WHEELING PLAN COMMISSION
THURSDAY, MAY 26, 2016 6:30 P.M.

AGENDA FOR A REGULAR MEETING OF THE PLAN COMMISSION
to be held in the Board Room of the Village Hall
2 Community Boulevard, Wheeling, Illinois

This meeting will stream live and be televised on Wheeling's Cable Channels 17 & 99

---

1. CALL TO ORDER

2. PLEDGE OF ALLEGIANCE

3. ROLL CALL

4. CHANGES TO THE AGENDA

5. CITIZEN CONCERNS AND COMMENTS

6. CONSENT ITEMS

A) Docket No. SCBA 16-11
Go Grooming
501 N. Wolf Road
Appearance Approval of a Wall Sign

7. ITEMS FOR REVIEW

A) Docket No. PC 16-2
Blooming Minds Academy
581 N. Wolf Road
Minor Site Plan & Appearance Approval of an Outdoor Play Space

B) Docket No. PC 16-7
Richelieu Foods
120 W. Dundee Road
Minor Site Plan & Appearance Approval of Outdoor Nitrogen Tanks

C) Docket No. 2016-9 (Continued from April 28, 2016; To be continued without discussion to a future date)
Medtec Healthcare
43 W. Dundee Road
Special Use-Site Plan Approval for Adult Day Service

D) Docket Nos. 2016-11 and PC 16-6
Northgate Crossing
100-600 Burlington Circle, 100-300 Hudson Court, 100 Wabash Way, and 267 Northgate Parkway
(2016-11) Approval of an Amendment to a Planned Unit Development for a Multi-Family Residential Development
(PC 16-6) Approval of Final Plat of Subdivision

E) Docket Nos. 2016-12AB&C
The Vape Room
516 N. Milwaukee Avenue
(2016-12A) Title 19, Zoning, Variation to Allow Two Principal Buildings on a Single Zoning Lot
(2016-12B) Special Use-Site Plan Approval to Establish a Tavern
(2016-12C) Special Use-Site Plan Approval to Establish a Medical Research Laboratory

8. APPROVAL OF MINUTES – May 12, 2016 (includes partial findings for Docket No. 2016-11 and findings for Docket No. 2016-10)

9. OTHER BUSINESS

10. ADJOURNMENT

IF YOU WOULD LIKE TO ATTEND A VILLAGE MEETING BUT REQUIRE AUXILIARY AID SUCH AS A SIGN LANGUAGE INTERPRETER, PLEASE CALL (847) 459-2600 AT LEAST 72 HOURS PRIOR TO THE MEETING.

Public Hearing Information
Wheeling Plan Commission Meeting
May 26, 2016
(Attachment to Agenda)

Docket No. 2016-9 John Kim, property owner, is seeking Special Use-Site Plan Approval as required under Title 19, Zoning, of the Wheeling Municipal Code, Chapter 19-06 Commercial Districts, Chapter 19-10 Use Regulations, Chapter 19-12 Site Plan Approval Requirements, and associated sections, in order to establish an Adult Day Service at 43 W. Dundee Road, which is zoned B-3 General Commercial and Office District.

Docket No. 2016-11 REVA Development Partners, LLC, applicant, is seeking an amendment to Ordinance No. 4876, which granted Final Planned Unit Development Approval for the Northgate Crossing Multi-Family Residential Development, for the purposes to amending the site plan and unit mix among the existing development and to expand the development to include 12 additional townhome units.

Docket No. 2016-12A,B&C Gary Levitas, owner, is seeking the following for the property at 516 N. Milwaukee Avenue, which is zoned B-3 General Commercial and Office District, in order to establish alcohol and food service at the existing retail business for the Vape Room and to establish a medical research lab at the existing rear warehouse building:

2016-12(A) Variation from Title 19, Zoning, of the Wheeling Municipal Code, Chapter 19.03 General Provisions, Section 19.03.070 Number of Buildings per Lot, Subsection A, Principal Buildings in All Districts, to allow more than one principal building on a zoning lot; and

2016-12(B) Special Use-Site Plan Approval as required under Title 19, Zoning, of the Wheeling Municipal Code, Chapter 19-06 Commercial Districts, Chapter 19-10 Use Regulations, Chapter 19-12 Site Plan Approval Requirements, and associated sections, in order to establish a tavern in the existing commercial building at the front of the property; and

2016-12(C) Special Use-Site Plan Approval as required under Title 19, Zoning, of the Wheeling Municipal Code, Chapter 19-06 Commercial Districts, Chapter 19-10 Use Regulations, Chapter 19-12 Site Plan Approval Requirements, and associated sections, in order to establish a medical research laboratory at the rear building of the property.

REQUEST FOR PLAN COMMISSION ACTION
STAFF PROJECT REVIEW

TO: Chairperson Ruffatto and Members of the Wheeling Plan Commission

FROM: Andrew C. Jennings, Director of Community Development
Brooke A. Jones, Senior Planner

RE: **Docket No. SCBA 16-11**
Go Grooming
501 N. Wolf Road
Appearance Approval of a Wall Sign

DATE OF REPORT: May 19, 2016

DATE OF MEETING: May 26, 2016

PROJECT OVERVIEW: The petitioner is seeking appearance approval of a wall sign for a new dog grooming facility.

LOCATION MAP:

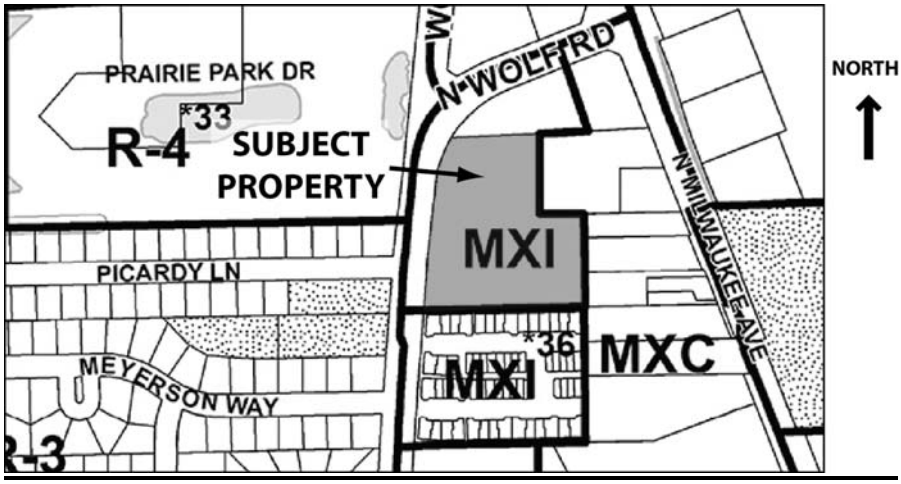

GENERAL PROPERTY INFORMATION

Applicant Name:	Eugene Tkachenko, business owner
Property Owner:	Eugene Tkachenko
Common Property Address:	501 N. Wolf Road (H.S.H. Business Condos)
Common Location:	Located on the east side of Wolf Road, at Picardy Lane
Neighboring Property Land Use(s):	North: Industrial/Office West: Single-Family Residential South: Multi-Family Residential East: Commercial

Comprehensive Plan Designation: Commercial-Residential Mixed Use

Existing Use of Property: Dog Grooming Facility

Existing Property Zoning: MXI Mixed Use Industrial District

Relevant Zoning Action on Property:
2016-7 Ordinance No. 5008, passed May 2, 2016, granted special use approval for an animal grooming facility.

PROJECT DESCRIPTION

The petitioner is requesting appearance approval to install a business identification wall sign for a newly approved dog grooming facility.

SIGNAGE PLAN REVIEW

Sign Location: The proposed sign will be located on the front façade, in the existing wall sign empty frame, facing east towards Wolf Road.

Sign Type and Size: The applicant is proposing to install a wall sign made of a white 0.2 inch thick alumacore panel with pink copy (outlined in black) and a black graphic. The sign will not be illuminated. The proposed sign is 8 feet by 2 feet (16 sq. ft.). The proposed sign meets the requirements of the Sign Code.

STAFF REVIEW

Impact on Adjacent Uses: No impact on adjacent uses is expected.

Staff Recommended Action: Staff recommends approval of the proposed wall sign.

PROPOSED MOTION

If the Plan Commission finds that the petitioner has satisfied the requirements for appearance approval of the wall sign, an appropriate motion would be to:

Approve Docket No. SCBA 06-11 to permit installation of the wall sign in accordance with the sign drawing submitted May 16, 2016 by Go Grooming, located at 501 N. Wolf Road, Wheeling, Illinois;

Andrew C. Jennings, AICP
Director of Community Development

Brooke A. Jones
Senior Planner

Attachment: Photo of existing conditions (staff)

Wall sign plan

Go Grooming – 501 N. Wolf Road

Docket No. SCBA 16-11 (Appearance Approval of Wall Sign)

Plan Commission Meeting – May 26, 2016

Existing conditions of facility – looking northeast

Sign for Go Grooming
at 501 N. Wolf Rd, Wheeling IL 60090

Exhibit received May 16, 2016

REQUEST FOR PLAN COMMISSION ACTION
STAFF PROJECT REVIEW

TO: Chairperson Ruffatto and Members of the Wheeling Plan Commission

FROM: Andrew C. Jennings, Director of Community Development
Brooke A. Jones, Senior Planner

RE: Docket No. PC 16-02
Blooming Minds Academy
581 N. Wolf Road
Minor Site Plan & Appearance Approval of Outdoor Play Space

DATE OF REPORT: May 18, 2016

DATE OF MEETING: May 26, 2016

PROJECT OVERVIEW: The petitioner is requesting minor site plan and appearance approval to construct an outdoor play space for the existing recreation and instruction facility. This item was tabled at the January 28, 2016 PC Meeting.

LOCATION MAP:

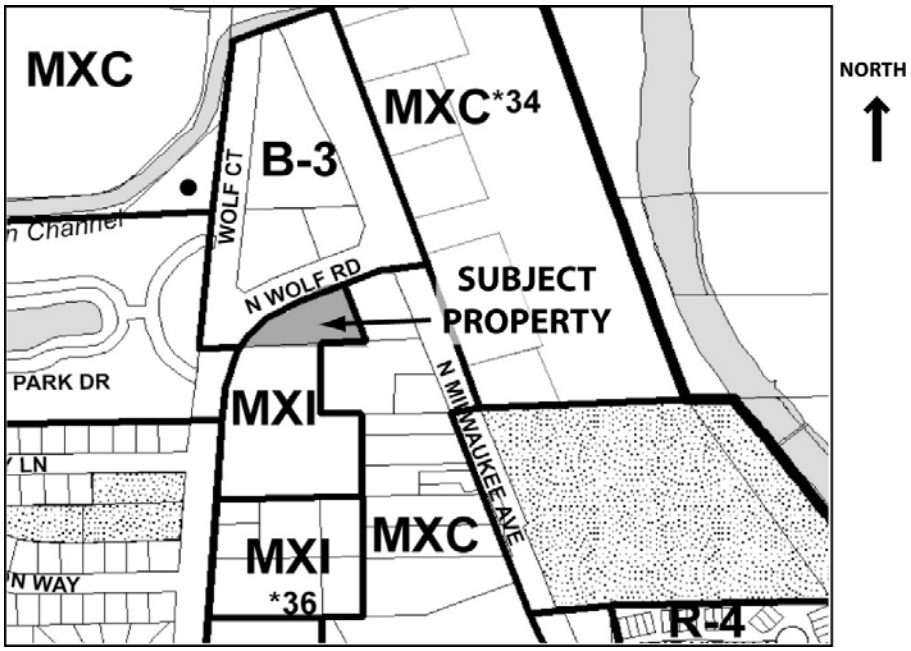

GENERAL PROPERTY INFORMATION

Applicant Name: Olga Khamichonak

Property Owner Name: Baker Holdings of Green Oaks, LLC

Common Property Address: 581 N. Wolf Road

Common Location:	Located at the eastern intersection of Wolf Court and Wolf Road
Neighboring Property Land Use(s):	North: Light industrial / office West: Multi-Family Residential South: Light industrial / office East: Commercial
Comprehensive Plan Designation:	Commercial
Property size:	45,767 sq. ft. for the entire site; 13,133 sq. ft. for the entire building; 1,650 sq. ft. leased building space
Existing Use of Property:	Recreation and Instruction Facility
Proposed Use of Property:	No change
Existing Property Zoning:	MXI Mixed Use Industrial

Previous Zoning Action on Property:

2012-13	Ordinance No. 4722, passed 9.17.2012, granted a Special Use for a Specialty School (Recreation and Instruction Facility).

BACKGROUND / DESCRIPTION OF PROPOSAL

On January 28, 2016, the petitioner attended the Plan Commission Meeting seeking minor site plan and appearance approval to construct an outdoor play space for the existing business. The review was tabled so that the petitioner could work on the following suggestions made by PC:

1. Provide written confirmation from DCFS stating the fencing requirements;
2. Provide a plan that shows the location of the gate; and
3. Provide the details of the locking mechanism for the gate.

The applicant proposes to build an outdoor play area for use within the parameters of the existing business, Blooming Minds Academy. This business has a special use permit that allows for education enrichment programs for children aged 1 to 17. No additional modifications are proposed to the existing space or operations.

The petitioner has now addressed the comments from the January 28th PC Meeting.

In addition, the property owner has approved the new outdoor play area site configuration.

SITE PLAN AND APPEARANCE REVIEW

General site layout: The petitioner is proposing to install fencing at the rear of the property to create an approximately 35-foot by 45-foot outdoor play area for children. The fenced area will be directly accessible to the subject unit (581) through an existing rear exit. The new site plan also shows the location of the gates. . The DCFS outdoor play area code requirements have also provided. The proposal appears to meet the requirements of DCFS.
The new play area configuration includes an area for infants/toddlers separate from preschool school-aged children.

Appearance review: The petitioner has provided fencing details. The new proposal includes a solid white vinyl fence (New Lexington style) that is 6-feet in height. Safety bollards will also be installed on the outside of the fence.

STAFF REVIEW

Fire Department Review: The Fire Department has received the resubmitted plans and has provided a comment memo dated May 18, 2016. These comments can be addressed at building permit.

Impact on adjacent uses: No impact on adjacent uses is expected.

Staff Recommended Action: Staff recommends approval of the proposed minor site changes.

PROPOSED MOTION

If the Plan Commission approves of the requested site modifications, an appropriate motion would be to:

Approve Docket No. PC 16-02 granting minor site plan and appearance approval for an outdoor play space in accordance with the following exhibits submitted May 16, 2016 (except as noted) by Blooming Minds Academy, located at 581 N. Wolf Road, Wheeling, Illinois:

- Cover letter
- Site plan, dated, 5.11.2016; and
- Fencing details (6 sheets).

Andrew C. Jennings, AICP
Director of Community Development

Brooke A. Jones
Senior Planner

Attachments:

Fire Department review, dated 5.18.2016

Photos of existing conditions (staff)

Cover letter

Site plan

Fencing details

MEMO – Fire Prevention Bureau

TO: Brooke Jones, Village Planner

FROM: Ronald S. Antor, Fire Inspector

CC: Andrew Jennings, Director of Community Development

Keith MacIsaac, Fire Chief

FPB File

DATE: May 18, 2016

SUBJECT: Proposed Outdoor Recreation Area – 581 North Wolf Road – Blooming Minds Academy – Plans received for review by the Fire Department, May 16, 2016.

The Wheeling Fire Department has reviewed the submittals received related to the above referenced project and has the following comments:

Site Plan

1. The plans submitted for review are for the addition of two fenced play areas for petitioners business. The play areas are located at the rear of a multi-tenant commercial building.
2. The Fire Department has reviewed the plans and has no objections to the project as shown if the following cade related safety items are provided:
    a. Protective bollards shall be provided on the south and west side of the play area (only south side shown in submittal) to provide a safety barrier against vehicles in the adjacent parking lot and drive. The installation of the protective bollards shall comply with the Fire Prevention Code (Section 312) for protective bollards.
    b. The fenced area directly adjacent to the building on the north side is part of the means of egress for the 581 N. Wolf Road tenant space.is part of the exiting system for the petitioners tenant space.
        i. A weatherproof lighted exit sign and emergency light shall be provided in the vicinity of gate at the northeast corner of the fenced area.
        ii. An emergency light shall be provided over the rear exit from the 581 N. Wolf Road tenant space.
    c. The gates referenced in the submittal documents shall meet the requirements in Chapter 10 of the Village's Fire Prevention Code. This would include:
        i. The use of padlocks to secure the gate would prohibited.
        ii. Latching hardware provided shall be lever type or a push bar to meet the requirements in Section 1008.1.9 of the Fire Prevention Code

        NOTE: Based on the documents submitted for review the petitioner would be in compliance.

3. The installation of the fencing for the preschool playground adjacent to the building's sprinkler room has a gate that does not meet the code requirements in Chapter 10, Section 1005.7.1 of the building code relating to encroachment for the "corridor" created in this area.

   To comply with this section of the code the following are acceptable solutions:

   a. Enlarge the width of the corridor from 5 feet to 8 feet.

   b. Have the gate at the southeast corner of the preschool playground swing into the play area instead out of it.

At this time there are no other Fire Department comments related to the project as presented in the documents reviewed.

Blooming Minds Academy – 581 N. Wolf Road

Docket No. PC 16-02 (Minor Site Plan and Appearance Approval of an Outdoor Play Space)

Plan Commission Meeting – January 28 , 2016 and May 26, 2016

Existing conditions of rear space – looking east

Blooming Minds Academy – 581 N. Wolf Road

Docket No. PC 16-02 (Minor Site Plan and Appearance Approval of an Outdoor Play Space)

Plan Commission Meeting – January 28 , 2016 and May 26, 2016

Existing conditions of rear space – looking northeast

May 10, 2016

Blooming Minds Academy
581 N. Wolf Rd.
Wheeling, IL 60090

Re: Fence Permit

Dear Committee:

I am attaching a revised blueprint of the proposed fence.

1. Previously, the committee advised to have a latch on the gate of the fence, so that children cannot access it. A lock will be added to address this concern.
2. To address the Fire Marshal's concern to the fact that the fence gate would also serve as an emergency exit (in which case it would only be allowed to have a push bar and not a lock), we moved the fence position, so that the fence does not block the existing emergency exit of the unit. Thus, we can now have a locked fence gate, which is what the Committee would prefer.
3. The Committee also wanted to see the DCFS requirements for the gate. Below, I have enclosed such requirements.

DCFS Standards for Licensing Day Care Centers

Section 407.390 Outdoor Play Area

f) All play space shall be fenced or otherwise enclosed or protected from traffic and other hazards. Fences shall be at least 48 inches in height (for fences installed or replaced after January 1, 1998). Fences shall be constructed in such a way that children cannot exit without adult supervision. Corral-type fences and fences made of chicken wire shall not be used.

4. The final question was regarding the material that will be used for the fence. It is called New Lexington in white, which is a vinyl fence. I am attaching a catalogue with this letter for your review.

At this time, I believe I have addresses all the previous concerns, and will be glad to address any other concerns if they arise in the future.

Thank you very much for your time and consideration.

Sincerely,
Olga V. Khamichonak

Exhibit received May 16, 2016

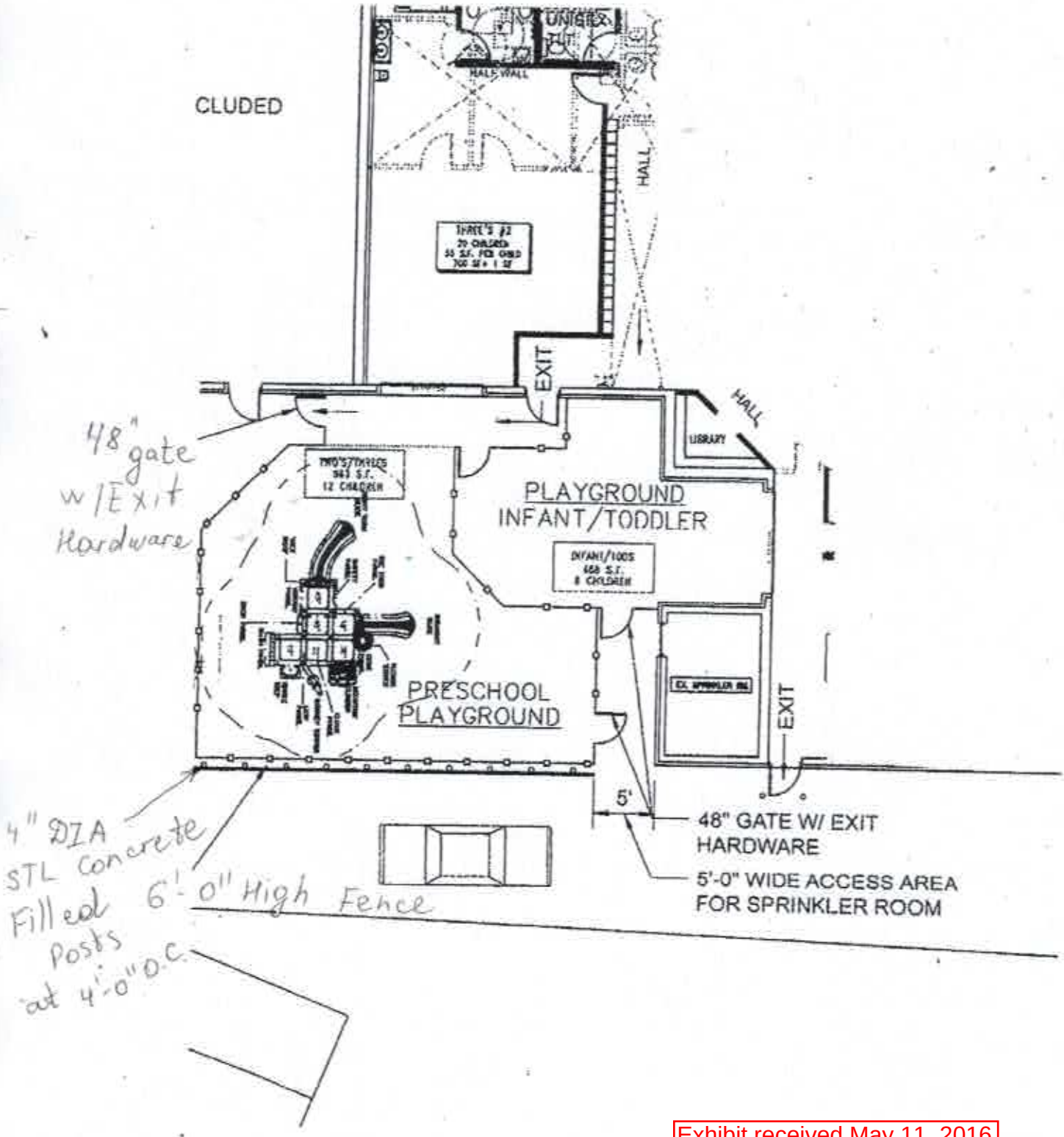

Exhibit received May 11, 2016

CertainTeed

Bufftech®

Vinyl Fence Products

CertainTeed
SAINT-GOBAIN

Exhibit received May 16, 2016

Shown here:
Chesterfield CertaGrain Texture and 4-Rail Post & Rail CertaGrain Texture in Sierra Blend

On Cover:
Chesterfield CertaGrain Texture with Lattice Accent in Sierra Blend

Page 4.

The Bufftech Advantage

The Leader in Aesthetics, Color & Performance

6.
Privacy
Galveston CertaGrain® & Smooth

8.
Privacy
Chesterfield CertaGrain®

12.
Privacy
Chesterfield CertaStucco™

14.
Privacy
Chesterfield Smooth

16.
Privacy
New Lexington

Exhibit received May 16, 2016

Privacy

Smart choice for the value

New Lexington

Steel Reinforced Bottom Rail

New Lexington offers dependable performance at an economical price, with features you'd expect to find on higher-end fence products. New Lexington includes Bufftech's signature "v" groove picket and Classic Curve deco rail design.

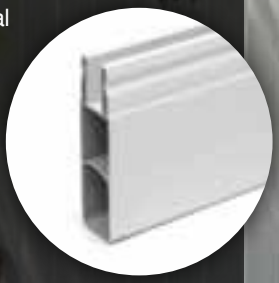

Distinctive Deco Rail Design

Heights: 4', 5' & 6'
Picket Style: 5/8" x 11-3/8" Tongue & Groove

White | Almond

Steel Reinforced Bottom Rail

with Swoop

Ideal for transitioning from low to high fence.

Heights: Transitions from 6' to 4'
Picket Style: 5/8" x 11-3/8" Tongue & Groove

White | Almond

Steel Reinforced Bottom Rail

with S Curve

Ideal for transitioning from low to high fence.

Heights: Transitions from 6' to 4'
Picket Style: 5/8" x 11-3/8" Tongue & Groove

White | Almond

Exhibit received May 16, 2016

New Lexington in White

Steel Reinforced Bottom Rail

with Lattice Accent

Heights: 4' 11" plus 1' 1" Accent
Picket Style: 5/8" x 11-3/8" Tongue & Groove

White | Almond

Steel Reinforced Bottom Rail

with Victorian Accent

Heights: 4' 11" plus 1' 1" Accent
Picket Style: 5/8" x 11-3/8" Tongue & Groove

White | Almond

Exhibit received May 16, 2016

Bufftech offers a wide selection of residential gates designed to match all of our fence styles, in a choice of heights and widths. Beautiful and durable, Bufftech gates deliver easy installation and great performance. Choose from unassembled gate kits or pre-assembled gates that ship ready to install.

Heavy Duty Aluminum Frame Construction

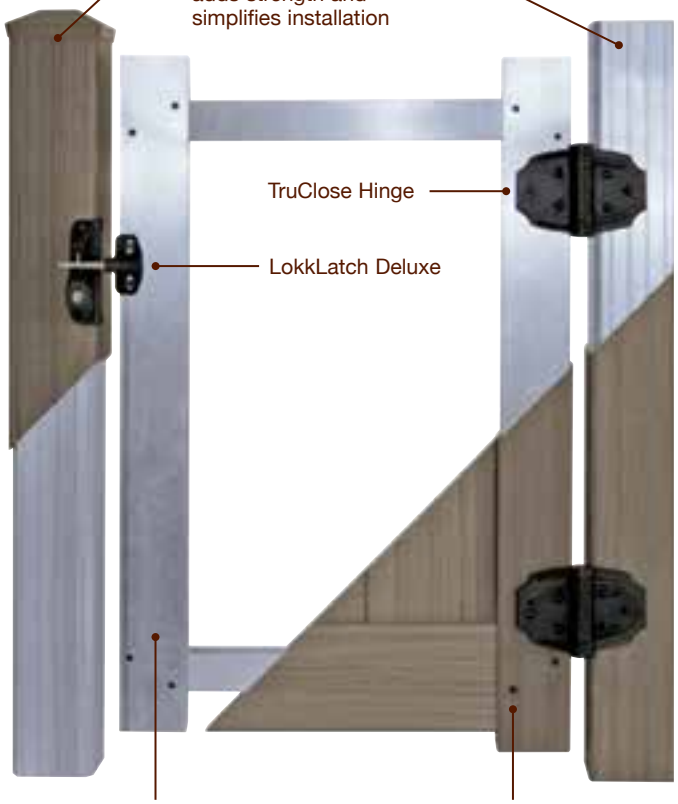

	Pre-Assembled Gate Widths	Unassembled Gate Kit Maximum Width	Extension Kit Required**
Galveston	50-1/2"	50-1/2"	No
Chesterfield	36-1/2" 50-1/2" 64-3/4"	70"	Yes
Chesterfield Concave Accent	50-1/2"	na	na
Chesterfield Convex Accent	50-1/2"	na	na
New Lexington	42-1/2" 50-1/2" 65-1/4"	72"	Yes
Imperial	50"	72"	Yes
Columbia*	50"	50"	No
Millbrook	50"	60"	Yes
Baron	50"	72"	Yes
Princeton	50"	72"	Yes
Countess	50"	72"	Yes
Monarch	50"	72"	Yes
Victorian	50"	72"	Yes
Manchester	50"	50"	No
Manchester Concave	na	50"	No
Canterbury	50"	50"	No
Danbury	50"	50"	No
Cape Cod	50"	60"	Yes
Rothbury	50"	50"	No
Yorkshire	50"	60"	Yes
2-Rail*	na	72"	na
3-Rail*	na	96"	na
4-Rail*	na	96"	na
Crossbuck*	na	96"	na

* All Gates are rackable, except Columbia, Post & Rail (2-Rail, 3-Rail and 4-Rail smooth finish), and Crossbuck styles.

** For unassembled gate kits over 50" wide to achieve maximum width

Exhibit received May 16, 2016

Stainless Steel Gate Hardware

Give your gate the old-world look of wrought iron with our rugged, rust-free stainless steel gate hardware. The hardware includes hinge, strike and latch and is available in Black Pebble.

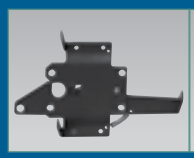

Strike and Latch

Hinge

LokkLatch® Key-Lockable Gate Latch, GateHandle™, MagnaLatch® Magnetic Safety Gate Latch, LokkLatch Magnetic® and TruClose® Self-Closing Gate Hinges are registered trademarks of D&D Technologies.

High Performance Nylon Gate Hardware Kits

Versatile and virtually maintenance free, our premium nylon gate hardware offers key lockable latches, self-closing hinges and contoured gate handles. Available in Black.

LokkLatch® Magnetic

LokkLatch® with External Access Kit

LokkLatch® Deluxe

MagnaLatch® Magnetic Safety Gate Latch

GateHandle™

TruClose® Adjustable, Self-Closing Gate Hinges

Performance Features	Bufftech Vinyl
Lifetime limited warranty	✔
Transferable warranty	✔
5-year labor warranty	✔
Dark color fade warranty	✔
Made in the USA	✔
Never needs painting or staining	✔
Won't chip, peel, crack or splinter	✔
Won't rot or support mold growth	✔
Impervious to termites/wood-boring insects	✔
Lead free	✔
No harmful chemicals	✔
High-quality raw materials	✔
Concealed fasteners	✔
Heavyweight pickets	✔
Wide choice of colors	✔
Woodgrain and stucco textures	✔
Steel reinforced rails	✔
Routed rails and posts	✔
Class A rating for flame spread	✔
Recycled Content	✔
Self-extinguishing	✔
Easy to assemble	✔
Building code compliant	✔
Meets ASTM standards	✔

Quality Assurance

Bufftech fence products undergo rigorous testing to ensure they are manufactured to the highest standards and will withstand the test of time.

Material

- Dimensional checks
- Wall thickness
- Cap stock thickness
- Color/gloss
- Impact
- Flex
- Tensile strength
- Accelerated weathering

Design

Railing code approvals

- Kingston – CCRR-0211
- Oxford – CCRR-0187
- Panorama® – CCRR-0115

Fence certifications

- Miami-Dade county approved NOA#:12-1106.11 (expires 3-13-2018)
- Gates load tested for 300lbs
- ASTM E 90 Sound Transmission Loss Test
- STC 21 (applies to Chesterfield and Galveston)

Building Responsibly with Bufftech

CertainTeed is actively pursuing strategies to reduce our environmental impact, while increasing the sustainability of our operations and products. By carefully examining all environmental impacts throughout each phase of a product's life cycle—from raw materials and manufacturing, to transportation and use, to disposal and/or recycling—we gain a complete, accurate view of our product's true sustainability. CertainTeed conducted a Life Cycle Assessment (LCA) that was submitted to the National Institute of Standards and Technology (NIST) and was published in the building product LCA database, BEES (Building for Environmental and Economic Sustainability). The findings from this Life Cycle Assessment provide a new, if not surprising, vantage point from which to make more credible and confident decisions on environmentally sound vinyl fence options.

NIST
National Institute of Standards and Technology
U.S. Department of Commerce

All Bufftech® products are GreenCircle Certified®, a third-party auditing process designed to assure builders, regulators and homeowners that Bufftech fence complies with our environmental and sustainability claims, including the recycled content of our product.

A SUSTAINABLE SOLUTION GreenCircle CERTIFIED RECYCLED CONTENT ®

Professional: facebook.com/CertainTeedFreedomofChoice
Consumer: facebook.com/CertainTeedLivingSpaces

[BeCertain] Confidence worth building on.™

ASK ABOUT OUR OTHER CERTAINTEED® PRODUCTS AND SYSTEMS:

ROOFING • SIDING • TRIM • DECKING • RAILING • FENCE
GYPSUM • CEILINGS • INSULATION

www.certainteed.com http://blog.certainteed.com

CertainTeed Corporation
20 Moores Road
Malvern, PA 19355

Professional: 800-233-8990
Consumer: 800-782-8777

© 1/16 CertainTeed Corporation, Printed in U.S.A.
Code No. 40-40-70610

SAINT-GOBAIN

Exhibit received May 16, 2016

REQUEST FOR PLAN COMMISSION ACTION
STAFF PROJECT REVIEW

TO: Chairperson Ruffatto and Members of the Wheeling Plan Commission

FROM: Andrew C. Jennings, Director of Community Development
Brooke A. Jones, Senior Planner

RE: **Docket No. PC 16-7**
Richelieu Foods
120 W. Palatine Road
Minor Site Plan and Appearance Approval for Nitrogen Tanks

DATE OF REPORT: May 19, 2016

DATE OF MEETING: May 26, 2016

PROJECT OVERVIEW: The petitioner, Richelieu Foods, is requesting minor site plan and appearance approval for the construction of nitrogen tanks at the side of the property, which is located in the I-2 Limited Industrial District and I-3 General Industrial District.

LOCATION MAP:

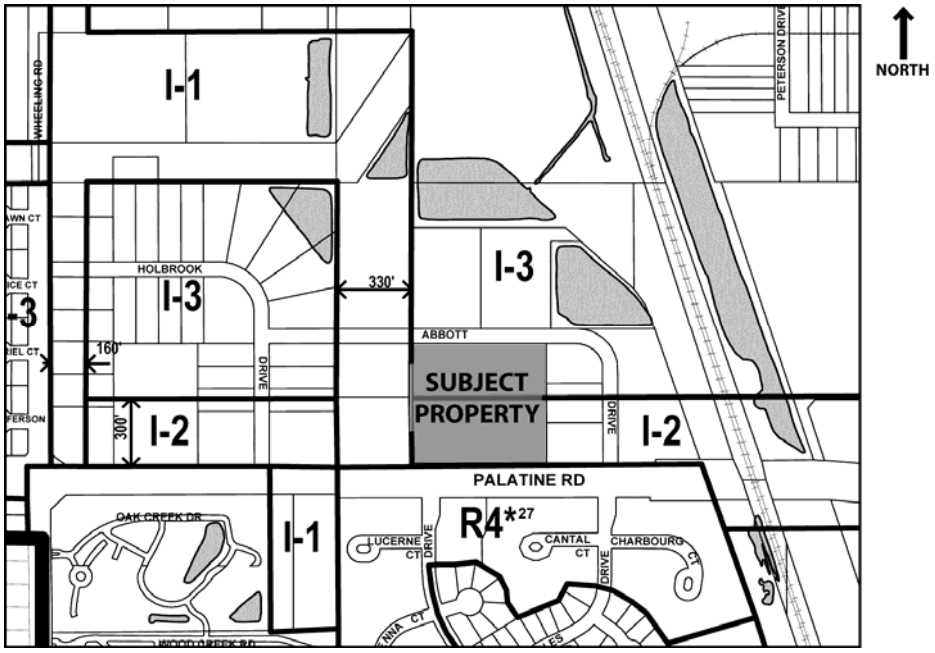

GENERAL PROPERTY INFORMATION

Applicant Name:	Joe Blanchard, Meridian Design Build LLC
Property Owner Name:	120 Palatine LLC
Common Property Address:	120 W. Palatine Road
Common Location:	Located west on Palatine Road, between Abbott Drive and Holbrook Drive

Neighboring Property Land Use(s):	North: Industrial West: Industrial South: Multiple-Family Residential East: Industrial
Comprehensive Plan Designation:	Industrial
Property size:	317,196 sq. ft. (property) 91,940 sq. ft. (building)
Existing Use of Property:	Medium manufacturing
Proposed Use of Property:	No change
Existing Property Zoning:	I-2 Limited Industrial / I-3 General Industrial

Previous Relevant Zoning Action on Property:

PC 492 Ordinance No. 3415, passed October 4, 1999, granted site plan and appearance approval for a building addition.

DESCRIPTION OF PROPOSAL

Richelieu Foods, which is a new tenant that produces frozen pizzas, salad dressings, and sauces, requires large liquid nitrogen tanks for its operations. The applicant is requesting minor site plan and appearance approval to install two large nitrogen tanks and accessory equipment on the west side of the building. The tanks and equipment will be fenced by 6-foot high screening.

SITE PLAN REVIEW

Scale of Site Plan: not to scale.

General Site Layout: The site will remain generally in its current configuration. However, on the west side of the site two nitrogen tanks (each with a 10’2” diameter) and accessory apparatus will be installed.

Elevation view: Two tanks surrounded by chain link fencing are proposed. The tanks are 36’2” feet in height and are located on 6-foot legs for a total height of 42’2”. An elevation plan is provided. A photograph of a similar project is also provided as an example of how it will look.

Ownership: No change in ownership is proposed. Richelieu leases the property.

Fencing: A 6-foot high chain link fence is proposed to surround the tanks and other equipment. The fencing is 38-feet by 15 feet in area. Brown privacy slats (high density polyethylene) will provide privacy.

STAFF REVIEW

Fire Department Review: The Fire Department has received a copy of the plans and has provided the attached comment memo dated May 18, 2016. These comments will be addressed at building permit.

Impact on adjacent uses: The expansion of the existing operation appears to have no impact on adjacent uses.

Staff Recommended Action: Staff recommends approval of the minor site plan modifications.

PROPOSED MOTION

If the Plan Commission finds that the petitioner has satisfied the requirements for the granting of the minor site plan approval, an appropriate motion would be to:

Approve Docket No. PC 16-7 granting Minor Site Plan and Appearance Approval to construct two nitrogen tanks at the subject property in accordance with the following exhibits submitted May 18, 2016 (except as noted), on behalf of Richelieu Foods, located at 120 W. Palatine Road, Wheeling, Illinois:

- Overall site plan, dated 5.19.2016,
- Partial site plan and details (3 sheets),
- Elevation plan, dated 5.19.2016,
- Fencing details (4 sheets),
- Privacy slat details, and
- Photograph of similar project.

Andrew C. Jennings, AICP
Director of Community Development

Brooke A. Jones
Senior Planner

Attachments: Fire Department Comments, dated 5.18.2016

Photo of existing conditions (staff)

Overall site plan

Partial site plan and details

Elevation plan

Fencing details

Privacy slat details

Photograph of similar project

MEMO – Fire Prevention Bureau

TO: Brooke Jones, Associate Planner

FROM: Ronald S. Antor, Fire Inspector

CC: Andrew Jennings, Village Planner

Mark Janeck, Director of Community Development

Keith MacIsaac, Fire Chief

FPB File

DATE: May 18, 2016

SUBJECT: Installation of two liquid nitrogen storage tanks in the parking lot of existing industrial structure – Richelieu Foods – 120 West Palatine Road – Plans received for review by the Fire Department, May 18, 2016.

The Wheeling Fire Department has reviewed the submittals received related to the above referenced project and has the following comments:

Site Plan

1. The site plan documents presented for review shows the installation of two liquid nitrogen storage tanks. Both tanks are 40' high (36' container and 6' legs) x 10' in diameter located adjacent to the structure on the west side of the building.
2. The installation of the storage tanks and all associated piping shall comply with the Village's Fire Prevention and Building Codes. This would include the requirements in Chapter 55 of the Fire Prevention Code which includes, but is not limited to the following:
    a. All tanks shall be marked in accordance with Section 5503.4 of the Fire Prevention Code.
    b. All emergency shutoff valves shall be clearly identified.
    c. The containers shall be secured to a foundation in accordance with the Village's Building (IFC Section 5503.5.2) Code. The petitioners proposed mounting system shall be reviewed during the permitting process.
    d. Access to the tanks shall be secured against unauthorized entry. Keys for the gates to the secured area shown on the submittal shall be provided to the Fire Department to be included in the building's existing Knox Box.
3. The petitioner and their contractors met with the Fire Department on May 18, 2016 to describe their proposed installation and address any concerns that the Fire Department may have.

At this time there are no other Fire Department comments related to the project as presented in the documents reviewed.

Richelieu Foods – 120 W. Palatine Road

Docket No. PC 16-7 (Minor Site Plan and Appearance Approval of Outdoor Nitrogen Tanks)

Plan Commission Meeting – May 26, 2016

Existing conditions of west side of facility – looking east

RICHELIEU FOODS, INC

WHEELING 120 WEST PALATINE ROAD ILLINOIS

Exhibit received May 18, 2016

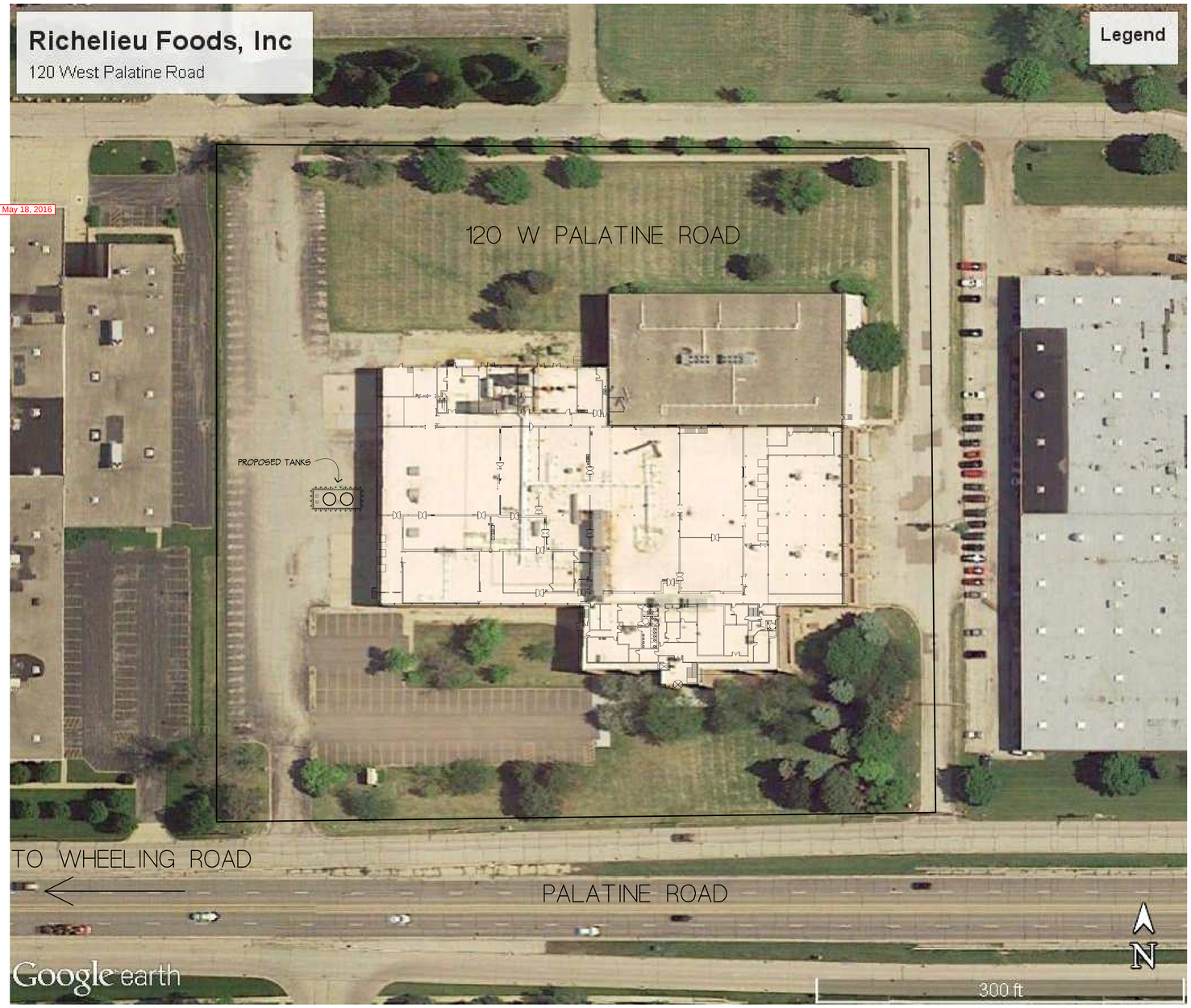

SITE PLAN

SCALE: N.T.S.

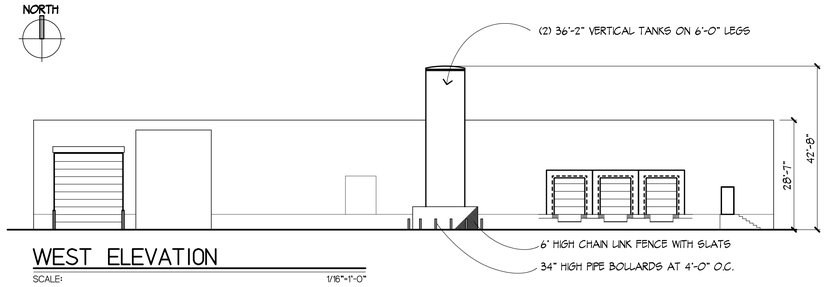

WEST ELEVATION

SCALE: 1/16"=1'-0"

Meridian DESIGN BUILD
www.meridiandb.com 847-374-9200

HARRIS ARCHITECTS, INC.
WWW.HARRISARCHITECTS.COM 847.303.1155

NEW TENANT IMPROVEMENTS FOR:
RICHELIEU FOODS, INC.
120 W. PALATINE ROAD, WHEELING ILLINOIS

PROPOSED TANKS

5-18-2016

IN PROGRESS

PROJECT NO. 25492
DRAWN BY: FDC
DATABASE: 25492DB

SHEET NO.
TANKS
__OF__SHEETS

PROJECT DESIGN CRITERIA

1). REFERENCE THE "BILL OF MATERIAL" ON THIS SHEET. THE SITE WORK, ie CIVIL, ELECTRICAL, PERMITTING etc, SHOWN. THE PRODUCT SUPPLY SYSTEM, ie TANK, VAPORIZERS & INTERCONNECTING PIPING, IS THE RESPONSIBILITY AND IS OWNED by "PRAXAIR INC"..

2). ALL ACCESS ROADWAYS ARE THE RESPONSIBILITY OF THE CUSTOMER AND ARE TO BE CAPABLE OF SUPPORTING 80,000 lbs. AASHTO HS-20 LOADING.

3). THIS FOUNDATION SYSTEM IS DESIGNED ASSUMING THE FOLLOWING CONDITIONS; 2000 psf SOIL BEARING CAPACITY
(IBC 2012) 115 MPH WIND LOAD EXPOSURE 'C'
SEISMIC VALUES: Ss=13.1 S1=5.9

NORMAL WATER TABLE CONDITIONS IN ACCORDANCE WITH A.C.I.318 LATEST EDITION FOR CONDITIONS OUTSIDE THESE CRITERIA IT IS THE CUSTOMERS RESPONSIBILITY TO PROVIDE SUITABLE FOUNDATION DESIGNS THAT MUST BE APPROVED BY "PRAXAIR INC" BEFORE CONSTRUCTION.

4). CONTRACTOR TO REMOVE TOPSOIL UNTIL A SUITABLE BASE IS ESTABLISHED FOR GRAVEL UNDERLAYMENT IF CONDITIONS CANNOT BE MEET AT DRAWING DEPTHS.

5). CONTRACTOR TO USE AIR ENTRAINED, 4"-5" SLUMP CONCRETE;
ASTM #C-150 TYPE I, FC=4500psi @ 28 DAYS.
OR
ASTM #C-150 TYPE III, FC=4500psi @ 7 DAYS.

6). ROUND EDGES OF PADS WITH SIDEWALK EDGING TOOL.

7). TOP OF PADS TO BE BROOM FINISHED AND LEVEL, ALL PAD ELEVATIONS TO BE REFERENCED FROM CHOSEN BENCHMARK.

8). SKIRTING OF PAD TO BE BELOW FROST LINE PER LOCAL BUILDING CODES.

9). BUMPER POSTS TO BE FILLED WITH CONCRETE. IN MULTIPLE POST INSTALLATIONS, ALL POST TOPS ARE TO BE IN A LINE.

10). BUMPER POSTS TO BE PAINTED; BLAST=SSPC-SP6
PRIME=2.5mil RED OXIDE
PAINT=2.5mil SAFETY YELLOW
W/3 STRIPS OF REFLECTIVE

11). ALL OUTDOOR RECEPTACLES AT SITE TO BE PROTECTED WITH GROUND FAULT INTERRUPTERS.

12). ALL ELECTRICAL COMPONENTS NOT INSTALLED WITHIN A BUILDING MUST BE IN WEATHERTIGHT ENCLOSURES.

BILL of MATERIAL

ITEM	QTY	U/M	DESCRIPTION	SUPPLIER
1	2	EA	VESSEL CRYOGENIC STORAGE, TL-13000 NITROGEN (6' LEG EXTENSIONS)	PRAXAIR
2	1	EA	VAPORIZER, ATMOSPHERIC PRODUCT, THERMAX SG20HF	PRAXAIR
3	1	EA	VAPORIZER, ATMOSPHERIC PRESSURE BUILDING, 820	PRAXAIR
4	1	EA	DUAL PRESSURE CONTROL MODULE	PRAXAIR
5	1	EA	REMOTE TELEMETRY UNIT, WIRED TRACKER	PRAXAIR
6	1	EA	LEVEL TRANSMITTER	PRAXAIR
7				
8	2	EA	MODULE, EXTENDED FILL w/ STAND	PRAXAIR
9	AS REQ'D		PIPE, 6" SCH 40 x 72" lg, (MIN) C-STL	CUSTOMER
10	AS REQ'D		LOW VOLTAGE SIGNAL WIRE, 2 PAIR, BELDON OR EQUIVALENT	CUSTOMER
11	AS REQ'D		BAR, NO.7, ASTM TYPE A-615, GRADE 60	CUSTOMER
12	AS REQ'D		BAR, NO.6, ASTM TYPE A-615, GRADE 60	CUSTOMER
13	AS REQ'D		BAR, NO.5, ASTM TYPE A-615, GRADE 60	CUSTOMER
14	AS REQ'D		FENCE, CHAIN LINK, 9 GA. X 72" HIGH	CUSTOMER
15	1	EA	GATE, SLIDING, 72" WIDE MIN, CHAIN LINK, 9 GA. X 72" HIGH	CUSTOMER
16	1	EA	GATE, SWING 36" WIDE MIN, CHAIN LINK, 9 GA. X 72" HIGH	CUSTOMER
17	AS REQ'D		CONCRETE, SEE NOTE # 5.	CUSTOMER
18	1	EA	120 VOLT/ 15 AMP POWER STUB-UP FOR PCM	CUSTOMER
19	1	EA	COMMUNICATIONS STUB UP, DEDICATED USE, VOICE GRADE TELEPHONE	CUSTOMER
20	1	EA	120 VOLT/ 15 AMP POWER STUB-UP w/ GFI DUPLEX OUTLET	CUSTOMER
21				
22				
23				
24				
25				

PRAXAIR NEW EQUIPMENT TABLE

EQUIPMENT		REMARKS	DIMENSIONS (in)			WEIGHT (pounds)		ANCHOR BOLTS (in)		
ITEM	NAME		Length	Width	Height	Empty	Full	Type	Diameter	Minimum Embedment
1	TM-13,000 LN2 Vertical Tank	on new foundation	122	= dia.	434	50,000	138,000	HILTI HIT-HY 200 Adhesive	0.5	10
2	SG20HF Vaporizers	on new foundation	22	22	128	135	N/A			

FOR CONSTRUCTION

ALTRN	ALTERATION	BY	DATE	CHKD	REVD	APVD/ REL	ALTRN	ALTERATION	BY	DATE	CHKD	REVD	APVD/ REL	ALTRN	ALTERATION	BY	DATE	CHKD	REVD	APVD/ REL	ALTRN	ALTERATION	BY	DATE	CHKD	REVD	APVD/ REL
2	MOVED PAD 13' WEST TO AVOID UTILITIES ROTATED PAD LAYOUT 180° PER SALE REQUEST	JPG	5/12/16	DJB	I	DJB	1	ROTATED PAD LAYOUT 90° PER SALE REQUEST	JPG	5/10/16	DJB	I	DJB														

PRAXAIR BUSINESS CONFIDENTIAL
MIDWEST SERVICE CENTER – EAST CHICAGO, INDIANA

TYPE OF PLANT: NITROGEN SYSTEM

TITLE: SYSTEM LAYOUT & FOUNDATION
RICHELIEU FOODS
WHEELING, IL

MODEL NAME: I

SIZE: B

DRAWN BY	CHECKED	SITE IDENTIFICATION
JPG	DJB	–
REVIEWED	APPROVED/ RELEASED	PRAXAIR OR PROJECT NUMBER
–	DJB	2379570
SCALE	DATE	SHEET / TOT. SHTS.
N.T.S.	4/21/16	1 / 3
DRAWING NUMBER		ALTERATION
–		2

Exhibit received May 18, 2016

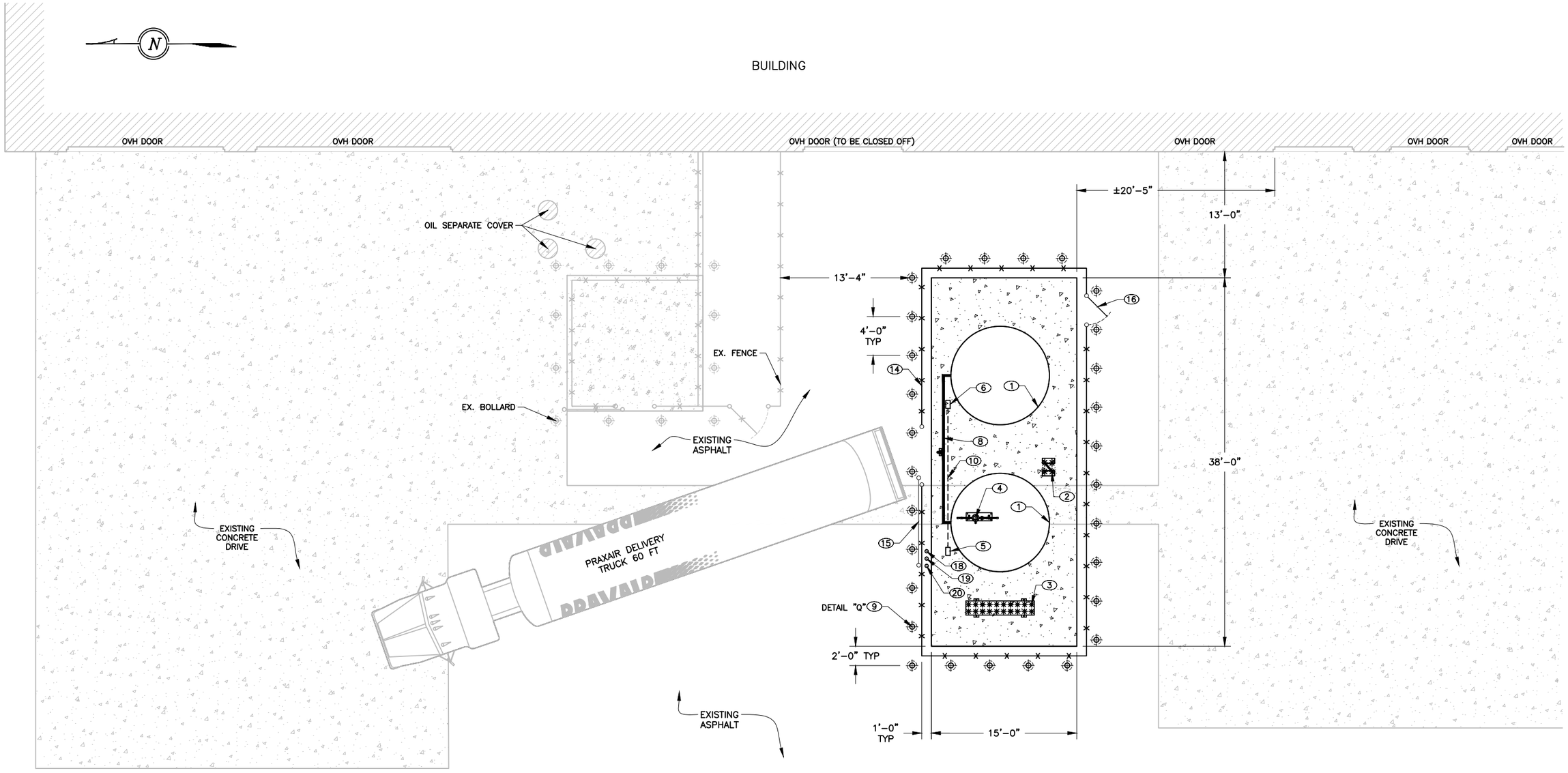

FOR CONSTRUCTION

PRAXAIR BUSINESS CONFIDENTIAL
MIDWEST SERVICE CENTER – EAST CHICAGO, INDIANA

TYPE OF PLANT: NITROGEN SYSTEM

TITLE: SYSTEM LAYOUT & FOUNDATION
RICHELIEU FOODS
WHEELING, IL

DRAWN BY	CHECKED	SITE IDENTIFICATION
JPG	DJB	–
REVIEWED	APPROVED/RELEASED	PRAXAIR OR PROJECT NUMBER
–	DJB	2379570
SCALE	DATE	SHEET / TOT. SHTS.
N.T.S.	4/21/16	2 / 3
SIZE	DRAWING NUMBER	ALTERATION
B	–	2

MODEL NAME: 1

ALTRN	ALTERATION	BY	DATE	CHKD	REVD	APVD/REL	ALTRN	ALTERATION	BY	DATE	CHKD	REVD	APVD/REL	ALTRN	ALTERATION	BY	DATE	CHKD	REVD	APVD/REL	ALTRN	ALTERATION	BY	DATE	CHKD	REVD	APVD/REL

Exhibit received May 18, 2016

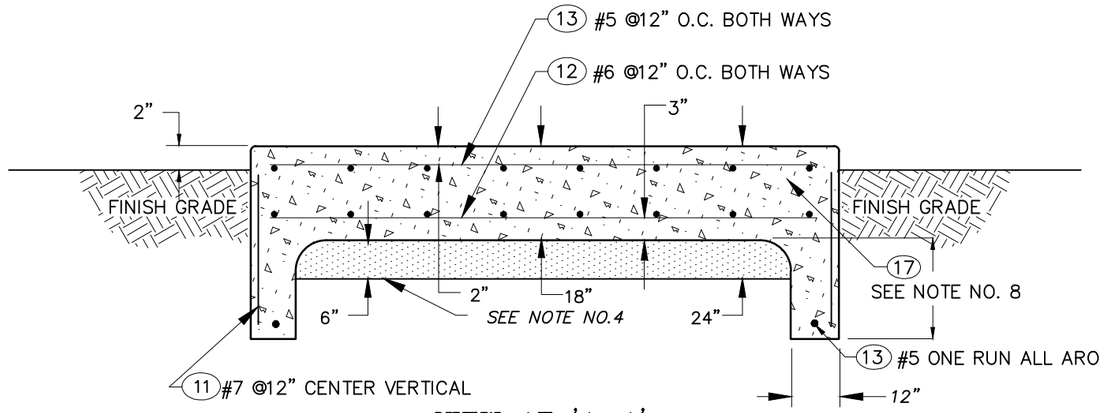

VIEW AT 'A–A'
CONCRETE EQUIPMENT PAD
NO SCALE

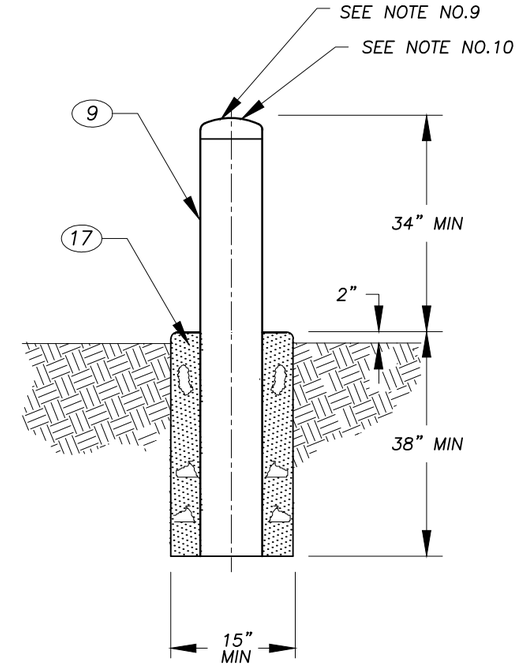

DETAIL"Q"
BUMPER POST
NO SCALE

FOR CONSTRUCTION

ALTRN	ALTERATION	BY	DATE	CHKD	REVD	APVD/REL	ALTRN	ALTERATION	BY	DATE	CHKD	REVD	APVD/REL	ALTRN	ALTERATION	BY	DATE	CHKD	REVD	APVD/REL	ALTRN	ALTERATION	BY	DATE	CHKD	REVD	APVD/REL

PRAXAIR BUSINESS CONFIDENTIAL
MIDWEST SERVICE CENTER – EAST CHICAGO, INDIANA

TYPE OF PLANT: NITROGEN SYSTEM

TITLE: SYSTEM LAYOUT & FOUNDATION
RICHELIEU FOODS
WHEELING, IL

MODEL NAME: I

DRAWN BY	CHECKED	SITE IDENTIFICATION
JPG	DJB	–

REVIEWED	APPROVED/RELEASED	PRAXAIR OR PROJECT NUMBER
–	DJB	2379570

SCALE	DATE	SHEET	TOT. SHTS.
N.T.S.	4/21/16	3	3

SIZE	DRAWING NUMBER	ALTERATION
B	–	2

Exhibit received May 18, 2016

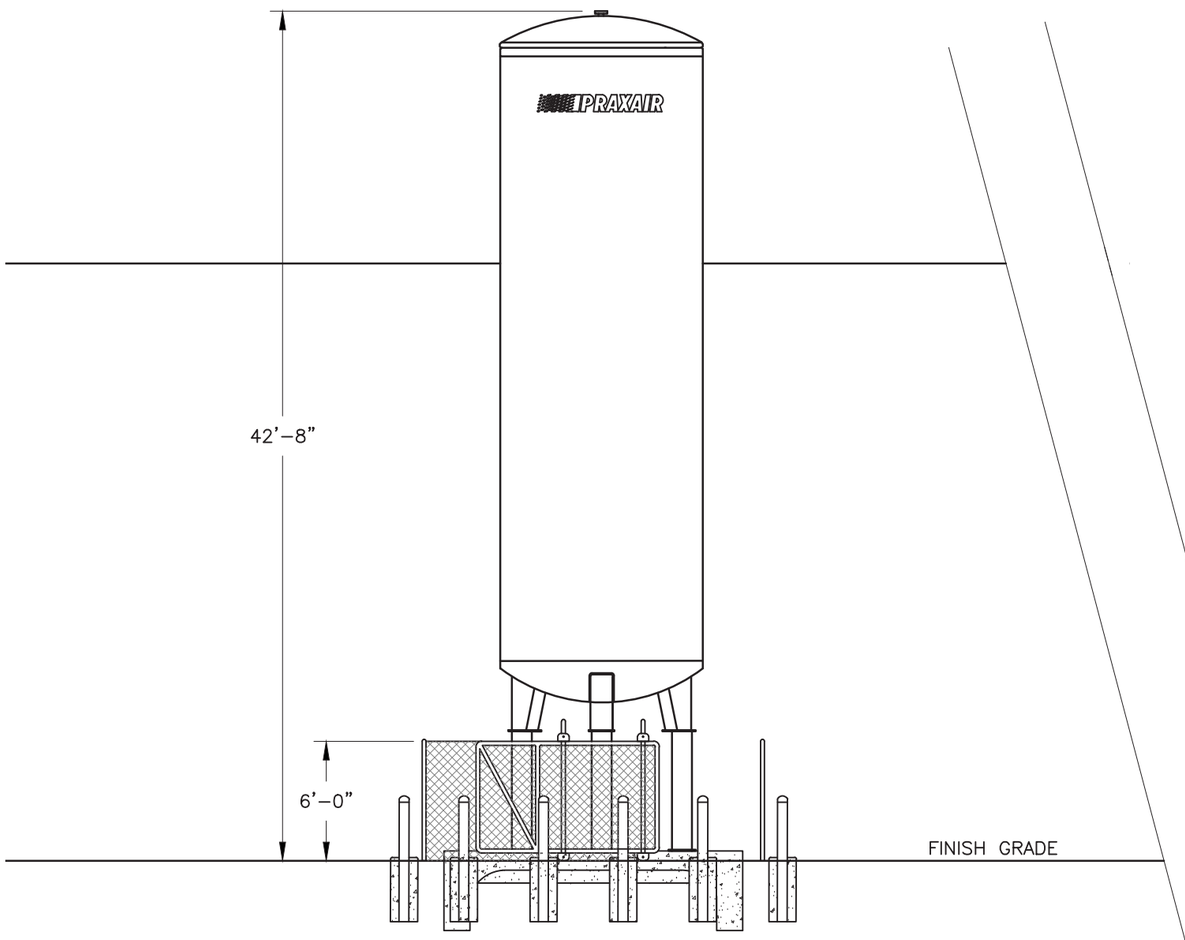

ELEVATION LOOKING EAST

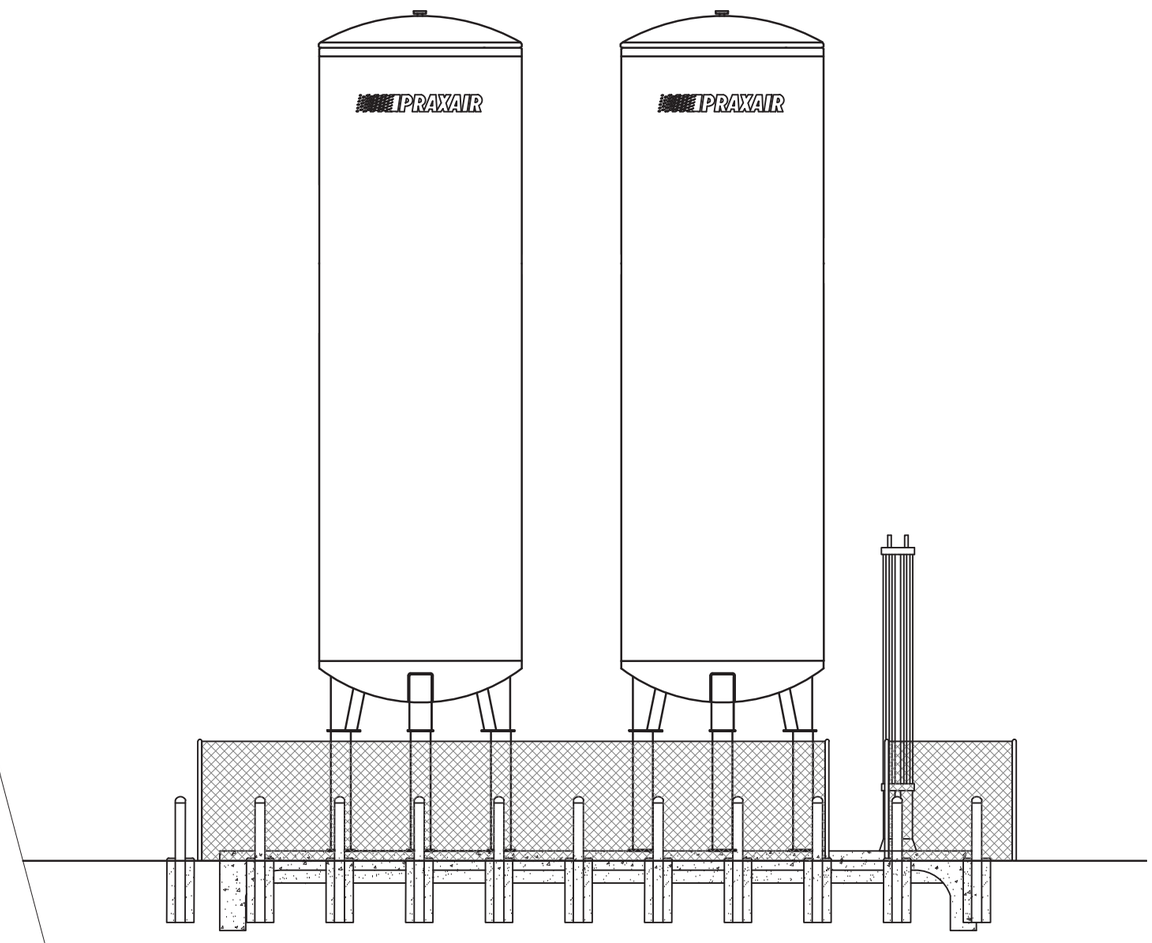

ELEVATION LOOKING NORTH

FOR CONSTRUCTION

Received May 19, 2016

ALTRN	ALTERATION	BY	DATE	CHKD	REVD	APVD/ REL	ALTRN	ALTERATION	BY	DATE	CHKD	REVD	APVD/ REL	ALTRN	ALTERATION	BY	DATE	CHKD	REVD	APVD/ REL	ALTRN	ALTERATION	BY	DATE	CHKD	REVD	APVD/ REL

PRAXAIR BUSINESS CONFIDENTIAL
MIDWEST SERVICE CENTER – EAST CHICAGO, INDIANA

TYPE OF PLANT: NITROGEN SYSTEM

TITLE: ELEVATIONS
RICHELIEU FOODS
WHEELING, IL

MODEL NAME: –

SIZE: B

DRAWN BY	CHECKED	SITE IDENTIFICATION
JPG	DJB	–
REVIEWED	APPROVED/ RELEASED	PRAXAIR OR PROJECT NUMBER
–	DJB	2379570

SCALE	DATE	SHEET	TOT. SHTS.
N.T.S.	5/18/16	1	1

DRAWING NUMBER: –

ALTERATION: 1

MM102GAW
Version5/03

MERCHANTS METALS

The First Name In Fence

GALVANIZED AFTER WEAVING (GAW) FABRIC

Nothing Beats the Complete Zinc Coating of GAW Chain Link Fabric for Durability and Rust-Prevention

- Meets ASTM Specification A 392
- 15 Year Warranty
- Maintenance Free

Exhibit received May 18, 2016

MERCHANTS METALS

Ask For GAW Every Time

GAW Chain Link Fabric provides exceptional security and protection in commercial, industrial, institutional, recreational and residential fencing applications. GAW also provides the best protection against corrosion in even the most severe coastal industrial environments. Hot dip zinc galvanizing is a simple process with over 200 years of proven effectiveness in millions of applications worldwide.

There are other zinc galvanizing processes and other metallic coatings, but none surpass GAW in durability and protection. It's a premium product providing superior corrosion and rust-resistance that doesn't cost a premium price.

THE IMPORTANCE OF GAW

GAW fabric is the only chain link fabric that's coated after weaving, ensuring that all surfaces of the base metal are protected. With GAW coatings, you have complete protection against rust and corrosion and an additional after coating treatment is applied to prevent white rust and early deterioration.

With any pre-coated wire, the weaving process leaves the twist and knuckle tips bare from trimming. Cut ends may be dipped in other materials, but they are no substitute for the thorough zinc coating protection of the GAW process.

THE DURABILITY OF GAW

Fabric galvanized after weaving is manufactured to the demanding requirements of ASTM specification A 392, which offers two classes of coating: Class 1 which has 1.2 ounces (366 g/m²) of zinc coating per sq. ft., and Class 2 which has 2.0 ounces (610 g/m²) of zinc coating per sq. ft. The effective service life of a fabric is directly related to the coating thickness – the thicker the coating, the longer the life. A Class 2 GAW coating is unsurpassed among metallic chain link fence coatings in providing long-term barrier and cathodic protection. That's a value you can measure.

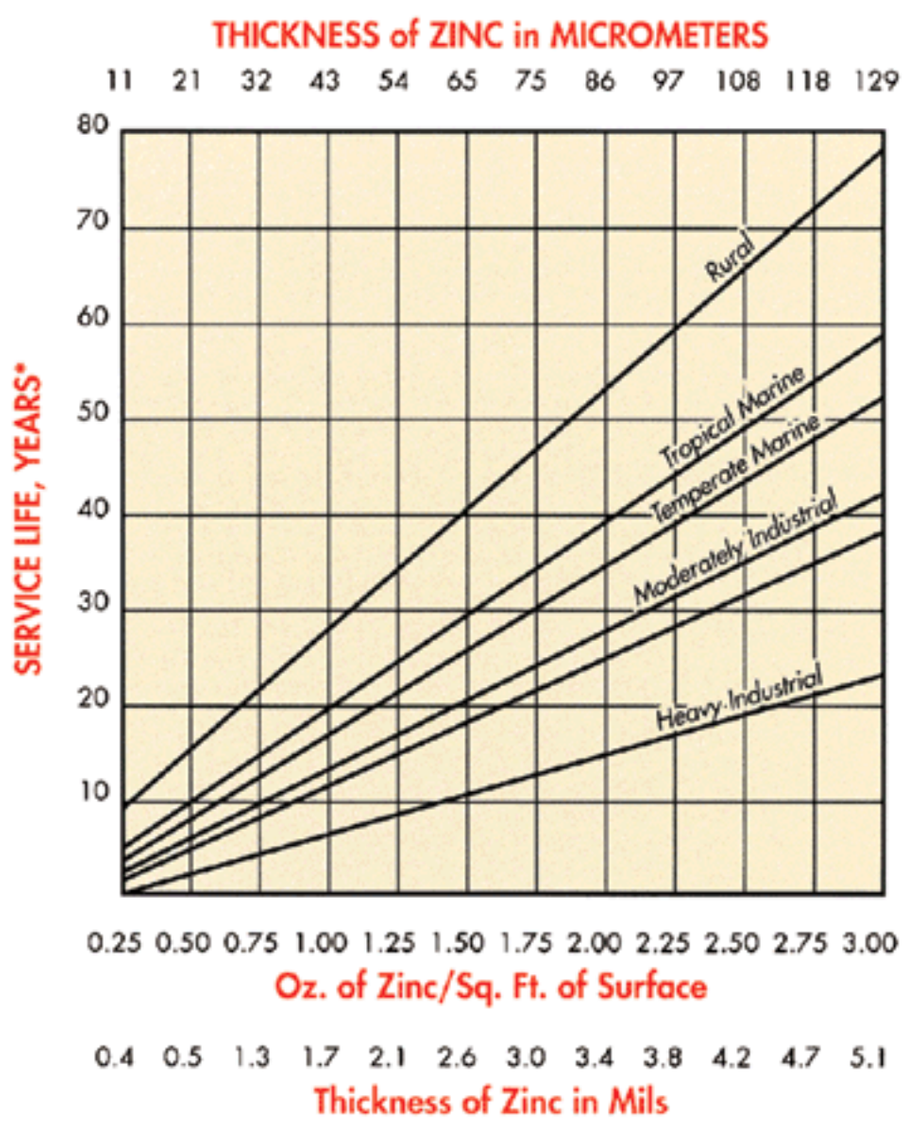

*Service Life is defined as the time to 5% rusting of the steel surface.

Chart used with permission of the American Galvanizers Association.

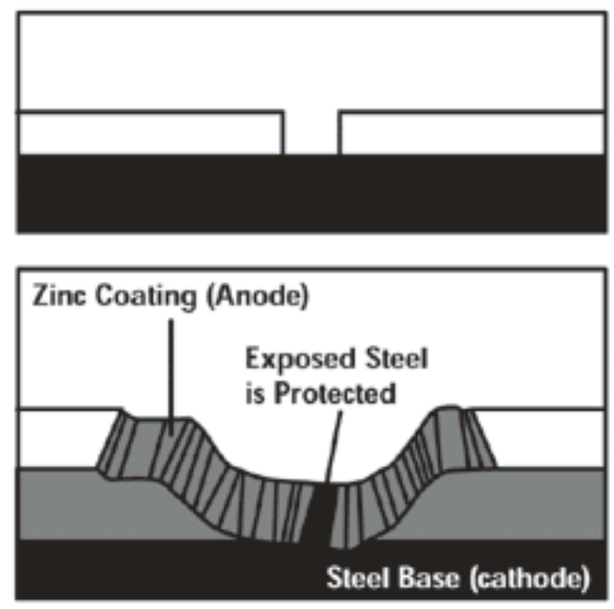

This is what happens to a scratch on galvanized steel. The zinc coating sacrifices itself slowly by galvanic action to protect the base steel. This sacrificial action continues as long as any zinc remains in the immediate area.

THE "SELF-HEALING" OF GAW

All zinc coatings have "self healing," or cathodic properties which protect exposed core metal. Even after years of wear, the remaining zinc stays alive. Of all metals used for protective coating of steel, zinc is the most electrochemically active in all environments, from mild rural to harsh marine and heavy industrial.

In other words, zinc provides a far superior coating in both barrier and cathodic protection... and GAW fabric provides the best of both.

THE FINISH OF GAW

Committed to their product, GAW producers assure you of chain link fabric with a complete coating. A continuous vertical dip and retrieval process removes excess zinc and keeps joints from welding.

THE VALUE OF GAW

When specifying chain link fabric, insist on GAW produced in accordance with ASTM A 392. If you're looking for durability and rust-prevention, there's no better chain link fencing than GAW. Fewer long-term maintenance problems mean lower long-term costs and greater life cycle savings. Pound for pound, GAW fabric is by far your best value.

GAW Benefits

1. Zinc-based process offers the most active cathodic protection
2. Heavier and more thorough coating with no flaking and bare trim ends
3. Additional protective coating to prevent white rust
4. All components of GAW fence systems are zinc coated
5. Consistently meets ASTM specifications
6. Established manufacturers produce consistent quality
7. Proven technology for 200 years
8. 15 Year Warranty
9. Lower long-term costs
10. Fewer long-term maintenance problems

Pre-coated fabric with uncoated tips. With pre-coated fabric, some manufacturers coat the bare ends, but many don't. No one coats the ends with the same material that protects the rest of the fabric.

GAW fabric. The GAW process guarantees that cut ends will be coated with the same quality material and protection as the rest of the fabric. The pre-coated process provides no such guarantee.

GAW CHAIN LINK FENCING, A POPULAR CHOICE OF LANDSCAPE ARCHITECTS.

GAW Chain Link Fencing is resistant to defacement and offers total visibility. But when combined with landscaping, chain link provides an attractive visual barrier while maintaining security.

SECTION 02831 (GAW)
Galvanized After Weaving (GAW) Fabric Specifications

PART 1 GENERAL

1.01 SECTION INCLUDES

A. Galvanized after weaving (GAW) coated chain link fencing and accessories.

1.02 SUBMITTALS

A. Changes in specifications may not be made after the published date of bid. All submittals of substitutions must be approved before bid date.

B. Shop drawings of fences and gates with all dimensions, details, and finishes. Drawings must include post foundations.

C. Product data: Manufacturer's catalog indicating materials and a letter certifying that all conditions of the specifications have been met.

PART 2 PRODUCTS

2.01 MANUFACTURER

A. Products from other qualified manufacturers who have five years or more experience manufacturing galvanized after weaving (GAW) chain link fencing will be considered by the architect as equal if they meet all specifications for design, size, gauge of metal parts and fabrication.

B. Chain link fences and gates must be obtained from a single source.

2.02 CHAIN LINK FENCE FABRIC (See chart for fabric selections.)

A. Wire: ASTM A 392 Standard Specification for Zinc Coated Steel Chain Link Fence Fabric.

Choose one: 1.2 oz/ft² (366 g/m²) Class 1

or 2.0 oz/ft² (610 g/m²) Class 2

B. Chain link fence fabric shall be made of steel wire helically wound and interwoven in such a manner as to provide a continuous mesh without knots or ties except in the form of knuckling or twisting the ends of the wire to form the desired selvage of the fabric. Fabric height of _____ feet (_____ mm), mesh size of _____ inches (_____ mm), and a wire diameter of _____ inches (_____ mm). The wire breakload or strength to be _____ lbf (_____ N).

C. Selvage of fabric (specify knuckled or twisted) _____ top; _____ bottom.

PART 3 EXECUTION

3.01 EXAMINATION

A. Verify areas to receive fencing are completed to final grades and elevations.

B. Property lines and legal boundaries of work to be clearly established by the general contractor or property owner.

3.02 CHAIN LINK FENCE INSTALLATION

A. Install chain link fence in accordance with ASTM F 567.

GAW Chain Link Fence Fabric

Recommended Usage	Mesh Sizes Available	Gauge Coated Wire	Nominal Diameter Coated Wire	Height of Fence Fabric In Inches (mm)	Minimum Breaking Strength lbf (N)*
Industrial / Commercial	2" (50 mm)	6	0.192" (4.88 mm)	36 (910), 42 (1070), 48 (1220), 60 (1520), 72 (1830), 84 (2130), 96 (2440), 108 (2740), 120 (3050), 144 (3660)	2170" (9650)
		9	0.148" (3.76 mm)	36 (910), 42 (1070), 48 (1220), 60 (1520), 72 (1830), 84 (2130), 96 (2440), 108 (2740), 120 (3050), 144 (3660)	1290" (5740)
Industrial / Security	1" (25 mm)	9	0.148" (3.76 mm)	36 (910), 42 (1070), 48 (1220), 60 (1520), 72 (1830), 84 (2130), 96 (2440), 108 (2740), 120 (3050), 144 (3660)	1290" (5740)
Tennis Court	1¾" (44 mm)	9	0.148" (3.76 mm)	36 (910), 42 (1070), 48 (1220), 60 (1520), 72 (1830), 84 (2130), 96 (2440), 108 (2740), 120 (3050), 144 (3660)	1290" (5740)
		11	0.120" (3.05 mm)	36 (910), 42 (1070), 48 (1220), 60 (1520), 72 (1830), 84 (2130), 96 (2440), 108 (2740), 120 (3050), 144 (3660)	850" (3780)
Security	1" (25 mm)	11	0.120" (3.05 mm)	36 (910), 42 (1070), 48 (1220), 60 (1520), 72 (1830), 84 (2130), 96 (2440), 108 (2740), 120 (3050), 144 (3660)	850" (3780)
	¾" (19 mm)			36 (910), 42 (1070), 48 (1220), 60 (1520), 72 (1830), 84 (2130), 96 (2440), 108 (2740), 120 (3050), 144 (3660)	850" (3780)
	⅝" (16 mm)			36 (910), 42 (1070), 48 (1220), 60 (1520), 72 (1830), 84 (2130), 96 (2440), 108 (2740), 120 (3050), 144 (3660)	850" (3780)
	½" (13 mm)			36 (910), 42 (1070), 48 (1220), 60 (1520), 72 (1830), 84 (2130), 96 (2440), 108 (2740), 120 (3050), 144 (3660)	850" (3780)
	⅜" (10 mm)			36 (910), 42 (1070), 48 (1220), 60 (1520), 72 (1830), 84 (2130), 96 (2440), 108 (2740), 120 (3050), 144 (3660)	850" (3780)
	⅜" (10 mm)	14	0.080" (2.03 mm)	36 (910), 42 (1070), 48 (1220), 60 (1520), 72 (1830), 84 (2130), 96 (2440), 108 (2740), 120 (3050), 144 (3660)	n/a

Sizes printed in red meet ASTM A 392

*Meets ASTM A 817

MERCHANTS METALS CORPORATE OFFICE
3838 N. Sam Houston Parkway E. Suite # 600
Houston, TX 77032
281-372-3800 • 866-888-5611 • Fax 281-372-3801

For Complete Specifications and Drawings, Contact: Technical Sales (888) 260-1600 Fax (888) 261-3600

GAW
Manufactured By:

MERCHANTS METALS

The First Name In Fence

FOR A LOCATION NEAR YOU, VISIT OUR WEBSITE:
www.merchantsmetals.com

GAW
Distributed By:

Bottom Lock

The bottom-lock slat provides an economical and attractive way to enhance any chain link fence.

Pexco is the largest manufacturer of Bottom-Locking Slats, which are marketed under the PDS® brand name. With over 30 years of experience extruding this product and an exclusive, patented, locking design, you can be assured of the highest standards in quality—from the raw materials used in manufacturing to the finished product in your fence.

Design
Bottom-lock slats are flat and tubular in shape, with reinforced "legs" inside for extra durability. Our patented, locking channel provides a "snap-in" locking effect for security and to deter vandalism.

Standard Heights
4, 5, 6, 7, 8, 10 and 12 feet. Special heights available upon requests.

Wind Load and Privacy Factor
Approximately 75%.

Slat Length
3½" shorter than overall height of fence.

Colors*

white, green, brown, black, beige, gray, redwood, royal blue, light blue

* Exact representation of slat colors in printing is difficult. Please refer to actual color samples for final matching.

Covered by one or more of the following patents: US Patent 6,068,243 / 5,165,664 / 5,234,199

PDS FENCE PRODUCTS

PDS ® is a registered trademark of Pexco.

Bottom Lock Product Specifications

Slat Type	Slat Width	Mesh Size	Wire Gauge	Slats Per Bag	Approx. Coverage Per Box
Bottom Lock 2"	1 3/32"	2"	8, 9 or 11	82	10 linear feet
Bottom Lock 2¼"	1¼"	2¼ or 2 3/8"	11½" or 12½"	78	10 linear feet
Bottom Lock 1¾"	7/8"	1¾"	8, 9 or 11	97	10 linear feet
	7/8"	2"	6	97	10 linear feet

Materials
The Bottom Lock product is extruded from High Density Polyethylene (HDPE), color pigments and ultra violet (UV) inhibitors, specifically designed to retard the harmful effects of the sun and lengthen the life of the product.

Durability
Pexco PDS® HDPE Fence Products are resistant to: severe weather conditions, salt water, sand, road dirt, most acids, alcohol, alkaline, ammonia, petroleum distillates and common environmental pollutants.

Maintenance
Pressure cleaning of surface contaminants is quickly accomplished with plain water.

Wind load Disclaimer
Pexco will not be responsible for fence damage resulting from wind load conditions due to insufficient structural support.

Limited Warranty
Bottom Lock carries a 25-year, pro-rata warranty against breakage under normal conditions. Write Pexco for full warranty information.

HDPE Technical Properties

Property	Value
Melt Index	(.6) A low melt index indicates improved stress and crack resistance.
Density	(.957) Polyethylene ranges anywhere from .914 to .960 in density. A higher density yields maximum stiffness without becoming overly brittle.
Minimum Temp.	(-76° F) Polyethylene stays flexible even at this temperature extreme.
Maximum Temp.	(250° F) Polyethylene does not distort until reaching this temperature.
Tensile Strength	(3,700 psi) Material will not suffer distortion at lesser loads or impacts.

Installation Instructions

Step 1

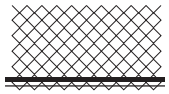

Insert rail horizontally in first full diamond at bottom of fence with open side facing up.

Step 2

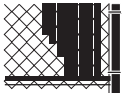

Insert vertical slats with beveled/notched end downward. Slat engages and interlocks with bottom rail.

Step 3

Push the vertical slat into the horizontal channel to lock-in place.

PDS FENCE PRODUCTS

Pexco Tacoma
Tacoma, WA
800.822.7528

Pexco Athol
Athol, MA
800.755.7528

www.pdsfence.com
www.pexco.com

Contact your local fence professional for more information about our complete line of enhancement products.

Exhibit received May 18, 2016

PRAXAIR
PRAXAIR
NITROGEN
REFRIGERATED
LIQUID

REQUEST FOR PLAN COMMISSION ACTION
STAFF PROJECT REVIEW

TO: Chairperson Ruffatto and Members of the Wheeling Plan Commission

FROM: Andrew C. Jennings, Director of Community Development
Brooke A. Jones, Senior Planner

RE: Docket No. 2016-11and PC 16-6
Northgate Crossing
100-600 Burlington Circle, 100-300 Hudson Court, 100 Wabash Way, and 267 Northgate Parkway
(2016-11) Approval of an Amendment to a Planned Unit Development for Multi-Family Residential
(PC 16-6) Approval of a Final Plat of Subdivision

DATE OF REPORT: May 19, 2016

DATE OF MEETING: May 26, 2016

PROJECT OVERVIEW: The petitioner is requesting an amendment to the Northgate Crossing PUD for the purposes of amending the site plan and unit mix among the existing development and to expand the development to include 12 additional townhomes across the street from the new apartment development. Ordinance No. 4876, which approved the Final PUD for Northgate Crossing, was passed on July 21, 2014. The petitioner is also requesting approval of a final plat of subdivision.

LOCATION MAP:

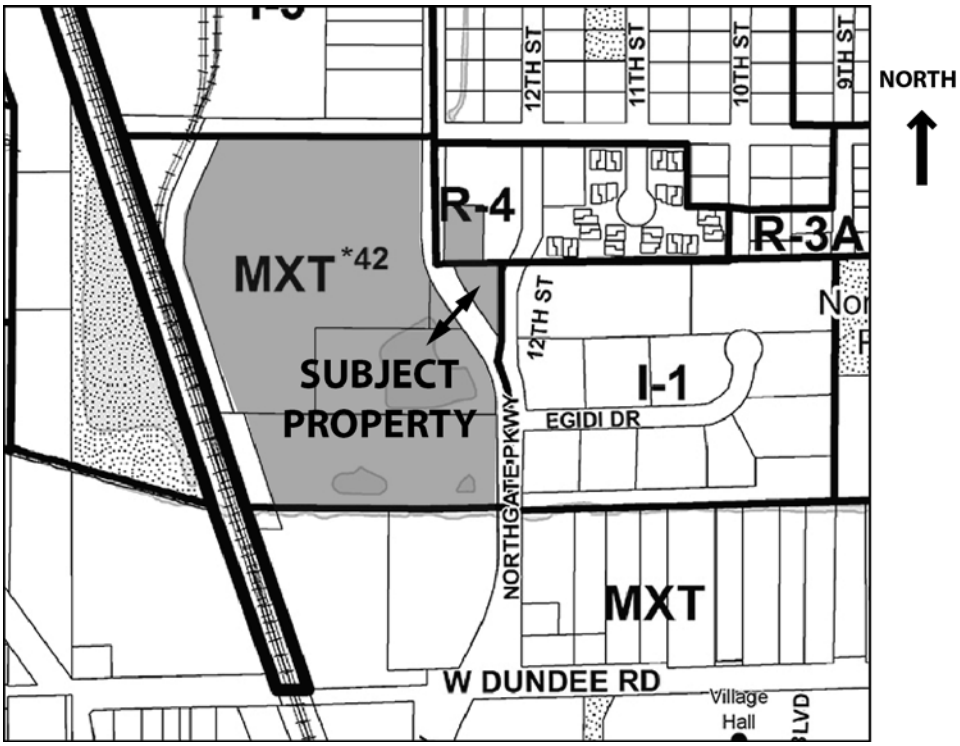

GENERAL PROPERTY INFORMATION

Applicant Name:	Reva Development Partners
Property Owner Name:	Reva Development Partners
Common Property Address:	100-600 Burlington Circle, 100-300 Hudson Court, 100 Wabash Way, and 267 Northgate Parkway
Common Location:	Located on the east and west side of Northgate Parkway between Buffalo Creek and the Diversion Channel.
Neighboring Property Land Use(s):	North: Industrial (Horizon Steel) / single-family residential West: Utility/Transportation South: Creek/vacant land along Dundee Road East: Light industrial / multi-family residential
Comprehensive Plan Designation:	Transit-oriented mixed use / multi-family residential
Property size:	Approximately 22.27 acres
Existing Use of Property:	Multi-family residential on west side / vacant on east side of Northgate Pkwy
Existing Property Zoning:	MXT – Transit-oriented mixed use / R-4 Multiple Family Residential

Previous Zoning Action on Property:

2007-5	Rezoning of 250 Northgate from I-3 General Industrial District to MXT Transit-Oriented Mixed Use District, Approved March 26, 2007 (Ordinance 4188).
2013-12A	Rezoning of 100 Northgate from I-3 General Industrial District to MXT Transit-Oriented Mixed Use District, Approved August 5, 2013 (Ordinance 4783).
2013-12B	Final PUD, Special Use, Site Plan, and Appearance of Northgate Crossings Approved July 21, 2014 (Ordinance 4876).
PC 15-7	Minor Site Plan & Appearance Approval of one building color scheme granted on May 28, 2015.
PC 15-10	Minor Site Plan & Appearance Approval of second building color scheme granted on August 27, 2015.
PC 15-13	Minor Site Plan & Appearance Approval of site modifications granted on September 10, 2015.

UPDATE SINCE MAY 12, 2016 HEARING

At the May 12, 2016 Plan Commission hearing, Docket No. 2016-11 was continued to May 26, 2016 so that the petitioner could address the following suggestions made by the Plan Commission **(staff update provided in bold)**:

1. Provided that the design and plant pallet is maintained in substantial compliance with the landscape plans submitted April 14th, the landscape plan may be adjusted as needed for final storm water system approval which is granted by MWRD. **This condition of approval has been updated to reference the more recent submittal date of May 17, 2016.**
2. Irrigation shall be provided per Code. **Noted on plans.**
3. The A/C condenser on the front of the buildings shall be heavily screened from view with landscaping and shown on the plans. **A/C units shown on engineering plans.**
4. Steps shall be removed from the public right-of-way and the plans shall be revised. **Steps are no longer in the public ROW.**
5. To address the location of the public walk on the private property, either the sidewalk shall be dedicated to the Village for public right of way or an easement for public use shall be placed on the private property. **An easement for public use is proposed (see Plat of Subdivision). However, staff prefers that the property be dedicated to the Village for public right of way, in lieu of the easement. The Plat of Subdivison should be revised to reflect this change.**
6. Allow for the placement of a sidewalk through the green space between the townhome buildings connecting the public walk to the rear of the units. **Sidewalk shown on all plans.**
7. A board on board wood fence shall be installed on the northern and eastern property lines to screen the parking. **Location of fence shown on landscape and engineering plan. Fence detail provided on landscape sheet L2.1.**
8. Address the following:
    a. Parking pavers vs. asphalt; **The parking lot will be paved in asphalt.**
    b. Islands on the lighting plan; **A crushed granite material is proposed. A photo example is provided and the islands are shown on all the plans.**
    c. Mailboxes, **The community mailbox location is shown on the landscape plans, adjacent to the new sidewalk that cuts between the buildings.**
    d. Trash removal; **Each unit will have rolling trash cans which will be stored in garages.**
    e. Snow removal; **Snow will be removed through the entire PUD area snow management plan.**
    f. Railing locations/design/materials, **A detail is provided on landscape sheet L2.1.**
    g. Feasibility of unit configuration (6/6 vs 5/7); **The petitioner's land planner determined that the 7/5 unit configuration is superior due to the dimensions and configuration of the land parcels.**

9. If Staff determines that an additional crosswalk is feasible and safe then it shall be installed. **A crosswalk is proposed across Northgate Parkway, just south of Burlington Circle. However, staff prefers that the crosswalk be located on the north side of Burlington Circle.**

DESCRIPTION OF PROPOSAL

Reva Development Partners is returning to the Plan Commission at this time to amend the Northgate Crossing PUD. Their request is two-fold:

1. Amending the site and unit mix at the apartment development on the west side of Northgate Parkway; and
2. Expanding the development to include 12 additional rental townhomes on the east side of Northgate Parkway.

A minor change is occurring at the southern end of the apartment development. The petitioner is proposing to add a dog park. A partial site plan for this area is provided to illustrate the new configuration.

A more significant change to the existing apartment project on the west side of Northgate Parkway is the proposal to modify the unit mix. The developer proposes to convert some one-bedroom plus a den units to two-bedroom units. There will be no noticeable change to the site. Merely, the dens will be converted to an actual bedroom with a closet. This modification is proposed for only 16 units throughout the site. The impact is on the parking requirement. Since one-bedroom units require less parking per the Zoning Code than two-bedroom units, the proposal requires additional parking. The conversion requires eight additional parking spaces per code. However, the petitioner is requesting a variation so that no additional parking spaces will be constructed.

The most significant aspect of this proposal is the expansion of Northgate Crossing to the east to accommodate 12 additional townhomes. The proposed townhomes will be rental units and will have full access to the amenities at the Northgate Crossing apartments on the west side of the street, including the pool, fitness center, and clubhouse. Each townhome will have three bedrooms, 2.5 baths and attached 2-car garages. The units will be approximately 2,000 sq. ft. in size. A list of the zoning variations required for the proposed townhomes is noted in the section below.

DESCRIPTION OF REQUESTED ZONING VARIATIONS

The petitioner is requesting four zoning variances for the following items within *Section 19.04.060 R-4 Multiple-Family Residential District* **for the proposed 12-unit townhomes**:

Variations	**Required**	**Proposed**
Minimum building setback (interior side)	30'	15'

Minimum building setback (front)	30'	7.76'
Minimum distance between 2-story buildings	30'	24.75'
Maximum number of units per townhome building	6	7

The petitioner is also requesting code relief to alter the bedroom unit mix at the **288-unit apartment project**. The petitioner desires to convert 16 units that have been constructed as one-bedroom plus a den to 2-bedroom units. The proposed conversion from one-bedroom to two-bedroom units requires an additional eight parking spaces. The proposed unit mix of the apartment complex would require a total of 548 parking spaces. The petitioner is proposing not to construct additional parking. Therefore, there would be a parking deficit of 9 parking stalls in the apartment complex. However, the total parking for the PUD includes the new townhomes. The townhome development has a parking surplus of 3 stalls. Therefore, the total parking variation for this amendment is 6 parking stalls. The total parking requirement for the entire PUD is 601 stalls and the total parking provided is 595.

A variation is also required to add two additional principal buildings to the single zoning lot. Currently, there are 10 buildings on the Northgate Crossings PUD. With the addition of the townhomes the total number of principal buildings will be 12.

DESCRIPTION OF REQUESTED ADDITIONAL CODE RELIEF

The petitioner no longer requires code relief related to the use of steps in the right of way (ROW). The Village Engineer has requested that the site be engineered to relocate as many steps as possible out of the Northgate Parkway ROW. The steps have been removed from the Village ROW.

Additionally, the petitioner is requesting code relief from a local amendment to the Building Code, which would require an exit door adjacent to each garage door. Community Development and Fire Department staff are both in agreement with this relief.

SITE PLAN REVIEW FOR MODIFICATIONS TO APARTMENT DEVELOPMENT

Proposed General Site Layout: A partial site plan is provided for the proposed dog park area at the southeast corner of the existing Northgate Crossing apartment complex. The area is located just east of Building 9. Staff has provided the approved site plan for the entire apartment development so that the Plan Commission can see the location of the dog park in context with the overall site.

Total Number of Parking Spaces: The petitioner's request to modify the bedroom mix among the existing apartments requires a parking variation. Reva proposes to convert 16 units that are currently one bedroom plus a den to two bedroom units. Per code, the one bedroom plus a den units are considered one bedroom units. Therefore, the conversion of these units to two bedrooms requires more parking per code. One bedroom units require only 1.7 parking spaces per unit and two bedroom units require 2.2 stalls per unit. The conversion of 16 units from one

bedroom to two bedrooms requires eight additional parking stalls per the Zoning Code. The petitioner does not plan to construct eight additional parking stalls. Instead the petitioner is requesting a parking variation. The total required parking count for the existing apartments is 540. The existing PUD granted a variation of one parking stall to allow only 539 spaces. The petitioner is requesting to expand the parking variation to maintain the 539 spaces, in spite of the total parking requirement of 548 spaces.
No changes are proposed to the actual parking areas.

Dog Park Site Fixtures: A four foot high black metal ornamental fence is proposed to enclose the dog run area, which is covered in turf grass. Benches and trash receptacles (each for dog waste and non-dog waste) are proposed.

SITE PLAN REVIEW FOR TOWNHOMES

Scale of Site Plan: 1" = 20"

Proposed General Site Layout: 12 townhomes are proposed for this new phase of construction. The homes are split into two buildings: Building 1 has seven units and Building 2 has 5 units. The site is accessed via 12th Street.

Total Number of Parking Spaces: The parking requirement for townhome units is 4.0 spaces per unit of which 2.0 must be garaged. Additional unassigned visitor parking must be provided at a ratio of 0.4 per unit. Two garaged spaces are provided per unit plus two spaces in the each unit's driveway. Eight additional visitor spaces are provided. Per code, five visitor spaces shall be provided. Therefore, the parking requirements are met for the townhome development.

Site Lighting: The petitioner has submitted a photometric plan indicating that three different light fixtures will be used for the townhome development. There will be 14 building mounted luminaires, 12 can lights for the porches and two pole-mounted fixtures for the parking areas. It appears that the proposed lighting is appropriate for the new residences.

Ownership: Reva owns half of the townhome property. The other half of the site is under contract and will be owned by the developer pending village approval of the PUD amendment. Reva owns the apartment development to the west.

Sidewalks: The paving plan (Sheet 5 of 13 on the engineering plans) indicates that portions of the public sidewalk along Northgate Parkway will be located on private property. This is generally discouraged. To address this issue, the petitioner is proposing to grant an easement for public use of the sidewalk on the private property. Village staff prefers that this property is dedicated to the Village as public right of way. The Final Plat of Subdivision should be revised to address this change. If the plat is not updated by May 26, 2016, then the Plat (Docket No. PC 16-06) shall be tabled.

At the Village Engineer's request, all steps leading up to the front porches have been removed from the Northgate Parkway ROW. A handrail detail for the steps is provided on the landscape sheet L2.1.

Lastly, since the residents of the townhomes will have access to the amenities on the west side of Northgate Parkway, there should be safe access for pedestrian access across Northgate Parkway. The petitioner is proposing to install a crosswalk just south of Burlington Circle. Staff has determined that the safer location for the crosswalk is on the north side of Burlington Circle. Furthermore, staff recommends that proper advanced warning signage shall be installed. Staff has added a condition of approval to note this crosswalk configuration.

APPEARANCE REVIEW FOR TOWNHOMES

Building/Unit Size: Two buildings are proposed with seven units in Building 1 and five units in Building 2. The Zoning Code states that no more than six units are allowed per town home building. Therefore, the petitioner is seeking a variation for seven units in building 1. The units will each contain 3 bedroom and 2.5 baths. The homes will range in size from 1,971 sq. ft. to 2,029 sq. ft. The buildings are two and a half stories and measure 35'3" in height.

Elevation Plan Review: The building design creates an attached row home appearance. The buildings front onto Northgate Parkway. As such, the attached tuck under garages will not be visible from Northgate Parkway. This traditional design will complement the streetscape and neighboring properties.

The design, materials and color scheme for the townhomes will compliment that of the apartment buildings on the west side of Northgate Parkway. A brick veneer is proposed for the bottom one and a half stories. Above the brick will be a combination of cementitious lab and cementitious shake siding. The petitioner indicated that the color scheme The buildings include attractive features such as porticos on the front elevations, bay windows on the end units, rear balconies, gable brackets, soldier course and cast stone sills on the brick portions of the buildings, and composite trims for the siding portions of the buildings. The buildings contain asphalt roof shingles.

Materials Samples Provided: The brick and siding materials and colors will match those of the approved apartment buildings.

HVAC/Mechanical Components Screened: The air conditioning condensers are now shown on the plans, per the Plan Commission's direction to locate them in the front/side yards.

LANDSCAPING PLAN REVIEW FOR TOWNHOMES

Existing Landscaping to Remain: The sites have been cleared.

Proposed Landscaping: The landscape plan is extremely thorough and is divided into three detailed sheets. The plan indicates that a variety of shade trees, ornamental trees, evergreen trees, deciduous shrubs, evergreen shrubs, perennials, ground covers, and ornamental grasses will be provided. Extensive foundation plantings are proposed for the front and sides of the buildings. The rear of the buildings will be paved with landscape screening at the perimeter of the site. The triangular tip at the southern end of the site will feature a detention area that is heavily landscaped. The exact landscaping plans for this area may change based upon evolving engineering plans.

Landscape Irrigation: The site will be irrigated per code.

STANDARDS FOR SPECIAL USE

Following are standards for a special use with the petitioner's responses in italics. **(Village Planner comments are in bold.)**

1. State why the Special Use is necessary for the public convenience at the proposed location.

   "The 288 unit Northgate Crossing apartment project was approved in 2014 and is under construction. The proposed Phase II townhomes would offer a complementary townhome product for renters and would utilize small parcels of land on Northgate Parkway that would otherwise remain as vacant land."

   The proposed development is consistent with the concepts contemplated in the Comprehensive Plan. There are currently no townhome dwelling units in the town center area. Residential units are an essential element of a successful and active town center.

2. State how the Special Use will not alter the essential character of the area in which it is to be located.

   "The addition of townhomes will fit in with and enhance the character of the apartment community that is currently under construction and the surrounding area."

   The Comprehensive Plan provides for a change to the essential character of the area. It is anticipated that the area will evolve as a mixed use center, and a mix of multi-family residential options is consistent with the expected land use pattern.

3. State how the location and size of the special use, the nature and intensity of the operation involved in or conducted in connection with it, the size of the site in relation to it, and the location of the site with respect to streets giving access to it, will be in harmony with and will not impede the normal, appropriate, and orderly development of the district in which it is to be located and the development of surrounding properties.

   "The properties at 267 Northgate Parkway and 0 12th Street are small parcels of vacant land that most likely are not large enough to support a stand-alone development project. Building the 12 townhomes as part of the Northgate Crossing apartment project would

provide a complementary product type and fits in with the residential product neighboring the site. The use will not cause a conflict with adjacent properties in any way."

The proposed PUD is physically isolated from other developable properties and should not have a negative impact on the development of the town center. The proposed development will likely help to provide a diversity in the town center housing stock because the housing closer to the town center may be denser.

4. State how the location, nature and height of buildings, walls and fences, and the nature and extent of the landscaping on the site shall be such that the use will not hinder or discourage the appropriate development and use of adjacent land and buildings, or will not impair the value thereof.

"The addition of 12 townhomes on this vacant land site will not have a negative impact on the surrounding properties and will enhance the surrounding areas. The product height is consistent with the residential product nearby and at the Northgate Crossing project."

The two and a half story townhomes are complimentary in design and subordinate in size to the neighboring apartments on the west side of Northgate Parkway. The design of the buildings and landscaping will enhance the streetscape.

5. State how the parking areas will be of adequate size for the particular use, properly located, and suitably screened from adjoining residential uses, entrance and exit drives shall be laid out so as to prevent traffic hazards and nuisances, and the development will not cause traffic congestion.

"Parking is more than adequate as each townhome has attached 2-car garage with additional 2 tandem spaces in front of the garage. There will be an additional 8 parking spaces for guests for a total of 56 spaces. Entrance/exit drive is off of 12th Street which has very little traffic."

The parking provided for the townhomes meets the requirements of the Zoning Code. Staff believes that the amount of parking provided is appropriate for the proposed development.

6. State how the special use will conform to all applicable regulations and standards of the zoning district in which it is to be located.

"The properties at 267 Northgate Parkway and 0 12th Street are small parcels of vacant land that most likely are not large enough to support a stand-alone development project. Building the 12 townhomes as part of the Northgate Crossing apartment project would provide a complementary product type and fits in with the residential product neighboring the site."

As is typical with a PUD, the proposal includes code relief in order to produce the development as illustrated on the attached plans. The requested code relief is discussed near the beginning of this report.

STANDARDS FOR VARIATION

Following are standards for variation with petitioner's responses. *The petitioners' response to the following questions has been shown in italics.* **Village Planner comments are in bold.**

1. State how the particular physical surroundings, shape, or topographical condition of the specific property involved would result in a practical difficulty or particular hardship upon or for the owner, lessee or occupant, as distinguished from a mere inconvenience, if the strict letter of the regulations were carried out.

   "The physical shape of the parcels is such that it limits the amount of interior side setback and the distance between the two townhome buildings. To fit within the shape of the parcels, it was necessary to have a 7 and a 5 unit building rather than two 6 unit buildings."

   The subject property is irregularly shaped with triangular corners and a rounded front property line. This limits the buildable area of the site.

2. Indicate how the hardship is due to unique circumstances that do not generally apply to the other properties or uses. (How is the property different from other properties with similar uses that not require a variation?)
   "The combined parcels for this project result in an irregularly shaped piece of property. The townhome buildings were designed to fit within the footprint of the parcel and reflect the overall quality and character of the Northgate Crossing apartment development across from Northgate Parkway."

   The location of the proposed townhomes is specifically chosen to so that the residents can share the amenities of the Northgate Crossing apartments.

3. Describe how the alleged difficulty or hardship has not been created by any person presently having an interest in the property. (Is the problem or hardship a result of actions taken by the applicant?)

   "*The hardship is primarily due to the physical constraints of what can be developed on the site and were not created by any person having an interest in the property."*

   The applicant has not caused any problems. The petitioner is trying to utilize an otherwise difficult site with many site constraints.

4. State how the property in question cannot yield a reasonable return if permitted to be used only under the conditions allowed by the regulations in that zone.

   "*Fitting at least 12 units on the land parcels is the only way to make the project financially feasible. Due to high land development costs on the site, reducing the unit count to satisfy the side setback and distance between unit requirements would significantly erode the value of the property."*

   Without the variations, the petitioner will not build the townhomes because it would not be financially feasible.

5. State how the granting of the variation will not alter the essential character of the locality.

   "Granting the variance will have no negative impact on the appearance or character of the adjacent neighborhood. It will in fact enhance the appearance of the community because it will take otherwise vacant land and put in place attractive residential buildings which would match the character of the Northgate Crossing apartment community."

   The character of the locality will be enhanced by the proposal.

6. Describe how the proposed variation will not impair an adequate supply of light and air to adjacent property, or substantially increase congestion in the public streets, or increase the danger of fire, or endanger the public safety, or substantially diminish or impair property values within the neighborhood.

   "The proposed variance will allow for a pleasing site which promotes green space and architectural scale and details that match the Northgate Crossing apartment project on the west side of Northgate Parkway."

   No negative impact is expected as a result of the granting of the variations.

STAFF REVIEW

Fire Department Review: The Fire Department has submitted comments dated 5.19.2016. These comments may be addressed at final engineering.

Engineering Division Review: The Engineering has received the revised submittal and will have comments prior to the meeting.

Impact on adjacent uses: The impact on existing adjacent land uses would likely be minimal. The proposed townhome development will complement the existing apartment complex to the west.

Staff Recommended Action: Staff recommends the Plan Commission review the following items with the petitioner prior to taking action on Docket No. 2016-11:

1. Determine if the Plat of Subdivision is ready for review and approval. If not, PC 1606 shall be tabled;
2. Discuss staff's suggestion to move the crosswalk to the north side of Burlington Circle;

PROPOSED MOTIONS

If the Plan Commission finds that the petitioner has satisfied the requirements for the granting of special use-site plan-building appearance approval for an amendment to the approved PUD for Northgate Crossing and Final Plat of Subdivision, appropriate motions would be:

Recommend approval of Docket No. 2016-11 to grant an amendment to Planned Unit Development Ordinance No. 4876 in accordance with the following exhibits submitted April 14, 2016 (except as noted) by Reva Development Partners for Northgate Crossing, located at 100-600 Burlington Circle, 100-300 Hudson Court, 100 Wabash Way, and 267 Northgate Parkway, Wheeling, Illinois:

- Cover letter, 4.14.2016
- Cover letter, 5.17.2016
- Unit mix exhibit
- Engineering plans (13 sheets), 5.17.2016
- Townhome elevations (4 sheets)
- Townhome floor plans (5 sheets)
- Townhome landscape plan (7 sheets), 5.17.2016
- Photometric plan
- Lighting cut sheets (10 sheets)
- Dog park partial site plan
- Crushed granite island photograph, 5.17.2016
- Plats of survey (2 sheets)

Including the following relief from the Wheeling Municipal Code:

1. Reduce total parking for the entire development from 601 stalls to 595 stalls (Section 19.11.010 E1C);
2. Allow 12 principal buildings on a single lot while the zoning code states that no more than one principal building may be constructed on a given lot (Section 19.13.070);
3. Reduce the minimum required building setback (interior side) for the townhomes from 30 feet to 15 feet (Section 19.04.060 F);
4. Reduce the minimum required building setback (front) for the townhomes from 30 feet to 7.76 feet (Section 19.04.060 F);
5. Reduce the minimum required distance between two 2-story buildings from 30 feet to 24.75 feet (Section 19.04.060 F);
6. Increase the maximum number of units per townhome building from six to seven (Section 19.04.060 H); and
7. Permit the rear facades of the townhomes to have garage doors without adjacent exit doors.

And with the following conditions:

1. Provided that the design and plant pallet is maintained in substantial compliance with the landscape plans submitted May 17, 2016, the landscape plan may be adjusted as needed for final storm water system approval which is granted by MWRD;
2. That the proposed crosswalk shall be located on the north side of Burlington Circle and shall be installed with proper advance warning signage;

And recommend approval of Docket No. PC 16-6 waiving the preliminary plat requirement and approving the Final Plat Subdivision under Title 17, Planning Subdivisions and Developments as shown on the Final Plat prepared by Manhard Consulting LTD, dated May 17, 2016, prepared by Eric R. Vesley, Illinois Professional Land Surveyor No. 3855, on behalf of Reva Development Partners, for Northgate Crossing Phase 3, located at 267 Northgate Parkway, Wheeling, Illinois,

With the following condition:

1. That the Plan Commission Chair and Secretary sign the document and forward the recommendation to the corporate authorities for review and consideration.

Andrew C. Jennings, AICP
Village Planner

Brooke A. Jones
Senior Planner

Attachments:

Fire Department comments, dated 5.19.2016

Photos of existing conditions (staff)

Cover letter, 4.14.2016

Cover letter, 5.17.2016

Unit mix exhibit

Engineering plans (13 sheets)

Townhome elevations (4 sheets)

Townhome floor plans (5 sheets)

Townhome landscape plan (7 sheets)

Photometric plan

Lighting cut sheets (10 sheets)

Dog park partial site plan

Approved Northgate Crossing Apartment Site Plan (from Ordinance No. 4874)

Plats of survey (2 sheets)

Plat of Subdivision (2 sheets)

MEMO – Fire Prevention Bureau

TO: Brooke Jones, Village Planner

FROM: Ronald S. Antor, Fire Inspector

CC: Andrew Jennings, Director of Community Development

Keith MacIsaac, Fire Chief

FPB File

DATE: May 19, 2016

SUBJECT: Proposed Amendment to PUD For Northgate Crossing – Revisions to Phase I and II, New Phase III (Revised submittals) – Plans received for review by the Fire Department, May 18, 2016.

The Wheeling Fire Department has reviewed the revised submittals received related to the above referenced project. In addition to the May 5, 2016 Fire Department review comments the following comments are provided based on the revised documents:

Site Plan

1. The revised site plans submitted for review include an underground detention system underneath the rear private drive (Fire apparatus access route) servicing the east side of the structures. Documentation shall be provided to demonstrate that this roadway is capable of supporting an 80,000 pound fire apparatus.

At this time there are no other Fire Department comments related to the project as presented in the documents reviewed.

Northgate Crossing – 100-600 Burlington Cir, 100-300 Hudson Ct, 100 Wabash Way, 267 Northgate Pkwy
Docket No. 2016-11 (Amendment to a Planned Unit Development for Multi-Family Residential Development)
Plan Commission Meeting – May 12, 2016 and May 26, 2016

Existing conditions of vacant property on east side of Northgate Parkway

Northgate Crossing – 100-600 Burlington Cir, 100-300 Hudson Ct, 100 Wabash Way, 267 Northgate Pkwy
Docket No. 2016-11 (Amendment to a Planned Unit Development for Multi-Family Residential Development)
Plan Commission Meeting – May 12, 2016 and May 26, 2016

Existing conditions along west side of Northgate Parkway

REVA
DEVELOPMENT
PARTNERS LLC

116 W. Illinois Street, 7th Floor
Chicago, Illinois 60654

April 14, 2016

Mr. Andrew Jennings
Director of Community Development
VILLAGE OF WHEELING
2 Community Boulevard
Wheeling, IL 60090

Re: Northgate Crossings Planned Unit Development
Phase III Townhome Plan for 267 Northgate Parkway

Dear Andrew,

On behalf of Northgate Owner LLC, the owner of Northgate Crossings, Reva Development Partners is pleased to submit our plan for expansion of the Northgate Crossing PUD to allow for an additional 12 townhomes. This request is driven by a growing demand for purpose built rental townhomes in the market. Also, the plan offers a unique and complementary planning solution for two challenging undeveloped parcels in the town center district.

In addition to the previous submitted application materials, the following documents have been updated:

- Photometric Plan (including lighting fixture details and illumination levels)
- Detailed landscape plan with plant schedule
- Colored elevations with materials noted
- Revised Engineering Plans including Plat of Survey
- Proposed Unit Mix for balance of Phase I/II
- Proposed dog park plan

The property includes two undeveloped parcels; a small parcel purchased as part of the original Northgate Crossing development and the adjacent ½ acre parcel located at 267 Northgate Parkway. The plan is to construct twelve luxury rental townhomes. There will be two buildings; one with 7 units and one with 5 units. The units will all be 3 bedroom, 2.5 bath homes. The homes will range from 1,971sf (interior unit) to 2,029sf (end unit). Each home will have an attached private two car garage.

The townhomes will be owned and professionally managed as part of the Northgate Crossing development and will be a complimentary offering to the current 288 unit mix of one and two bedroom apartment flats. The townhome residents will have full access to the pool, fitness center, resident clubhouse and all the Northgate Crossing amenities.

Exhibit received April 14, 2016

REVA
DEVELOPMENT
PARTNERS LLC

116 W. Illinois Street, 7th Floor
Chicago, Illinois 60654

We are currently experiencing very strong demand for rental townhomes at our other rental communities. We have found the rental townhome concept to be an appealing option for a wide range of renters-by-choice including downsizing empty-nesters, relocated families seeking corporate housing and affluent couples not ready to jump into homeownership.

As part of our submittal package, we are requesting minor zoning variances related to side setback, distance between buildings, maximum size of townhome buildings, side yard setback, and rear setback for parking. We feel that site plan and building footprints were carefully though-out and seek to fit in with the character of the overall Northgate Crossing development while also maximizing the use of the physical shape of the currently undeveloped parcels. We will also document a list of requested building code variances which will be submitted at a later date.

If approved, our anticipated schedule would be to begin construction in Spring 2016 and be completed by the beginning of 2017, consistent with the completion of the balance of the Northgate Crossing development.

In addition to our package for Phase III, we are also requesting the following modifications for Phase I/II as part of the PUD amendment:

- Revision to one of our unit floor plans (Unit Type F, "Georgian" floor plan) to convert the den to a full bedroom by adding a door and closet in the last 4 buildings that are currently being constructed. This would result in 16 units being changed from the originally planned 1BR/1BA + Den configuration to a 2BR/1BA configuration (See attached exhibit for a comparison of current vs. proposed unit mix).

- Addition of a fenced-in dog park to the Southeast corner of the project per the attached exhibit.

We look forward to discussing our submittal with to the Plan Commission on May 12th. Until then, please let us know if we can provide any additional information for your consideration.

Regards,
REVA Development Partners, LLC

Matt Nix, Principal
Warren James, Principal

Attachments- Phase III Planning and Zoning submittal applications and exhibits, Proposed unit mix reconfiguration exhibit, Proposed dog park plan exhibit

Exhibit received April 14, 2016

REVA
DEVELOPMENT
PARTNERS LLC

116 W. Illinois Street, 7th Floor
Chicago, Illinois 60654

May 17, 2016

Mr. Andrew Jennings
Director of Community Development
VILLAGE OF WHEELING
2 Community Boulevard
Wheeling, IL 60090

Re: Northgate Crossings Planned Unit Development
Phase III Townhome Plan for 267 Northgate Parkway

Dear Andrew,

On behalf of Northgate Owner LLC, the owner of Northgate Crossings, Reva Development Partners is pleased to submit revised plans for expansion of the Northgate Crossing PUD to allow for an additional 12 townhomes. In addition to the previous submitted application materials, the following changes have been implemented to the attached documents per the plan commission's direction:

- Add sidewalk from parking lot to front between buildings
- Add fence along East and portion of North property line
- Show asphalt in parking lot rather than pavers
- Show detail and materials in between garages
- Show location of mailboxes
- Show changes to front steps moved off of ROW
- Show details for hand railing on steps
- Show A/C locations in front/side of units screened by landscaping
- Call out identifying irrigation to be provided per code
- Show potential cross-walk location pending village review for safety
- Grant easement for the public sidewalk on private property (shown on Plat of Subdivision)

To address snow removal concerns, any snow will be removed and handled throughout the entire PUD per the snow removal plan. To address trash collection, each unit will have rolling trash cans which will be stored in the garage and put outside the garage on trash pickup days. To address the possibility of reconfiguring the buildings to two six-unit buildings, it was determined by our land planner that the one seven-unit building and one five-unit building plan was superior due to the dimensions and configuration of the land parcels.

We look forward to discussing our submittal with to the Plan Commission on May 26th. Until then, please let us know if we can provide any additional information for your consideration.

Exhibit received May 17, 2016

REVA
DEVELOPMENT
PARTNERS LLC

116 W. Illinois Street, 7th Floor
Chicago, Illinois 60654

Regards,

REVA Development Partners, LLC

Matt Nix, Principal
Warren James, Principal

UNIT MIX- CURRENT				
Unit Plan	Type	Area	#Units	Total Area
1BR/1BA	Arlington	695	36	25,020
1BR/1BA	Berkshire	767	108	82,836
1BR/1BA	Crescent	873	18	15,714
2BR/2BA	Dakota	1,189	36	42,804
2BR/2BA	Edison	1,196	54	64,584
1BR/1BA/Den	Georgian	882	36	31,752
Totals / Averages		**912**	**288**	**262,710**

UNIT MIX- PROPOSED				
Unit Plan	Type	Area	#Units	Total Area
1BR/1BA	Arlington	695	36	25,020
1BR/1BA	Berkshire	767	108	82,836
1BR/1BA	Crescent	873	18	15,714
2BR/2BA	Dakota	1,189	36	42,804
2BR/2BA	Edison	1,196	54	64,584
1BR/1BA/Den	Georgian	882	20	17,640
2BR/1BA	Georgian +	882	16	14,112
Totals / Averages		**912**	**288**	**262,710**

Exhibit received April 14, 2016

Proposed Improvements for

NORTHGATE CROSSING - PHASE 3

267 NORTHGATE PARKWAY
WHEELING, ILLINOIS

STANDARD SYMBOLS

06-01-15

EXISTING		PROPOSED
	STORM SEWER	
	SANITARY SEWER	
	COMBINED SANITARY SEWER	
FM	FORCEMAIN	FM
	DRAINTILE	
W	WATER MAIN	W
E	ELECTRIC	E
G	GAS	G
T	TELEPHONE	T
	SANITARY MANHOLE	
	STORM MANHOLE	
	CATCH BASIN	
	STORM INLET	
	CLEANOUT	
	HAY BALES	
	RIP RAP	
	VALVE IN VAULT	
	VALVE IN BOX	
	FIRE HYDRANT	
	BUFFALO BOX	
	FLARED END SECTION	
	STREET LIGHT	
	SUMMIT / LOW POINT	S/L
795.20 / 790.25	RIM ELEVATION / INVERT ELEVATION	795.25 / 790.20
	DITCH OR SWALE	
	DIRECTION OF FLOW	
	OVERFLOW RELIEF SWALE	
764	1 FOOT CONTOURS	764
	CURB AND GUTTER	
	DEPRESSED CURB AND GUTTER	
	REVERSE CURB AND GUTTER	
	SIDEWALK	
	DETECTABLE WARNINGS	
	PROPERTY LINE	
	EASEMENT LINE	
	SETBACK LINE	
	MAIL BOX	
	SIGN	
	TRAFFIC SIGNAL	
	POWER POLE	
	GUY WIRE	
	GAS VALVE	
	HANDHOLE	
E	ELECTRICAL EQUIPMENT	
T	TELEPHONE EQUIPMENT	
	CHAIN-LINK FENCE	
790.00	SPOT ELEVATION	792.8 G
	BRUSH/TREE LINE	
16"	DECIDUOUS TREE WITH TRUNK DIA. IN INCHES (TBR)	16"
25'	CONIFEROUS TREE WITH HEIGHT IN FEET (TBR)	25'
S	SILT FENCE	S
	RETAINING WALL	
	WETLAND	

ABBREVIATIONS

06-01-15

ADJ	ADJUST	F/L	FLOW LINE	P.U.D.E.	PUBLIC UTILITY & DRAINAGE EASEMENT
AGG.	AGGREGATE	FM	FORCE MAIN	R	RADIUS
ARCH	ARCHITECT	G	GROUND	R.O.W.	RIGHT-OF-WAY
B.A.M.	BITUMINOUS AGGREGATE MIXTURE	GAS	GAS	RCP	REINFORCED CONCRETE PIPE
B-B	BACK TO BACK	G/F	GRADE AT FOUNDATION	REM	REMOVAL
B/C	BACK OF CURB	G/WALL	GRADE AT WALL	REV	REVERSE
B/P	BOTTOM OF PIPE	GW	GUY WIRE	RR	RAILROAD
B/W	BACK OF WALK	HDWL	HEADWALL	RT	RIGHT
B-BOX	BUFFALO BOX	HH	HANDHOLE	SAN	SANITARY
BIT.	BITUMINOUS	HWL	HIGH WATER LEVEL	SF	SQUARE FOOT
BM	BENCHMARK	HYD.	HYDRANT	SHLD.	SHOULDER
B.O.	BY OTHERS	INL	INLET	SL	STREET LIGHT
C.E.	COMMERCIAL ENTRANCE	INV.	INVERT	SMH	SANITARY MANHOLE
CB	CATCH BASIN	IP	IRON PIPE	ST	STORM
CL	CENTERLINE	LT	LEFT	STA.	STATION
CMP	CORRUGATED METAL PIPE	MAX.	MAXIMUM	STD	STANDARD
CNTRL	CONTROL	MB	MAILBOX	SW	SIDEWALK
C.O.	CLEANOUT	M/E	MEET EXISTING	SY	SQUARE YARDS
CONC.	CONCRETE	MH	MANHOLE	TBR	TO BE REMOVED
CY	CUBIC YARD	MIN.	MINIMUM	T	TELEPHONE
D	DITCH	NWL	NORMAL WATER LEVEL	T-A	TYPE A
DIA.	DIAMETER	P.E.	PRIVATE ENTRANCE	T/C	TOP OF CURB
DIP	DUCTILE IRON PIPE	PC	POINT OF CURVATURE	T/F	TOP OF FOUNDATION
DIWM	DUCTILE IRON WATER MAIN	PCC	POINT OF COMPOUND CURVE	T/P	TOP OF PIPE
DS	DOWNSPOUT	PGL	PROFILE GRADE LINE	T/W	TOP OF WALK
DT	DRAIN TILE	PI	POINT OF INTERSECTION	T/WALL	TOP OF WALL
E	ELECTRIC	PL	PROPERTY LINE	TEMP	TEMPORARY
E-E	EDGE TO EDGE	PP	POWER POLE	TRANS	TRANSFORMER
ELEV.	ELEVATION	PROP.	PROPOSED	V.B.	VALVE BOX
E/P	EDGE OF PAVEMENT	PT	POINT OF TANGENCY	VCP	VITRIFIED CLAY PIPE
EX.	EXISTING	PVC	POLYVINYL CHLORIDE PIPE	V.V.	VALVE VAULT
F.E.	FIELD ENTRANCE	PVC	POINT OF VERTICAL CURVATURE	WL	WATER LEVEL
F-F	FACE TO FACE	PVI	POINT OF VERTICAL INTERSECTION	WM	WATER MAIN
F.F.	FINISHED FLOOR	PVT	POINT OF VERTICAL TANGENCY		
FES	FLARED END SECTION	P	PAVEMENT		

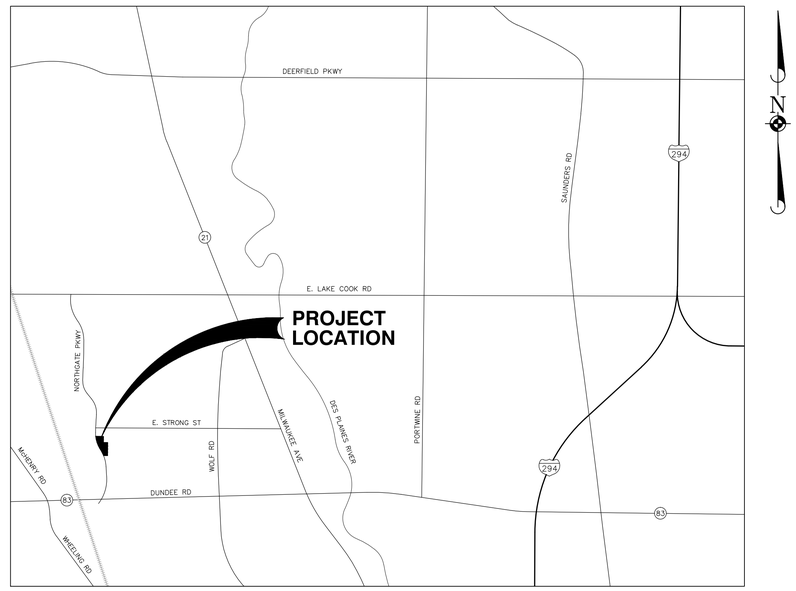

LOCATION MAP

N.T.S.

DEVELOPER:
REVA DEVELOPMENT PARTNERS
116 W. ILLINOIS STREET, 7th FLR
CHICAGO, IL. 60654

BENCHMARKS:

VILLAGE OF WHEELING BENCHMARKS:

BM-9 (NAVD 88 DATUM) :2.5" ALLUMINUM DISK STAMPED: VILLAGE OF SHEELING - SURVEY MARKER
ELEVATION: 647.52

BM-8 (NAVD 88 DATUM) : BRASS DISK, STAMPED: WHEELING NATIONAL GEODATIC SURVEY, 1956 1973
ELEVATION: 652.12

SITE BENCHMARK:

SBM #1 CUT SQUARE IN CURB. WEST OF SITE (NAVD 88 DATUM)
ELEVATION: 648.25

NOTES:

1. THE BOUNDARY LINES FOR THIS PROJECT IS BASED ON A FIELD SURVEY COMPLETED BY MANHARD CONSULTING, LTD ON MARCH 11TH, 2013. THE CONTRACTOR SHALL VERIFY THE EXISTING CONDITIONS PRIOR TO CONSTRUCTION AND SHALL IMMEDIATELY NOTIFY MANHARD CONSULTING AND THE CLIENT IN WRITING OF ANY DIFFERING CONDITIONS.
2. THE TOPOGRAPHY FOR THIS PROJECT IS BASED ON A SURVEY PREPARED BY COMPASS SURVEY LTD DATED 10-08-15. THE CONTRACTOR SHALL VERIFY THE EXISTING CONDITIONS PRIOR TO CONSTRUCTION AND SHALL IMMEDIATELY NOTIFY MANHARD CONSULTING AND THE CLIENT IN WRITING OF ANY DIFFERING CONDITIONS. MANHARD CONSULTING HAS NOT VERIFIED THIS SURVEY AND IS NOT RESPONSIBLE FOR THE ACCURACY OF THE SURVEY TOPOGRAPHY.

INDEX OF SHEETS

SHEET NO.	DESCRIPTION
01	TITLESHEET
02	EXISTING CONDITIONS & DEMOLITION PLAN
03	SOIL EROSION & SEDIMENT CONTROL PLAN
04	SOIL EROSION & SEDIMENT CONTROL PLAN DETAILS
05	SITE DIMENSIONAL & PAVING PLAN
06	GRADING PLAN
07	UTILITY PLAN
08	SANITARY SEWER PROFILE
09	CONSTRUCTION DETAILS
10	CONSTRUCTION DETAILS
11	CONSTRUCTION DETAILS
12	CONSTRUCTION SPECIFICATIONS
13	ADS DETAILS

Manhard CONSULTING LTD™
900 Woodlands Parkway, Vernon Hills, IL 60061 ph:847.634.5550 fx:847.634.0095 manhard.com
Civil Engineers • Surveyors • Water Resource Engineers • Water & Wastewater Engineers
Construction Managers • Environmental Scientists • Landscape Architects • Planners

JULIE ILLINOIS ONE-CALL SYSTEM
Simply Call 811

UTILITY CONTACTS

ELECTRIC COMMONWEALTH EDISON 3500 NORTH CALIFORNIA AVE. CHICAGO, IL 60618 (800) 334-7661	WATER VILLAGE OF WHEELING 77 WEST HINTZ RD. WHEELING, IL 60187 (847) 279-6900 CONTACT: ANTHONY STAVROS
GAS NICOR GAS 90 NORTH FINLEY RD. GLEN ELLYN, IL 6013 (630) 629-2500	TELEPHONE AT&T TELEPHONE 1101 EAST ROOSEVELT RD. WHEATON, IL 60187 (630) 260-8808
SANITARY SEWER METROPOLITAN WATER RECLAMATION DISTRICT 100 EAST ERIE ST. CHICAGO, IL 60611 (312) 751-5600	STORM SEWER VILLAGE OF WHEELING 77 WEST HINTZ RD. WHEELING, IL 60090 (847) 279-6900 CONTACT: ANTHONY STAVROS

JEREMY D. FOSS 062-058310 LICENSED PROFESSIONAL ENGINEER OF ILLINOIS
SEAL

MANHARD CONSULTING, LTD. IS NOT RESPONSIBLE FOR THE SAFETY OF ANY PARTY AT OR ON THE CONSTRUCTION SITE. SAFETY IS THE SOLE RESPONSIBILITY OF THE CONTRACTOR AND ANY OTHER PERSON OR ENTITY PERFORMING WORK OR SERVICES. NEITHER THE OWNER NOR ENGINEER ASSUMES ANY RESPONSIBILITY FOR THE JOB SITE SAFETY OF PERSONS ENGAGED IN THE WORK OR THE MEANS OR METHODS OF CONSTRUCTION.

DATE	REVISIONS	DRAWN BY

Manhard CONSULTING LTD™
900 Woodlands Parkway, Vernon Hills, IL 60061 ph:847.634.5550 fx:847.634.0095 manhard.com
Civil Engineers • Surveyors • Water Resource Engineers • Water & Wastewater Engineers
Construction Managers • Environmental Scientists • Landscape Architects • Planners

Exhibit received May 17, 2016

NORTHGATE CROSSING - PHASE 3
WHEELING, COOK COUNTY, ILLINOIS
TITLESHEET

PROJ. MGR.: JDF
PROJ. ASSOC.: DAM
DRAWN BY: DAM
DATE: 05-17-16
SCALE: N.T.S.

SHEET 01 OF 13
KNZWH

© 2015 MANHARD CONSULTING, LTD. ALL RIGHTS RESERVED

PENDING APPROVAL - NOT FOR CONSTRUCTION

May 17, 2016 - 16:07 Dwg Name: P:\Kovach\dwg\Eng\Final Drawings\Plan Set\01-TITLE SHEET.dwg Updated By: dkolev

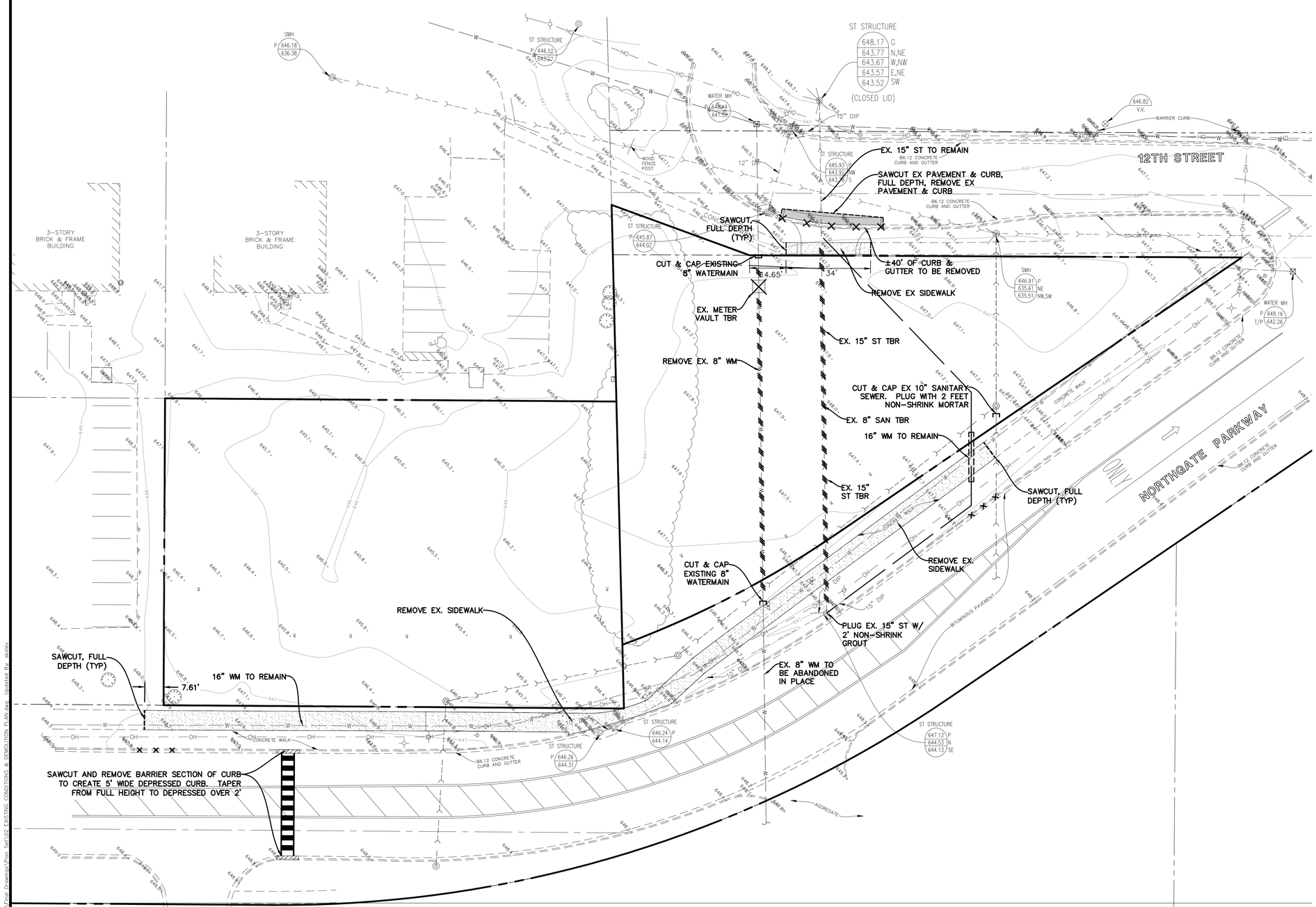

GRAPHIC SCALE

20 0 10 40 80

SCALE: 1"=20'

EXISTING CONDITIONS NOTES:

1. THE BOUNDARY LINES FOR THIS PROJECT IS BASED ON A FIELD SURVEY COMPLETED BY MANHARD CONSULTING, LTD ON MARCH 11TH, 2013. THE CONTRACTOR SHALL VERIFY THE EXISTING CONDITIONS PRIOR TO CONSTRUCTION AND SHALL IMMEDIATELY NOTIFY MANHARD CONSULTING AND THE CLIENT IN WRITING OF ANY DIFFERING CONDITIONS.
2. THE TOPOGRAPHY FOR THIS PROJECT IS BASED ON A SURVEY PREPARED BY LANDMARK ENGINEERING LLC DATED APRIL 19TH, 2013. THE CONTRACTOR SHALL VERIFY THE EXISTING CONDITIONS PRIOR TO CONSTRUCTION AND SHALL IMMEDIATELY NOTIFY MANHARD CONSULTING AND THE CLIENT IN WRITING OF ANY DIFFERING CONDITIONS. MANHARD CONSULTING HAS NOT VERIFIED THIS SURVEY AND IS NOT RESPONSIBLE FOR THE ACCURACY OF THE SURVEY TOPOGRAPHY.
3. THE UNDERGROUND UTILITY INFORMATION AS SHOWN HEREON IS BASED, IN PART, UPON INFORMATION FURNISHED BY UTILITY COMPANIES AND THE LOCAL MUNICIPALITY. WHILE THIS INFORMATION IS BELIEVED TO BE RELIABLE, ITS ACCURACY AND COMPLETENESS CANNOT BE GUARANTEED NOR CERTIFIED TO.

DEMOLITION NOTES:

1. THE CONTRACTOR SHALL COORDINATE WITH RESPECTIVE UTILITY COMPANIES PRIOR TO THE REMOVAL AND/OR RELOCATION OF UTILITIES. THE CONTRACTOR SHALL COORDINATE WITH THE UTILITY COMPANY CONCERNING PORTIONS OF WORK WHICH MAY BE PERFORMED BY THE UTILITY COMPANY'S FORCES AND ANY FEES WHICH ARE TO BE PAID TO THE UTILITY COMPANY FOR THEIR SERVICES. THE CONTRACTOR IS RESPONSIBLE FOR PAYING FOR ALL FEES AND CHARGES.
2. SHOULD REMOVAL AND/OR RELOCATION ACTIVITIES DAMAGE FEATURES INDICATED TO REMAIN, THE CONTRACTOR SHALL PROVIDE NEW MATERIALS/STRUCTURES IN ACCORDANCE WITH THE CONTRACT DOCUMENTS. EXCEPT FOR MATERIALS DESIGNED TO BE RELOCATED ON THIS PLAN, ALL OTHER CONSTRUCTION MATERIALS SHALL BE NEW.
3. PRIOR TO DEMOLITION OCCURRING, ALL EROSION CONTROL DEVICES ARE TO BE INSTALLED.
4. ALL EXISTING UTILITY LINES AND CONDUITS LOCATED UNDER PROPOSED BUILDINGS SHALL BE REMOVED AND PROPERLY BACKFILLED. ALL UTILITY LINES AND CONDUITS LOCATED UNDER DRIVES, ON-SITE ROADS, PARKING LOTS OR SIDEWALKS SHALL BE FILLED WITH A FLOWABLE BACKFILL AND END PLUGGED. ALL EXISTING STRUCTURES SHALL BE REMOVED. ALL EXISTING UTILITY LINES LOCATED UNDER LANDSCAPE AREAS SHALL BE LEFT IN PLACE AND PLUGGED AT ALL STRUCTURES.
5. THE CONTRACTOR IS RESPONSIBLE FOR DEMOLITION, REMOVAL AND LAWFUL DISPOSAL (IN A LOCATION APPROVED BY ALL GOVERNING AUTHORITIES) OF ALL STRUCTURES, PADS, WALLS, FLUMES, FOUNDATIONS, PARKING, DRIVES, DRAINAGE STRUCTURES, UTILITIES, ETC., SUCH THAT THE IMPROVEMENTS SHOWN ON THESE PLANS CAN BE CONSTRUCTED. ALL DEMOLITION WORK SHALL BE IN ACCORDANCE WITH ALL APPLICABLE FEDERAL, STATE AND LOCAL REQUIREMENTS. ALL FACILITIES TO BE REMOVED SHALL BE UNDERCUT TO SUITABLE MATERIAL AND BROUGHT TO GRADE WITH SUITABLE COMPACTED FILL MATERIAL PER THE SPECIFICATIONS.
6. THE CONTRACTOR IS RESPONSIBLE FOR OBTAINING ALL PERMITS REQUIRED FOR DEMOLITION AND DISPOSAL.
7. ELECTRICAL, TELEPHONE, CABLE, WATER, FIBER OPTIC CABLE AND/OR GAS LINES NEEDING TO BE REMOVED SHALL BE COORDINATED BY THE CONTRACTOR WITH THE AFFECTED UTILITY COMPANY.
8. CONTRACTOR MUST PROTECT THE PUBLIC AT ALL TIMES WITH FENCING, BARRICADES, ENCLOSURES, AND OTHER APPROPRIATE BEST MANAGEMENT PRACTICES.
9. CONTINUOUS ACCESS SHALL BE MAINTAINED FOR SURROUNDING PROPERTIES AT ALL TIMES DURING DEMOLITION.

DEMOLITION LEGEND

	PAVEMENT AND BASE TO BE REMOVED
× × × ×	FENCE, RETAINING WALL, RAILROAD TIES, POLES, CURB AND GUTTER, ETC. TO BE REMOVED
	UTILITY STRUCTURE TO BE REMOVED
	UTILITY LINE REMOVAL, FILL OR ABANDONMENT (REFER TO SPECIFICATIONS)
	TREE TO BE REMOVED
TBR	TO BE REMOVED

DATE	REVISIONS	DRAWN BY

Manhard CONSULTING LTD
800 Woodlands Parkway, Vernon Hills, IL 60061 ph:847.634.5500 fx:847.634.0095 manhard.com
Civil Engineers • Water Resource Engineers • Structural Engineers • Surveyors
Construction Managers • Environmental Scientists • Landscape Architects • Planners

NORTHGATE CROSSING - PHASE 3

WHEELING, COOK COUNTY, ILLINOIS

EXISTING CONDITIONS & DEMOLITION PLAN

Exhibit received May 17, 2016

PROJ. MGR.: JDF
PROJ. ASSOC.: DAM
DRAWN BY: ----
DATE: 05-17-16
SCALE: 1"=20'

SHEET 02 OF 13

KNZWH

© 2016 MANHARD CONSULTING, LTD. ALL RIGHTS RESERVED

PENDING APPROVAL - NOT FOR CONSTRUCTION

May 17, 2016 - 16:26 Dwg Name: P:\Kinzwh\Dwg\Eng\Proj Drawings\Phase 3\02 EXISTING CONDITIONS & DEMOLITION PLAN.dwg Updated By: skotov

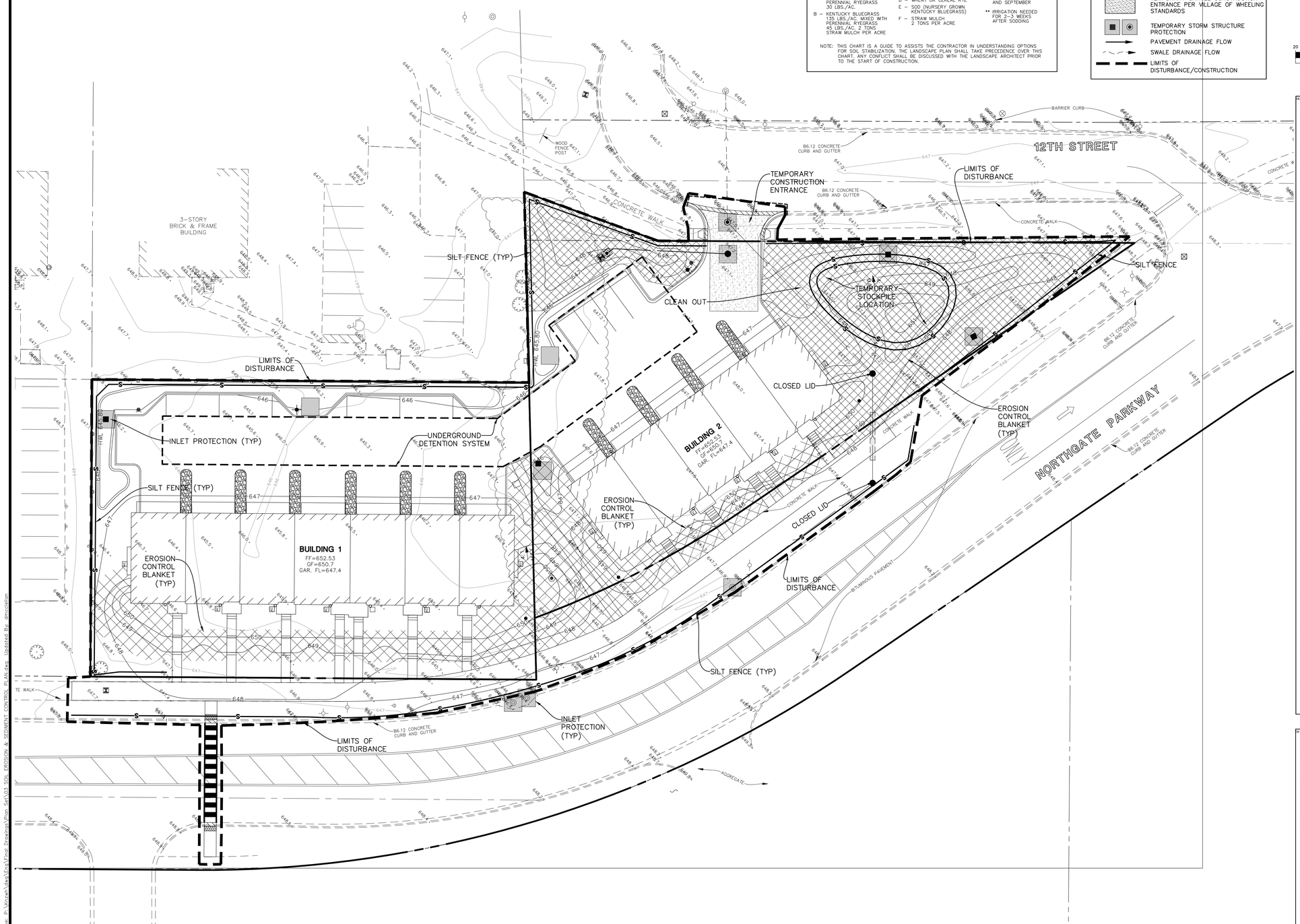

SOIL PROTECTION CHART

STABILIZATION CHART	JAN	FEB	MAR	APR	MAY	JUN	JUL	AUG	SEP	OCT	NOV	DEC
PERMANENT SEEDINGS			A			*	*		*			
DORMANT SEEDINGS	B									B		
TEMPORARY SEEDINGS			C			D						
SODDING			E**									
MULCHING	F											

A – KENTUCKY BLUEGRASS 90 LBS./AC. MIXED WITH PERENNIAL RYEGRASS 30 LBS./AC.

B – KENTUCKY BLUEGRASS 1.35 LBS./AC. MIXED WITH PERENNIAL RYEGRASS 45 LBS./AC. 2 TONS STRAW MULCH PER ACRE

C – SPRING OATS 100 LBS./AC.

D – WHEAT OR CEREAL RYE

E – SOD (NURSERY GROWN KENTUCKY BLUEGRASS)

F – STRAW MULCH 2 TONS PER ACRE

* IRRIGATION NEEDED DURING JUNE, JULY AND SEPTEMBER

** IRRIGATION NEEDED FOR 2–3 WEEKS AFTER SODDING

NOTE: THIS CHART IS A GUIDE TO ASSISTS THE CONTRACTOR IN UNDERSTANDING OPTIONS FOR SOIL STABILIZATION. THE LANDSCAPE PLAN SHALL TAKE PRECEDENCE OVER THIS CHART. ANY CONFLICT SHALL BE DISCUSSED WITH THE LANDSCAPE ARCHITECT PRIOR TO THE START OF CONSTRUCTION.

LEGEND

- —S——S— TEMPORARY SILT FENCE (PERIMETER EROSION BARRIER)
- EROSION CONTROL BLANKET (NORTH AMERICAN GREEN DS 75) (SEEDING PER LANDSCAPE PLAN)
- TEMPORARY GRAVEL CONSTRUCTION ENTRANCE PER VILLAGE OF WHEELING STANDARDS
- TEMPORARY STORM STRUCTURE PROTECTION
- PAVEMENT DRAINAGE FLOW
- SWALE DRAINAGE FLOW
- LIMITS OF DISTURBANCE/CONSTRUCTION

GRAPHIC SCALE

20 0 10 40 80

SCALE: 1"=20'

SOIL EROSION AND SEDIMENTATION CONTROL GENERAL NOTES:

1. ALL VEGETATIVE AND STRUCTURAL EROSION CONTROL PRACTICES SHALL BE CONSTRUCTED AND MAINTAINED IN ACCORDANCE WITH THE MINIMUM STANDARDS AND SPECIFICATIONS OF THE "ILLINOIS URBAN MANUAL".
2. MAINTENANCE AND REPLACEMENT OF EROSION CONTROL ITEMS, WHEN DIRECTED BY THE OWNER, SHALL BE CONSIDERED AS INCIDENTAL TO THE CONTRACT.
3. THE CONTRACTOR SHALL INSPECT ALL EROSION CONTROL MEASURES AT LEAST ONCE EVERY SEVEN (7) CALENDAR DAYS AND WITHIN 24 HOURS OF THE END OF A STORM THAT IS 0.5 INCHES OR GREATER OR EQUIVALENT SNOWFALL. ANY NECESSARY REPAIRS OR CLEANUP TO MAINTAIN THE EFFECTIVENESS OF SAID MEASURES SHALL BE MADE IMMEDIATELY.
4. INSTALL ALL PERIMETER SILT FENCING PRIOR TO ANY CLEARING OR GRADING. ONSITE SEDIMENT CONTROL MEASURES AS SHOWN AND SPECIFIED BY THIS EROSION AND SEDIMENTATION CONTROL PLAN SHALL BE CONSTRUCTED AND FUNCTIONAL PRIOR TO INITIATING CLEARING, GRADING, STRIPPING, EXCAVATION OR FILLING ACTIVITIES ON THE SITE.
5. STORM WATERS FALLING ON THE ENTIRE SITE SHALL BE DIVERTED INTO THE DETENTION BASIN, PRIOR TO BEGINNING MASS EXCAVATION, THE CONTRACTOR SHALL CONSTRUCT DITCHES, SWALES, SEDIMENTATION TRAPS AND SILTATION CONTROL MEASURES AS REQUIRED TO INTERCEPT SURFACE WATERS BEFORE THEY FLOW ONTO ADJACENT PROPERTY AND CONVEY THEM TO THE DETENTION BASIN.
6. DISTURBED AREA SHALL BE STABILIZED BY SEEDING AT A MINIMUM, WITHIN SEVEN (7) DAYS OF COMPLETION OF DISTURBANCE UNLESS THE AREA WILL BE DISTURBED WITHIN FOURTEEN (14) DAYS AND GRASS SOWN AS NECESSARY TO RE– ESTABLISH VEGETATION FOR CONTROL OF SILTATION AND SOIL EROSION.
7. TEMPORARY SEED MIXTURE SHALL BE APPLIED AT 64 LBS/ACRE.
8. INLET PROTECTION SHALL BE INSTALLED UNDER THE GRATING OF EACH DRAINAGE STRUCTURE.
9. TOPSOIL STOCKPILES SHALL BE SEEDED WITHIN SEVEN (7) CALENDAR DAYS OF COMPLETION FOR EROSION CONTROL UNLESS THEY WILL BE DISTURBED WITHIN FOURTEEN (14) CALENDAR DAYS. ALL SOIL STORAGE PILES SHALL BE PROTECTED FROM EROSION WITH SILT FENCE ON THE DOWN SLOPE SIDE OF THE PILES.
10. DURING DEWATERING OPERATIONS, WATER WILL BE PUMPED INTO SEDIMENT BASINS OR SILT TRAPS. DEWATERING DIRECTLY INTO FIELD TILES OR STORMWATER STRUCTURES IS PROHIBITED.
11. WATER PUMPED DURING CONSTRUCTION OPERATION SHALL BE FILTERED.
12. DUST CONTROL SHALL BE PERFORMED ON A DAILY BASIS USING WATER DISPERSED FROM A TRUCK MOUNTED TANK WITH STANDARD DISCHARGE HEADER TO PROVIDE A UNIFORM RATE OF APPLICATION.
13. TEMPORARY GRAVEL CONSTRUCTION ENTRANCES SHALL BE MAINTAINED, ADJUSTED OR RELOCATED AS NECESSARY TO PREVENT SEDIMENT FROM BEING TRACKED ONTO PUBLIC ROADWAYS. ANY SEDIMENT REACHING A PUBLIC ROAD SHALL BE REMOVED BY SHOVELING OR STREET CLEANING BEFORE THE END OF EACH WORKING DAY.
14. ANY LOOSE MATERIAL THAT IS DEPOSITED IN THE FLOW LINE OF ANY GUTTER OR DRAINAGE STRUCTURE DURING CONSTRUCTION OPERATIONS SHALL BE REMOVED AT THE CLOSE OF EACH WORKING DAY.
15. OVERLAND FLOW SHALL BE DIRECTED TO THE DETENTION BASIN PRIOR TO LEAVING THE SITE.
16. THE EROSION CONTROL MEASURES INDICATED ON THE PLANS ARE THE MINIMUM REQUIREMENTS. ADDITIONAL MEASURES MAY BE REQUIRED, AS DIRECTED BY THE CLIENT OR OTHER JURISDICTIONAL GOVERNMENTAL ENTITIES.
17. ALL EROSION AND SEDIMENTATION CONTROL MEASURES SHALL BE REMOVED AND DISPOSED OF IN ACCORDANCE WITH ALL JURISDICTIONAL GOVERNMENTAL AGENCY REQUIREMENTS WITHIN 30 DAYS OF FINAL STABILIZATION.

CONSTRUCTION SEQUENCE:

1. INSTALL SILT FENCE AT LOCATIONS AS INDICATED ON THE PLANS.
2. PROVIDE STABILIZED CONSTRUCTION ENTRANCE.
3. CONSTRUCT TEMPORARY SEDIMENT TRAPS AND/OR BASINS.
4. STRIP EXISTING TOPSOIL FROM PROPOSED STORMWATER MANAGEMENT AREAS AND STOCKPILE WHERE SHOWN ON PLANS.
5. PROVIDE SILT FENCE AROUND THE BASE OF THE STOCKPILES.
6. CONSTRUCT STORMWATER MANAGEMENT (DETENTION) FACILITIES TO SUB–GRADE AND INSTALL OUTLET PIPES.
7. COMPLETE TOPSOIL PLACEMENT AND PERMANENT SEEDING AND SODDING OF STORMWATER MANAGEMENT FACILITIES.
8. CUT AND FILL SITE TO PLAN SUB–GRADE.
9. CONSTRUCT UNDERGROUND IMPROVEMENTS, i.e. SANITARY SEWER WATERMAIN AND STORM SEWER**, ETC.
10. CONSTRUCT PAVEMENT IMPROVEMENTS PER PLAN.
11. COMPLETE CONSTRUCTION OF SITE WITH PERMANENT STABILIZATION.
12. REMOVE TEMPORARY EROSION AND SEDIMENT CONTROL MEASURES.

    ** INSTALL INLET PROTECTION AROUND DRAINAGE STRUCTURES AS CONSTRUCTED.

"THESE EROSION CONTROL PLANS ARE A PORTION OF THE ILLINOIS ENVIRONMENTAL PROTECTION AGENCY (IEPA) TOTAL REQUIREMENTS FOR A COMPLETE STORMWATER POLLUTION PREVENTION PLAN (SWPPP) AS REQUIRED BY THE GENERAL NPDES PERMIT NO. ILR10. CLIENT AND/OR CONTRACTOR WILL BE RESPONSIBLE FOR COMPLIANCE WITH ALL REQUIREMENTS OF THE GENERAL NPDES PERMIT AND COMPILATION OF THE COMPLETE SWPPP."

DATE	REVISIONS	DRAWN BY
-	-	-
-	-	-
-	-	-
-	-	-
-	-	-
-	-	-
-	-	-
-	-	-

Manhard CONSULTING LTD
800 Woodlands Parkway, Vernon Hills, IL 60061 ph:847.634.0050 fx:847.634.0089 manhard.com
Civil Engineers • Water Resource Engineers • Surveyors • Water & Wastewater Engineers
Construction Managers • Environmental Scientists • Landscape Architects • Planners

NORTHGATE CROSSING - PHASE 3

WHEELING, COOK COUNTY, ILLINOIS

SOIL EROSION & SEDIMENT CONTROL PLAN

Exhibit received May 17, 2016

PENDING APPROVAL - NOT FOR CONSTRUCTION

PROJ. MGR.:	JDF
PROJ. ASSOC.:	DAM
DRAWN BY:	----
DATE:	05-17-16
SCALE:	1"=20'

SHEET 03 OF 13

KNZWH

© 2016 MANHARD CONSULTING, LTD. ALL RIGHTS RESERVED

May 17, 2016 – 10:17 Dwg Name: P:\Vorwerk\Dwg\Eng\Final Drawings\Phase 3\04\03 SOIL EROSION & SEDIMENT CONTROL PLAN.dwg Updated By: dmccollom

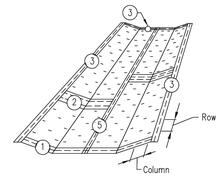

NOTES:

1. On erosion control paper, check slots, in ditch channel shall be spaced so that one occurs within each 50' on slopes of more than 4% and less than 6%. On slopes of 6% or more, they shall be spaced so that one occurs within each 25'.
2. Staples are to be placed alternately, in columns approximately 2' apart and in rows approximately 3' apart. Approximately 175 staples are required per 4'x 225' roll of material and 125 staples are required per 4'x 150' roll of material.
3. Erosion control material shall be placed loosely over ground surface. Do not stretch.
4. All terminal ends and transverse laps shall be stapled at approximately 12" intervals.

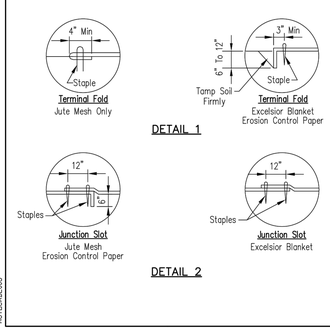

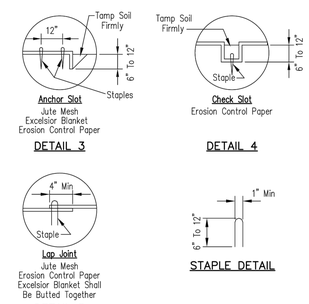

Date	
Designed	
Drawn	N. SHAWKI 2/1/99
Checked	
Approved	

EROSION BLANKET INSTALLATION DETAILS

NRCS
Natural Resources Conservation Service
United States Department of Agriculture

File No. IL-ENG-61
Drawing No.
Sheet 1 of 1

AUTOCAD2006

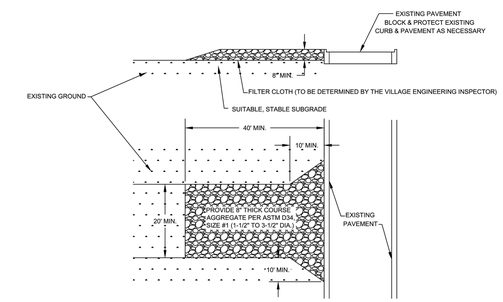

VILLAGE OF WHEELING ILLINOIS

VILLAGE OF WHEELING
ENGINEERING DIVISION
2 COMMUNITY BOULEVARD
WHEELING, IL 60090
WWW.WHEELINGIL.GOV

TEMPORARY CONSTRUCTION ENTRANCE STANDARD

VILLAGE OF WHEELING
SPECIFICATIONS AND DETAILS
FILE LOCATION
N:\ENGINEERING\STANDARDS\EROSION CONTROL

REVISIONS	
P.F.	08-16-99
C.J.C.	10-01-08 AUTOCAD FILE

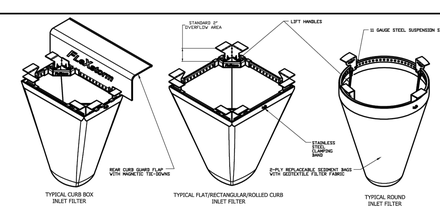

IPP FlexStorm Inlet Filter Specifications			
Material Property	Test Method	Value (minimum)	
		Non-Woven	Woven Mesh
▸ Inner Filter Bag Specs (7.5" min. sill)			
Grab Tensile	ASTM D 4632	120 lbs	250 lbs
Puncture Strength	ASTM D 4833	65 lbs	90 lbs
Mullen Burst Strength	ASTM D 3786	415 lbs	750 lbs
UV Resistance	ASTM D 4355	70% of strength	90%
Sag Open Size (AOS)	ASTM D 4751	20 US sieve (.850 mm)	40 US sieve (.425 mm)
Permeability	ASTM D 4491	2.0 cm/s	0.5 cm/s
Water Flow Rate	ASTM D 4491	140 gpm/ft²/ft	120 gpm/ft²/ft
▸ Polyester Outer Reinforcement Bag Specifications:			
Strength	ASTM D 5034	450 lbs (grab) x 1.5 = 1350	
Mullen Burst	ASTM D 3786	2040 x 1.5 = 3060	
▸ Frame Construction			
Fill Structural Steel (11 Gauge) Zinc Plated	ASTM A 123	Tensile Strength = 58,000 psi; Yield Strength = 36,000 psi	

OR VILLAGE OF WHEELING APPROVED EQUAL

PROJ. MANAGER	
DESIGNED	
DR.	
CK.	
DRAWING	
	ALL PRODUCTS MANUFACTURED BY INLET & PIPE PROTECTION, INC 16205 TONNE #3 ELK GROVE, IL WWW.INLETFILTERS.COM (847) 722-0690 PH (847) 722-0691 FAX SALES@INLETFILTERS.COM
	C / 09 / IPP FLEXSTORM_SPECS
	SCALE / SHEET 1 OF 1

VILLAGE OF WHEELING ILLINOIS

VILLAGE OF WHEELING
ENGINEERING DIVISION
2 COMMUNITY BOULEVARD
WHEELING, IL 60090
WWW.WHEELINGIL.GOV

INLET AND FILTER PROTECTION STANDARD

VILLAGE OF WHEELING
SPECIFICATIONS AND DETAILS
FILE LOCATION
N:\ENGINEERING\STANDARDS\EROSION CONTROL

REVISIONS	
C.J.C.	03-05 NEW FILE

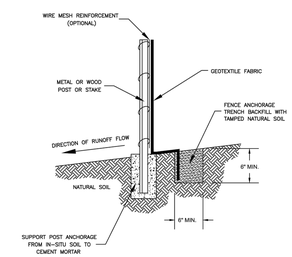

NOTE: DEPENDING UPON CONFIGURATION, ATTACH FABRIC TO WIRE MESH W/HOG RINGS, STEEL POSTS W/TIE WIRES, WOOD POSTS W/NAILS.

VILLAGE OF WHEELING ILLINOIS

VILLAGE OF WHEELING
ENGINEERING DIVISION
2 COMMUNITY BOULEVARD
WHEELING, IL 60090
WWW.WHEELINGIL.GOV

SILT FENCE INSTALLATION STANDARD

VILLAGE OF WHEELING
SPECIFICATIONS AND DETAILS
FILE LOCATION
N:\ENGINEERING\STANDARDS\EROSION CONTROL

REVISIONS	
S.W.	09-01-05 AUTOCAD FILE
S.W.	11-07-01 AS PER COMMENTS
C.J.C.	03-09-06 AUTOCAD FILE

DATE	REVISIONS	DRAWN BY
-	-	-
-	-	-
-	-	-
-	-	-
-	-	-
-	-	-
-	-	-
-	-	-
-	-	-
-	-	-

Manhard CONSULTING LTD

900 Woodlands Parkway, Vernon Hills, IL 60061 ph 847.634.0550 fx 847.634.0095 manhard.com
Civil Engineers • Surveyors • Water Resource Engineers • Water & Wastewater Engineers
Construction Managers • Environmental Scientists • Landscape Architects • Planners

Exhibit received May 17, 2016

NORTHGATE CROSSING - PHASE 3

WHEELING, COOK COUNTY, ILLINOIS

SOIL EROSION & SEDIMENT CONTROL PLAN DETAILS

PROJ. MGR.: JDF
PROJ. ASSOC.: DAM
DRAWN BY: ----
DATE: 05-17-16
SCALE: 1"=20'

SHEET 04 OF 13

KNZWH

© 2016 MANHARD CONSUL TING, LTD. ALL RIGHTS RESERVED

PENDING APPROVAL - NOT FOR CONSTRUCTION

May 17, 2016 - 10:17 Dwg Name: P:\Kmzwh\dwg\Eng\Tmp0 Set\03 SOIL EROSION & SEDIMENT CONTROL PLAN.dwg Updated By: dmcallen

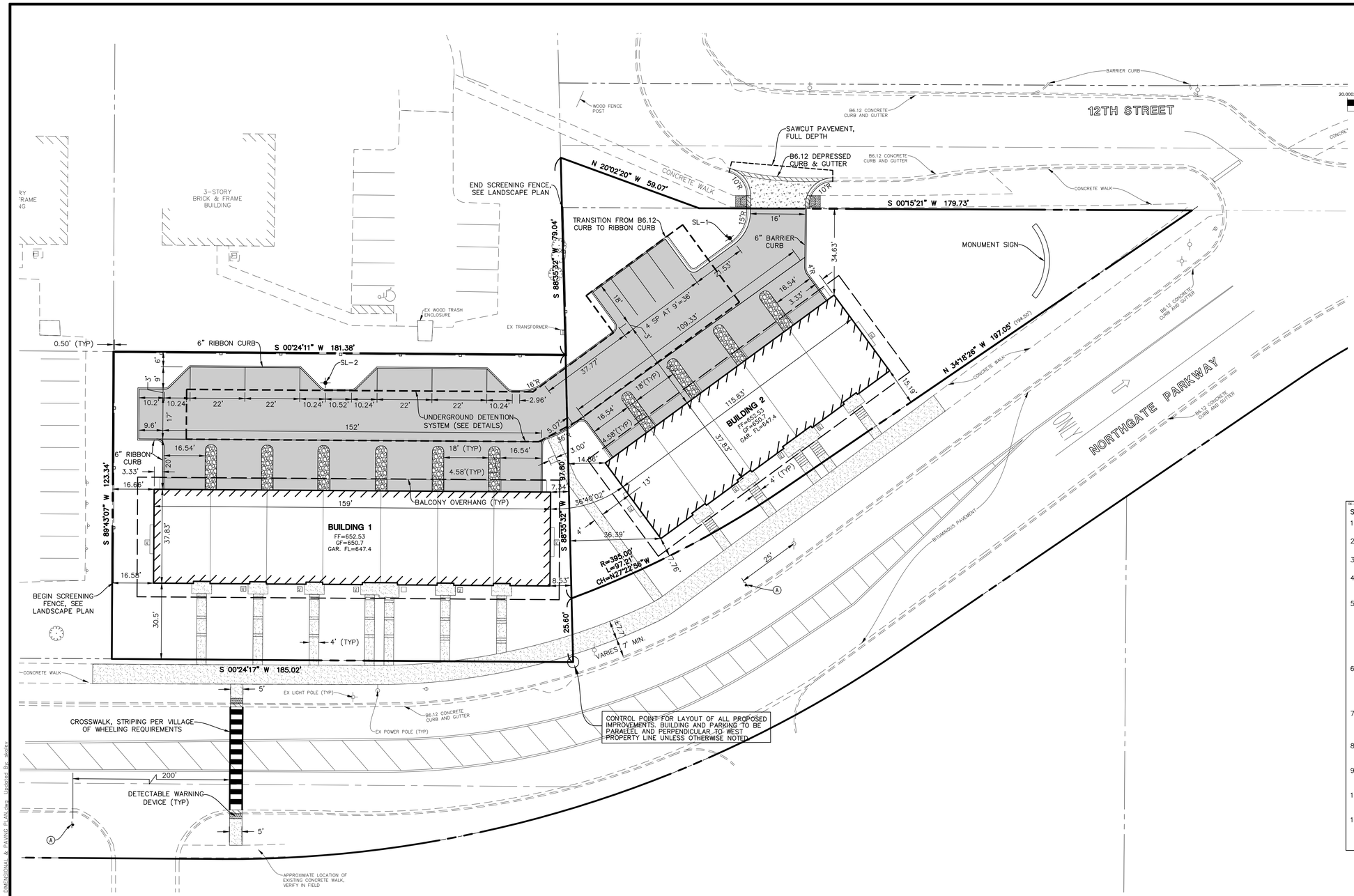

GRAPHIC SCALE

20.0002 0 10.0001 40.0004 80.0009

SCALE: 1"=20.0002'

06-01-15

SITE DATA

SITE AREA	44,302 S.F. (1.02 AC)
IMPERVIOUS SURFACE AREA	0.58 AC
EXISTING ZONING	R-4

SIGN LEGEND

(A) K-6534 (30" X 30") PEDESTRIAN CROSSING SIGN WITH 5' MOUNTING HEIGHT FROM BOTTOM

06-01-15

SITE DIMENSIONAL AND PAVING NOTES:

1. ALL DIMENSIONS ARE FACE OF CURB TO FACE OF CURB OR BUILDING FOUNDATION UNLESS NOTED OTHERWISE.
2. ALL PROPOSED CURB AND GUTTER SHALL BE B6.12 UNLESS OTHERWISE NOTED.
3. ALL CURB RADII SHALL BE 3' MEASURED TO FACE OF CURB UNLESS NOTED OTHERWISE.
4. TIE ALL PROPOSED CURB AND GUTTER TO EXISTING CURB AND GUTTER WITH 2-#6 BARS x 18" LONG DOWELED INTO EXISTING CURB.
5. BUILDING DIMENSIONS AND ADJACENT PARKING HAVE BEEN PREPARED BASED UPON ARCHITECTURAL INFORMATION CURRENT AT THE DATE OF THIS DRAWING. SUBSEQUENT ARCHITECTURAL CHANGES MAY EXIST. THEREFORE CONTRACTOR SHALL REFER TO ARCHITECTURAL PLANS FOR PRECISE BUILDING DIMENSIONS AND NOTIFY THE ARCHITECT AND ENGINEER OF ANY DISCREPANCIES PRIOR TO CONSTRUCTION. BUILDING DIMENSIONS SHOWN SHOULD NOT BE USED FOR CONSTRUCTION LAYOUT OF BUILDING.
6. IMPROVEMENTS ADJACENT TO BUILDING, IF SHOWN, SUCH AS TRUCK DOCK, RETAINING WALLS, SIDEWALKS, CURBING, FENCES, CANOPIES, RAMPS, HANDICAP ACCESS, PLANTERS, DUMPSTERS, AND TRANSFORMERS ETC. HAVE BE SHOWN FOR APPROXIMATE LOCATION ONLY. REFER TO ARCHITECTURAL PLANS FOR EXACT LOCATIONS, SPECIFICATIONS AND DETAILS.
7. LOCATION OF PRIVATE SIDEWALKS SHALL BE COORDINATED WITH PROPOSED DOORWAY. CONTRACTOR TO VERIFY ACTUAL BUILDING PLAN LOCATIONS WITH ARCHITECT/DEVELOPER PRIOR TO CONSTRUCTING THE SIDEWALKS.
8. ALL ROADWAY AND PARKING LOT SIGNAGE, STRIPING, SYMBOLS, ETC. SHALL BE IN ACCORDANCE WITH LATEST JURISDICTIONAL GOVERNMENTAL ENTITY DETAILS.
9. SOME EXISTING ITEMS TO BE REMOVED HAVE BEEN DELETED FROM THIS PLAN FOR CLARITY. SEE DEMOLITION PLAN FOR ITEMS DELETED.
10. DEPRESS CURB & GUTTER AT ALL SIDEWALK AND PATH LOCATIONS FOR HANDICAP ACCESS AS PER FEDERAL AND STATE STANDARDS.
11. THE CONTRACTOR SHALL CONTACT J.U.L.I.E. (1-800-892-0123) PRIOR TO ANY WORK TO LOCATE UTILITIES AND SHALL CONTACT THE OWNER SHOULD UTILITIES APPEAR TO BE IN CONFLICT WITH THE PROPOSED

06-01-15

PAVEMENT LEGEND

TOWNHOME DRIVEWAY PAVEMENT
2 1/2" BITUMINOUS SURFACE COURSE, HOT-MIX ASPHALT, MIX D N50 (TO BE INSTALLED IN TWO LIFTS)
6" CA-6, CRUSHED LIMESTONE, TYPE B

CONCRETE SIDEWALK
5" PORTLAND CEMENT CONCRETE
4" COMPACTED AGGREGATE BASE, TYPE B

CONCRETE PAVEMENT
8" PORTLAND CEMENT CONCRETE PAVEMENT W/ 6 X 6 W1.4 WWF
4" COMPACTED AGGREGATE BASE, TYPE B

GRAVEL ISLANDS
SEE LANDSCAPE PLANS

Exhibit received May 17, 2016

DATE	REVISIONS	DRAWN BY

Manhard CONSULTING LTD
900 Woodlands Parkway, Vernon Hills, IL 60061 ph:847.634.5550 fx:847.634.0069 manhard.com
Civil Engineers • Water Resource Engineers • Structural Engineers • Surveyors
Construction Managers • Environmental Scientists • Landscape Architects • Planners

NORTHGATE CROSSING - PHASE 3

WHEELING, COOK COUNTY, ILLINOIS

SITE DIMENSIONAL & PAVING PLAN

PROJ. MGR.: JDF
PROJ. ASSOC.: DAM
DRAWN BY: ----
DATE: 05-17-16
SCALE: 1"=20'

SHEET 05 OF 13

KNZWH

© 2015 MANHARD CONSULTING, LTD. ALL RIGHTS RESERVED

PENDING APPROVAL - NOT FOR CONSTRUCTION

May 17, 2016 - 16:47 Dwg Name: P:\Kzwh\Kzwh\Eng\Final Drawings\Plan Set\05 SITE DIMENSIONAL & PAVING PLAN.dwg Updated By: skotev

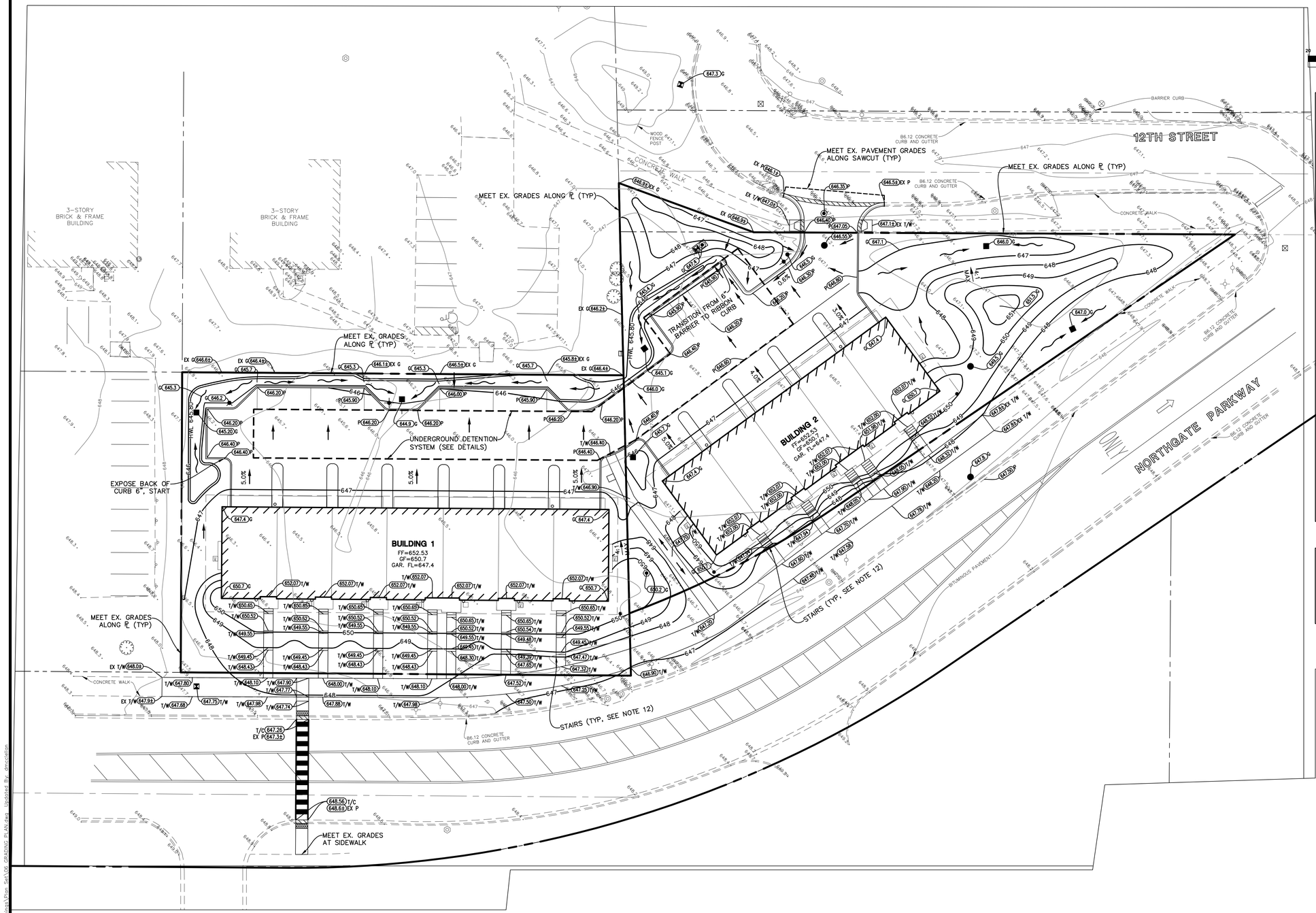

GRAPHIC SCALE

20 0 10 40 80

SCALE: 1"=20'

GRADING NOTES: (PART ONE)

1. PAVEMENT SLOPES THROUGH HANDICAP ACCESSIBLE PARKING AREAS SHALL BE 2.00% MAXIMUM IN ANY DIRECTION.
2. ALL HANDICAP RAMPS SHALL BE CONSTRUCTED WITH A MAXIMUM CROSS SLOPE OF 2.00% OR LESS.
3. MEET EXISTING GRADE AT PROPERTY LIMITS UNLESS NOTED OTHERWISE.
4. CONTRACTOR SHALL REFER TO THE SOIL EROSION AND SEDIMENT CONTROL PLAN AND DETAILS FOR CONSTRUCTION SCHEDULING AND EROSION CONTROL MEASURES TO BE INSTALLED PRIOR TO BEGINNING GRADING OPERATIONS.
5. THE CONTRACTOR SHALL CONTACT J.U.L.I.E. (1-800-892-0123) PRIOR TO ANY WORK TO LOCATE UTILITIES AND SHALL CONTACT THE OWNER SHOULD UTILITIES APPEAR TO BE IN CONFLICT WITH THE PROPOSED IMPROVEMENT.
6. THE CONTRACTOR IS SPECIFICALLY CAUTIONED THAT THE LOCATION AND/OR ELEVATION OF EXISTING UTILITIES AS SHOWN ON THESE PLANS IS BASED ON RECORDS OF THE VARIOUS UTILITY COMPANIES, AND WHERE POSSIBLE, MEASUREMENTS TAKEN IN THE FIELD. THE INFORMATION IS NOT TO BE RELIED ON AS BEING EXACT OR COMPLETE. THE CONTRACTOR MUST CALL THE APPROPRIATE UTILITY COMPANIES AT LEAST 72 HOURS BEFORE ANY EXCAVATION TO REQUEST EXACT FIELD LOCATION OF UTILITIES. IT SHALL BE THE RESPONSIBILITY OF THE CONTRACTOR TO RELOCATE ALL EXISTING UTILITIES WHICH CONFLICT WITH THE PROPOSED IMPROVEMENTS SHOWN ON THE PLANS.
7. IF ANY EXISTING STRUCTURES TO REMAIN ARE DAMAGED DURING CONSTRUCTION IT SHALL BE THE CONTRACTORS RESPONSIBILITY TO REPAIR AND/OR REPLACE THE EXISTING STRUCTURE AS NECESSARY TO RETURN IT TO EXISTING CONDITION OR BETTER.
8. ALL UNSURFACED AREAS DISTURBED BY GRADING OPERATION SHALL RECEIVE 6 INCHES OF TOPSOIL. CONTRACTOR SHALL APPLY STABILIZATION FABRIC TO ALL SLOPES 3H:1V OR STEEPER. CONTRACTOR SHALL STABILIZE DISTURBED AREAS IN ACCORDANCE WITH GOVERNING SPECIFICATIONS UNTIL A HEALTHY STAND OF VEGETATION IS OBTAINED.
9. EXISTING TOPOGRAPHY SHOWN REPRESENTS SITE CONDITIONS AS PREPARED BY COMPASS SURVEYING LTD. ON 10-08-15. CONTRACTOR SHALL FIELD CHECK EXISTING ELEVATIONS AND CONDITIONS PRIOR TO CONSTRUCTION AND NOTIFY ARCHITECT AND ENGINEER OF ANY DISCREPANCIES PRIOR TO STARTING CONSTRUCTION. IF THE CONTRACTOR DOES NOT ACCEPT EXISTING TOPOGRAPHY AS SHOWN ON THE PLANS, WITHOUT EXCEPTION, THEN THE CONTRACTOR SHALL SUPPLY, AT THEIR EXPENSE, A TOPOGRAPHIC SURVEY BY A REGISTERED LAND SURVEYOR TO THE OWNER FOR REVIEW.
10. TRANSITIONS FROM DEPRESSED CURB TO FULL HEIGHT CURB SHALL BE TAPERED AT 1:2 UNLESS OTHERWISE NOTED.
11. PROPOSED STAIRS ARE 7" RISERS WITH 11" TREADS.

STORMWATER DETENTION SUMMARY:

DETENTION VOLUME REQUIRED: 0.28 AC-FT
(VILLAGE OF WHEELING)
DETENTION VOLUME PROVIDED: 0.30 AC-FT
TOTAL VOLUME CONTROL REQUIRED: 0.05 AC-FT
VOLUME CONTROL PROVIDED: 0.06 AC-FT

DATE	REVISIONS	DRAWN BY

Manhard CONSULTING LTD
800 Woodlands Parkway, Vernon Hills, IL 60061 ph:847.634.0050 fx:847.634.0089 manhard.com
Civil Engineers • Land Surveyors • Water Resource Engineers • Water & Wastewater Engineers
Construction Managers • Environmental Scientists • Landscape Architects • Planners

NORTHGATE CROSSING - PHASE 3

WHEELING, COOK COUNTY, ILLINOIS

GRADING PLAN

Exhibit received May 17, 2016

PROJ. MGR.: JDF
PROJ. ASSOC.: DAM
DRAWN BY: ----
DATE: 05-17-16
SCALE: 1"=20'

SHEET 06 OF 13

KNZWH

© 2015 MANHARD CONSULTING, LTD. ALL RIGHTS RESERVED

PENDING APPROVAL - NOT FOR CONSTRUCTION

May 17, 2016 - 16:46 Dwg Name: P:\Vorsah\Civil\Eng\Tmp Drawings\Proj. Set\06 GRADING PLAN.dwg Updated By: dmcollins

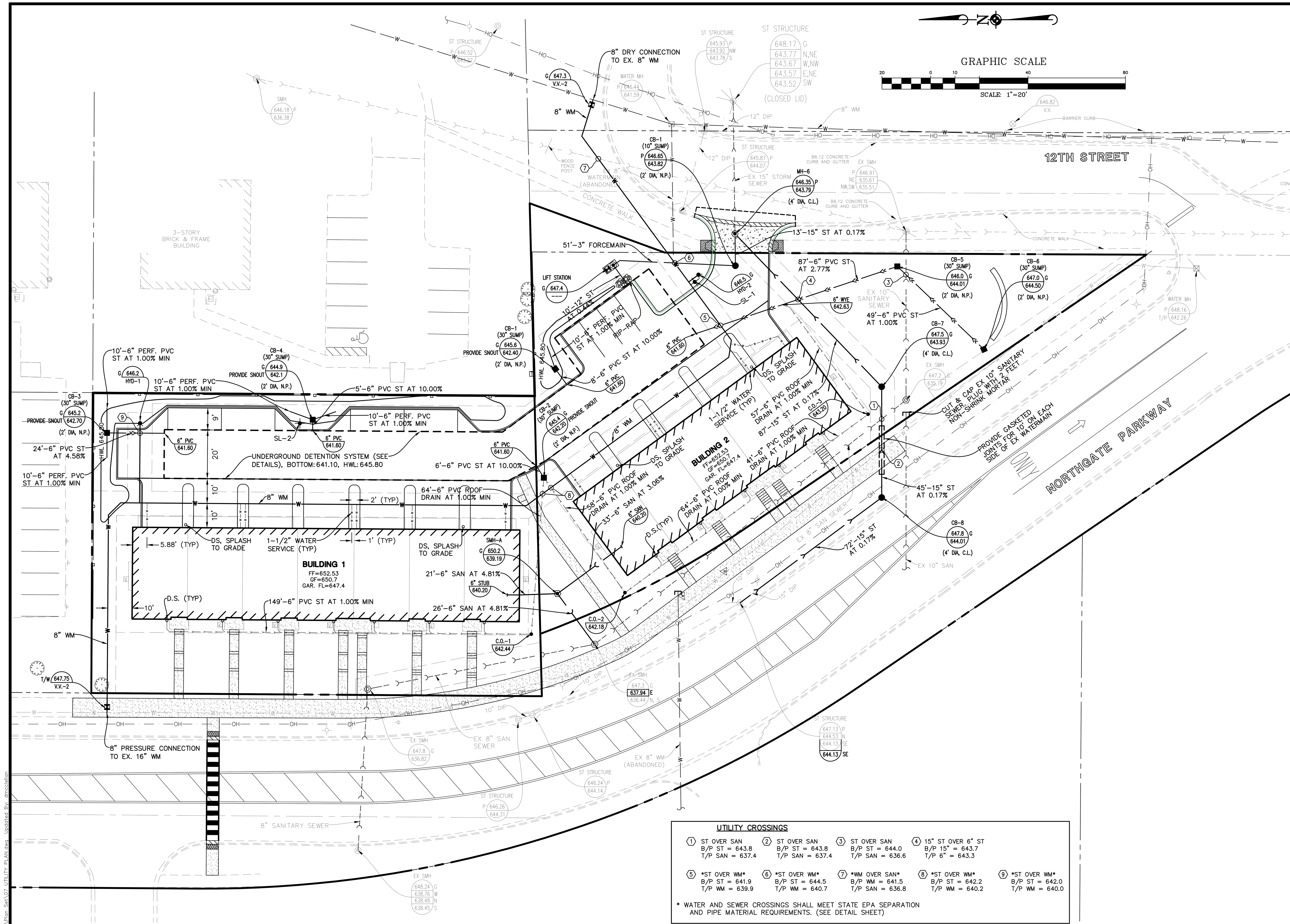

UTILITY CROSSINGS

⟨1⟩ ST OVER SAN B/P ST = 643.8 T/P SAN = 637.4	⟨2⟩ ST OVER SAN B/P ST = 643.8 T/P SAN = 637.4	⟨3⟩ ST OVER SAN B/P ST = 644.0 T/P SAN = 636.6	⟨4⟩ 15" ST OVER 6" ST B/P 15" = 643.7 T/P 6" = 643.3	
⟨5⟩ *ST OVER WM* B/P ST = 641.9 T/P WM = 639.9	⟨6⟩ *ST OVER WM* B/P ST = 644.5 T/P WM = 640.7	⟨7⟩ *WM OVER SAN* B/P WM = 641.5 T/P SAN = 636.8	⟨8⟩ *ST OVER WM* B/P ST = 642.2 T/P WM = 640.2	⟨9⟩ *ST OVER WM* B/P ST = 642.0 T/P WM = 640.0

* WATER AND SEWER CROSSINGS SHALL MEET STATE EPA SEPARATION AND PIPE MATERIAL REQUIREMENTS. (SEE DETAIL SHEET)

06-01-15

UTILITY NOTES:

1. ALL UTILITY DIMENSIONS ARE TO CENTER OF PIPE OR CENTER OF STRUCTURE UNLESS OTHERWISE NOTED.
2. BUILDING DIMENSIONS AND ADJACENT UTILITY LAYOUT HAVE BEEN PREPARED BASED UPON ARCHITECTURAL INFORMATION CURRENT AT THE DATE OF THIS DRAWING. SUBSEQUENT ARCHITECTURAL CHANGES MAY EXIST. THEREFORE CONTRACTOR SHALL REFER TO ARCHITECTURAL PLANS FOR PRECISE BUILDING DIMENSIONS AND EXACT UTILITY ENTRANCE LOCATIONS AND NOTIFY THE ARCHITECT AND ENGINEER OF ANY DISCREPANCIES PRIOR TO CONSTRUCTION.
3. THE CONTRACTOR SHALL CONTACT J.U.L.I.E. (1-800-892-0123) PRIOR TO ANY WORK TO LOCATE UTILITIES AND SHALL CONTACT THE OWNER SHOULD UTILITIES APPEAR TO BE IN CONFLICT WITH THE PROPOSED IMPROVEMENT.
4. ROUTING OF GAS, ELECTRIC AND TELEPHONE SERVICES IF SHOWN ARE APPROXIMATE ONLY AND SUBJECT TO CHANGE BASED UPON FINAL REVIEW AND APPROVAL BY RESPECTIVE UTILITY COMPANIES AND OWNER. CONTRACTOR SHALL CONTACT EACH UTILITY COMPANY AND COORDINATE FINAL LOCATIONS FOR ALL UTILITY SERVICES PRIOR TO START OF CONSTRUCTION.
5. CONTRACTOR SHALL EXCAVATE AND VERIFY ALL EXISTING SEWER, WATER MAIN AND DRY UTILITY LOCATIONS, SIZES, CONDITIONS & ELEVATIONS AT PROPOSED POINTS OF CONNECTION AND CROSSINGS PRIOR TO ANY UNDERGROUND CONSTRUCTION AND NOTIFY THE OWNER OF ANY DISCREPANCIES OR CONFLICTS.
6. LIGHTING AND UNDERGROUND CABLE IF SHOWN ON PLANS ARE FOR APPROXIMATE LOCATION ONLY. REFER TO ARCHITECTURAL PLANS FOR SPECIFICATIONS AND DETAILS.
7. THE CONTRACTOR SHALL ADJUST RIM ELEVATIONS OF ALL EXISTING STRUCTURES TO PROPOSED FINISH GRADES.
8. CONTRACTOR TO VERIFY LOCATION, SIZES, AND ELEVATION OF ALL BUILDING SERVICE LOCATIONS WITH ARCHITECTURAL PLANS.
9. AT LOCATIONS WHERE WATER MAIN CROSSES BENEATH OR LESS THAN 18" ABOVE A SEWER, PROVIDE WATER MAIN PROTECTION PER STANDARD SPECIFICATIONS FOR SEWER AND WATER MAIN CONSTRUCTION IN ILLINOIS, LATEST EDITION.
10. ELEVATIONS GIVEN FOR STORM SEWER STRUCTURES LOCATED IN CURB LINE ARE PAVEMENT ELEVATIONS.
11. ALL WATER MAIN SHALL BE 5'-6" BELOW FINISHED GRADE TO TOP OF MAINS UNLESS NOTED OTHERWISE.
12. ALL EXISTING UTILITIES SHOWN ARE NOT TO BE INTERPRETED AS THE EXACT ELEVATION OR LOCATION, OR AS THE ONLY OBSTACLES THAT MAY OCCUR ON THE SITE. CONTRACTOR SHALL VERIFY EXISTING CONDITIONS AND PROCEED WITH CAUTION AROUND ANY ANTICIPATED FEATURES.
13. THE UNDERGROUND UTILITY INFORMATION AS SHOWN HERE ON IS BASED, IN PART, UPON INFORMATION FURNISHED BY UTILITY COMPANIES AND THE LOCAL MUNICIPALITY. WHILE THIS INFORMATION IS BELIEVED TO BE RELIABLE, ITS ACCURACY AND COMPLETENESS CANNOT BE GUARANTEED NOR CERTIFIED TO.
14. ALL SANITARY AND STORM SEWER LENGTHS SHOWN ARE CENTER OF MANHOLE TO CENTER OF MANHOLE OR STORM MANHOLE TO FES.
15. PROVIDE CONCRETE COLLAR FOR ALL MANHOLES & VALVE VAULTS IN PAVEMENT, NOT ADJACENT TO CURB. SEE CONCRETE COLLAR DETAIL ON DETAIL SHEET.
16. CONTRACTOR SHALL CORE AND BOOT ALL PIPE ENTRANCES TO EXISTING SANITARY MANHOLES.
17. EXTERNAL CHIMNEY SEALS ARE REQUIRED ON PROPOSED AND ADJUSTED EXISTING SANITARY MANHOLES.
18. SOME EXISTING ITEMS TO BE REMOVED HAVE BEEN DELETED FROM THIS PLAN FOR CLARITY. SEE DEMOLITION PLAN FOR ITEMS DELETED.
19. ALL D.I. WATERMAIN FITTINGS SHALL BE WRAPPED.
20. EXISTING DETENTION BASIN HWL = 647.5
NWL = 641.0

MWRD NOTES

A. REFERENCED SPECIFICATIONS

1. ALL CONSTRUCTION SHALL BE IN ACCORDANCE WITH THE APPLICABLE SECTIONS OF THE FOLLOWING, EXCEPT AS MODIFIED HEREIN OR ON THE PLANS:
   * STANDARD SPECIFICATIONS FOR ROAD AND BRIDGE CONSTRUCTION (LATEST EDITION), BY THE ILLINOIS DEPARTMENT OF TRANSPORTATION (IDOT SS) FOR ALL IMPROVEMENTS EXCEPT SANITARY SEWER AND WATER MAIN CONSTRUCTION;
   * STANDARD SPECIFICATIONS FOR WATER AND SEWER MAIN CONSTRUCTION IN ILLINOIS, LATEST EDITION (SSWS) FOR SANITARY SEWER AND WATER MAIN CONSTRUCTION;
   * VILLAGE OF HOMEWOOD MUNICIPAL CODE;
   * THE METROPOLITAN WATER RECLAMATION DISTRICT OF GREATER CHICAGO (MWRD) WATERSHED MANAGEMENT ORDINANCE AND TECHNICAL GUIDANCE MANUAL;
   * IN CASE OF CONFLICT BETWEEN THE APPLICABLE ORDINANCES NOTED, THE MORE STRINGENT SHALL TAKE PRECEDENCE AND SHALL CONTROL ALL CONSTRUCTION.

B. NOTIFICATIONS

1. THE MWRD LOCAL SEWER SYSTEMS SECTION FIELD OFFICE MUST BE NOTIFIED AT LEAST TWO (2) WORKING DAYS PRIOR TO THE COMMENCEMENT OF ANY WORK (CALL 708-588-4055).
2. THE VILLAGE OF HOMEWOOD ENGINEERING DEPARTMENT AND PUBLIC MUST BE NOTIFIED AT LEAST 24 HOURS PRIOR TO THE START OF CONSTRUCTION AND PRIOR TO EACH PHASE OF WORK. CONTRACTOR SHALL DETERMINE ITEMS REQUIRING INSPECTION PRIOR TO START OF CONSTRUCTION OR EACH WORK PHASE.
3. THE CONTRACTOR SHALL NOTIFY ALL UTILITY COMPANIES PRIOR TO BEGINNING CONSTRUCTION FOR THE EXACT LOCATIONS OF UTILITIES AND FOR THEIR PROTECTION DURING CONSTRUCTION. IF EXISTING UTILITIES ARE ENCOUNTERED THAT CONFLICT IN LOCATION WITH NEW CONSTRUCTION, IMMEDIATELY NOTIFY THE ENGINEER SO THAT THE CONFLICT CAN BE RESOLVED. CALL J.U.L.I.E. AT 1-800-892-0123.

C. GENERAL NOTES

1. ALL ELEVATIONS SHOWN ON PLANS REFERENCE THE NORTH AMERICAN VERTICAL DATUM OF 1988 (NAVD88). CONVERSION FACTOR IS 0.00 FT.
2. MWRD, THE MUNICIPALITY AND THE OWNER OR OWNER'S REPRESENTATIVE SHALL HAVE THE AUTHORITY TO INSPECT, APPROVE, AND REJECT THE CONSTRUCTION IMPROVEMENTS.
3. THE CONTRACTOR(S) SHALL INDEMNIFY THE OWNER, ENGINEER, MUNICIPALITY, MWRD, AND THEIR AGENTS, ETC., FROM ALL LIABILITY INVOLVED WITH THE CONSTRUCTION, INSTALLATION, OR TESTING OF THIS WORK ON THE PROJECT.
4. THE PROPOSED IMPROVEMENTS MUST BE CONSTRUCTED IN ACCORDANCE WITH THE ENGINEERING PLANS AS APPROVED BY MWRD AND THE MUNICIPALITY UNLESS CHANGES ARE APPROVED BY MWRD, THE MUNICIPALITY, OR AUTHORIZED AGENT. THE CONSTRUCTION DETAILS, AS PRESENTED ON THE PLANS, MUST BE FOLLOWED. PROPER CONSTRUCTION TECHNIQUES MUST BE FOLLOWED ON THE IMPROVEMENTS INDICATED ON THE PLANS.
5. THE LOCATION OF VARIOUS UNDERGROUND UTILITIES WHICH ARE SHOWN ON THE PLANS ARE FOR INFORMATION ONLY AND REPRESENT THE BEST KNOWLEDGE OF THE ENGINEER. VERIFY LOCATIONS AND ELEVATIONS PRIOR TO BEGINNING THE CONSTRUCTION OPERATIONS.
6. ANY EXISTING PAVEMENT, SIDEWALK, DRIVEWAY, ETC., DAMAGED DURING CONSTRUCTION OPERATIONS AND NOT CALLED FOR TO BE REMOVED SHALL BE REPLACED AT THE EXPENSE OF THE CONTRACTOR.
7. MATERIAL AND COMPACTION TESTING SHALL BE PERFORMED IN ACCORDANCE WITH THE REQUIREMENTS OF THE MUNICIPALITY, MWRD, AND OWNER.
8. THE UNDERGROUND CONTRACTOR SHALL MAKE ALL NECESSARY ARRANGEMENTS TO NOTIFY ALL INSPECTION AGENCIES.
9. ALL NEW AND EXISTING UTILITY STRUCTURES ON SITE AND IN AREAS DISTURBED DURING CONSTRUCTION SHALL BE ADJUSTED TO FINISH GRADE PRIOR TO FINAL INSPECTION.
10. RECORD DRAWINGS SHALL BE KEPT BY THE CONTRACTOR AND SUBMITTED TO THE ENGINEER AS SOON AS UNDERGROUND IMPROVEMENTS ARE COMPLETED. FINAL PAYMENTS TO THE CONTRACTOR SHALL BE HELD UNTIL THEY ARE RECEIVED. ANY CHANGES IN LENGTH, LOCATION OR ALIGNMENT SHALL BE SHOWN IN RED. ALL WYES OR BENDS SHALL BE LOCATED FROM THE DOWNSTREAM MANHOLE. ALL VALVES, B-BOXES, TEES OR BENDS SHALL BE TIED TO A FIRE HYDRANT.

D. SANITARY SEWER

1. THE CONTRACTOR SHALL TAKE MEASURES TO PREVENT ANY POLLUTED WATER, SUCH AS GROUND AND SURFACE WATER, FROM ENTERING THE EXISTING SANITARY SEWERS.
2. A WATER-TIGHT PLUG SHALL BE INSTALLED IN THE DOWNSTREAM SEWER PIPE AT THE POINT OF SEWER CONNECTION PRIOR TO COMMENCING ANY SEWER CONSTRUCTION. THE PLUG SHALL REMAIN IN PLACE UNTIL REMOVAL IS AUTHORIZED BY THE MUNICIPALITY AND/OR MWRD AFTER THE SEWERS HAVE BEEN TESTED AND ACCEPTED.
3. DISCHARGING ANY UNPOLLUTED WATER INTO THE SANITARY SEWER SYSTEM FOR THE PURPOSE OF SEWER FLUSHING OF LINES FOR THE DEFLECTION TEST SHALL BE PROHIBITED WITHOUT PRIOR APPROVAL FROM THE MUNICIPALITY OR MWRD.
4. ALL SANITARY SEWER CONSTRUCTION SHALL BE IN ACCORDANCE WITH THE STANDARD SPECIFICATIONS FOR WATER AND SEWER MAIN CONSTRUCTION IN ILLINOIS (LATEST EDITION).
5. ALL FLOOR DRAINS SHALL DISCHARGE TO THE SANITARY SEWER SYSTEM.
6. ALL DOWNSPOUTS AND FOOTING DRAINS SHALL DISCHARGE TO THE STORM SEWER SYSTEM.
7. ALL SANITARY SEWER PIPE MATERIALS AND JOINTS (AND STORM SEWER PIPE MATERIALS AND JOINTS IN A COMBINED SEWER AREA) SHALL CONFORM TO THE FOLLOWING:

PIPE MATERIAL	PIPE SPECIFICATIONS	JOINT SPECIFICATIONS
VITRIFIED CLAY PIPE	ASTM C-700	ASTM C-425
REINFORCED CONCRETE SEWER PIPE	ASTM C-76	ASTM C-443
CAST IRON SOIL PIPE	ASTM A-74	ASTM C-564
DUCTILE IRON PIPE	ANSI A21.51	ANSI A21.11
POLYVINYL CHLORIDE (PVC) PIPE		
6-INCH TO 15-INCH DIAMETER SDR 26	ASTM D-3034	ASTM D-3212
18-INCH TO 27-INCH DIAMETER F/DY=46	ASTM F-679	ASTM D-3212
HIGH DENSITY POLYETHYLENE (HDPE)	ASTM D-3350 ASTM D-3035	ASTM D-3261,F-2620 (HEAT FUSION) ASTM D-3212,F-477 (GASKETED)
WATER MAIN QUALITY PVC		
4-INCH TO 36-INCH	ASTM D-2241	ASTM D-2672 OR ASTM D-3139
4-INCH TO 12-INCH	AWWA C900	ASTM D-3212
14-INCH TO 48-INCH	AWWA C905	ASTM D-3212

8. ALL SANITARY SEWER CONSTRUCTION (AND STORM SEWER CONSTRUCTION IN COMBINED SEWER AREAS), REQUIRES STONE BEDDING WITH STONE ¼ "TO 1"IN SIZE, WITH MINIMUM BEDDING THICKNESS EQUAL TO ¼ THE OUTSIDE DIAMETER OF THE SEWER PIPE, BUT NOT LESS THAN FOUR (4) INCHES NOR MORE THAN EIGHT (8) INCHES. MATERIAL SHALL BE CA-11 OR CA-13 AND SHALL BE EXTENDED AT LEAST 12" ABOVE THE TOP OF THE PIPE WHEN USING PVC.
9. 'BAND SEAL" OR SIMILAR NON-SHEAR FLEXIBLE-TYPE COUPLINGS SHALL BE USED IN THE CONNECTION OF SEWER PIPES OF DISSIMILAR MATERIALS.
10. BELOW THE FLOOD PROTECTION ELEVATION (FPE = BFE + 2 FEET), ALL SANITARY SEWER MANHOLES AND STRUCTURES SHALL BE PROVIDED WITH BOLTED, WATERTIGHT COVERS. SANITARY LIDS SHALL BE CONSTRUCTED WITH A CONCEALED PICKHOLE AND WATERTIGHT GASKET WITH THE WORD "SANITARY" CAST INTO THE LID.
11. WHEN CONNECTING TO AN EXISTING SEWER MAIN BY MEANS OTHER THAN AN EXISTING WYE, TEE, OR AN EXISTING MANHOLE, ONE OF THE FOLLOWING METHODS SHALL BE USED:
    a) A CIRCULAR SAW-CUT OF SEWER MAIN BY PROPER TOOLS ("SHEWER-TAP" MACHINE OR SIMILAR) AND PROPER INSTALLATION OF HUBWYE SADDLE OR HUB-TEE SADDLE.
    b) REMOVE AN ENTIRE SECTION OF PIPE (BREAKING ONLY THE TOP OF ONE BELL) AND REPLACE WITH A WYE OR TEE BRANCH SECTION.
    c) WITH PIPE CUTTER, NEATLY AND ACCURATELY CUT OUT DESIRED LENGTH OF PIPE FOR INSERTION OF PROPER FITTING, USING "BAND SEAL" OR SIMILAR COUPLINGS TO HOLD IT FIRMLY IN PLACE.
12. WHENEVER A SANITARY/COMBINED SEWER CROSSES UNDER A WATERMAIN, THE MINIMUM VERTICAL DISTANCE FROM THE TOP OF THE SEWER TO THE BOTTOM OF THE WATERMAIN SHALL BE 18 INCHES. FURTHERMORE, A MINIMUM HORIZONTAL DISTANCE OF 10 FEET BETWEEN SANITARY/COMBINED SEWERS AND WATERMAINS SHALL BE MAINTAINED UNLESS: THE SEWER IS LAID IN A SEPARATE TRENCH, KEEPING A MINIMUM 18" VERTICAL SEPARATION; OR THE SEWER IS LAID IN THE SAME TRENCH WITH THE WATERMAIN LOCATED AT THE OPPOSITE SIDE ON A BENCH OF UNDISTURBED EARTH, KEEPING A MINIMUM 18" VERTICAL SEPARATION. IF EITHER THE VERTICAL OR HORIZONTAL DISTANCES DESCRIBED ABOVE CANNOT BE MAINTAINED, OR THE SEWER CROSSES ABOVE THE WATERMAIN, THE SEWER SHALL BE CONSTRUCTED TO WATERMAIN STANDARDS.
13. ALL EXISTING SEPTIC SYSTEMS SHALL BE ABANDONED. ABANDONED TANKS SHALL BE FILLED WITH GRANULAR MATERIAL OR REMOVED.
14. ALL SANITARY MANHOLES, (AND STORM MANHOLES IN COMBINED SEWER AREAS), SHALL HAVE A MINIMUM INSIDE DIAMETER OF 48 INCHES, AND SHALL BE CAST IN PLACE OR PRE-CAST REINFORCED CONCRETE.
15. ALL SANITARY MANHOLES, (AND STORM MANHOLES IN COMBINED SEWER AREAS), SHALL HAVE PRECAST "RUBBER BOOTS" THAT CONFORM TO ASTM C-923 FOR ALL PIPE CONNECTIONS. PRECAST SECTIONS SHALL CONSIST OF MODIFIED GROOVE TONGUE AND RUBBER GASKET TYPE JOINTS.
16. ALL ABANDONED SANITARY SEWERS SHALL BE PLUGGED AT BOTH ENDS WITH AT LEAST 2 FEET LONG NON-SHRINK CONCRETE OR MORTAR PLUG.
17. EXCEPT FOR FOUNDATION/FOOTING DRAINS PROVIDED TO PROTECT BUILDINGS, OR PERFORATED PIPES ASSOCIATED WITH VOLUME CONTROL FACILITIES, DRAIN TILES/FIELD TILES/UNDERDRAINS/PERFORATED PIPES ARE NOT ALLOWED TO BE CONNECTED TO OR TRIBUTARY TO COMBINED SEWERS, SANITARY SEWERS, OR STORM SEWERS TRIBUTARY TO COMBINED SEWERS IN COMBINED SEWER AREAS. CONSTRUCTION OF NEW FACILITIES OF THIS TYPE IS PROHIBITED; AND ALL EXISTING DRAIN TILES AND PERFORATED PIPES ENCOUNTERED WITHIN THE PROJECT AREA SHALL BE PLUGGED OR REMOVED, AND SHALL NOT BE CONNECTED TO COMBINED SEWERS, SANITARY SEWERS, OR STORM SEWERS TRIBUTARY TO COMBINED SEWERS.
18. A BACKFLOW PREVENTER IS REQUIRED FOR ALL DETENTION BASINS TRIBUTARY TO COMBINED SEWERS. REQUIRED BACKFLOW PREVENTERS SHALL BE INSPECTED AND EXERCISED ANNUALLY BY THE PROPERTY OWNER TO ENSURE PROPER OPERATION, AND ANY NECESSARY MAINTENANCES SHALL BE PERFORMED TO ENSURE FUNCTIONALITY. IN THE EVENT OF A SEWER SURCHARGE INTO AN OPEN DETENTION BASIN TRIBUTARY TO COMBINED SEWERS, THE PERMITTEE SHALL ENSURE THAT CLEAN UP AND WASH OUT OF SEWAGE TAKES PLACE WITHIN 48 HOURS OF THE STORM EVENT.

E. EROSION AND SEDIMENT CONTROL

1. THE CONTRACTOR SHALL INSTALL THE EROSION AND SEDIMENT CONTROL DEVICES AS SHOWN ON THE APPROVED EROSION AND SEDIMENT CONTROL PLAN.
2. EROSION AND SEDIMENT CONTROL PRACTICES SHALL BE FUNCTIONAL PRIOR TO HYDROLOGIC DISTURBANCE OF THE SITE.
3. ALL DESIGN CRITERIA, SPECIFICATIONS, AND INSTALLATION OF EROSION AND SEDIMENT CONTROL PRACTICES SHALL BE IN ACCORDANCE WITH THE ILLINOIS URBAN MANUAL.
4. A COPY OF THE APPROVED EROSION AND SEDIMENT CONTROL PLAN SHALL BE MAINTAINED ON THE SITE AT ALL TIMES.
5. INSPECTIONS AND DOCUMENTATION SHALL BE PERFORMED, AT A MINIMUM:
   a) UPON COMPLETION OF INITIAL EROSION AND SEDIMENT CONTROL MEASURES, PRIOR TO ANY SOIL DISTURBANCE.
   b) ONCE EVERY SEVEN (7) CALENDAR DAYS AND WITHIN 24 HOURS OF THE END OF A STORM EVENT WITH GREATER THAN 0.5 INCH OF RAINFALL OR LIQUID EQUIVALENT PRECIPITATION.
6. SOIL DISTURBANCE SHALL BE CONDUCTED IN SUCH A MANNER AS TO MINIMIZE EROSION. IF STRIPPING, CLEARING, GRADING, OR LANDSCAPING ARE TO BE DONE IN PHASES, THE CO-PERMITTEE SHALL PLAN FOR APPROPRIATE SOIL EROSION AND SEDIMENT CONTROL MEASURES.
7. A STABILIZED MAT OF CRUSHED STONE MEETING THE STANDARDS OF THE ILLINOIS URBAN MANUAL SHALL BE INSTALLED AT ANY POINT WHERE TRAFFIC WILL BE ENTERING OR LEAVING A CONSTRUCTION SITE. SEDIMENT OR SOIL REACHING AN IMPROVED PUBLIC RIGHT?OF?WAY, STREET, ALLEY OR PARKING AREA SHALL BE REMOVED BY SCRAPING OR STREET CLEANING AS ACCUMULATIONS WARRANT AND TRANSPORTED TO A CONTROLLED SEDIMENT DISPOSAL AREA.
8. CONCRETE WASHOUT FACILITIES SHALL BE CONSTRUCTED IN ACCORDANCE WITH THE ILLINOIS URBAN MANUAL AND SHALL BE INSTALLED PRIOR TO ANY ON SITE CONSTRUCTION ACTIVITIES INVOLVING CONCRETE.
9. TEMPORARY DIVERSIONS SHALL BE CONSTRUCTED AS NECESSARY TO DIRECT ALL RUNOFF FROM HYDROLOGICALLY DISTURBED AREAS TO AN APPROPRIATE SEDIMENT TRAP OR BASIN. VOLUME CONTROL FACILITIES SHALL NOT BE USED AS TEMPORARY SEDIMENT BASINS.
10. DISTURBED AREAS OF THE SITE WHERE CONSTRUCTION ACTIVITIES HAVE TEMPORARILY OR PERMANENTLY CEASED SHALL BE STABILIZED WITH TEMPORARY OR PERMANENT MEASURES WITHIN SEVEN (7) DAYS.
11. ALL FLOOD PROTECTION AREAS AND VOLUME CONTROL FACILITIES SHALL, AT A MINIMUM, BE PROTECTED WITH A DOUBLE-ROW OF SILT FENCE (OR EQUIVALENT).
12. VOLUME CONTROL FACILITIES SHALL NOT BE CONSTRUCTED UNTIL ALL OF THE CONTRIBUTING DRAINAGE AREA HAS BEEN STABILIZED.
13. SOIL STOCKPILES SHALL, AT A MINIMUM, BE PROTECTED WITH PERIMETER SEDIMENT CONTROLS. SOIL STOCKPILES SHALL NOT BE PLACED IN FLOOD PROTECTION AREAS OR THEIR BUFFERS.
14. EARTHEN EMBANKMENT SIDE SLOPES SHALL BE STABILIZED WITH APPROPRIATE EROSION CONTROL BLANKET.
15. STORM SEWERS THAT ARE OR WILL BE FUNCTIONING DURING CONSTRUCTION SHALL BE PROTECTED BY APPROPRIATE SEDIMENT CONTROL MEASURES.
16. THE CONTRACTOR SHALL EITHER REMOVE OR REPLACE ANY EXISTING DRAIN TILES AND INCORPORATE THEM INTO THE DRAINAGE PLAN FOR THE DEVELOPMENT. DRAIN TILES CANNOT BE TRIBUTARY TO A SANITARY OR COMBINED SEWER.
17. IF DEWATERING SERVICES ARE USED, ADJOINING PROPERTIES AND DISCHARGE LOCATIONS SHALL BE PROTECTED FROM EROSION AND SEDIMENTATION. DEWATERING SYSTEMS SHOULD BE INSPECTED DAILY DURING OPERATIONAL PERIODS. THE SITE INSPECTOR MUST BE PRESENT AT THE COMMENCEMENT OF DEWATERING ACTIVITIES.
18. THE CONTRCTOR SHALL BE RESPONSIBLE FOR TRENCH DEWATERING AND EXCAVATION FOR THE INSTALLATION OF SANITARY SEWERS, STORM SEWERS, WATERMAINS AS WELL AS THEIR SERVICES AND OTHER APPURTENANCES. ANY TRENCH DEWATERING, WHICH CONTAINS SEDIMENT SHALL PASS THROUGH A SEDIMENT SETTLING POND OR EQUALLY EFFECTIVE SEDIMENT CONTROL DEVICE. ALTERNATIVES MAY INCLUDE DEWATERING INTO A SUMP PIT, FILTER BAG OR EXISTING VEGETATED UPSLOPE AREA. SEDIMENT LADEN WATERS SHALL NOT BE DISCHARGE TO WATERWAYS, FLOOD PROTECTION AREAS OR THE COMBINED SEWER SYSTEM.
19. ALL PERMANENT EROSION CONTROL PRACTICES SHALL BE INITIATED WITHIN SEVEN (7) DAYS FOLLOWING THE COMPLETION OF SOIL DISTURBING ACTIVITIES.
20. ALL EROSION AND SEDIMENT CONTROL MEASURES SHALL BE MAINTAINED AND REPAIRED AS NEEDED ON A YEAR-ROUND BASIS DURING CONSTRUCTION AND ANY PERIODS OF CONSTRUCTION SHUTDOWN UNTIL PERMANENT STABILIZATION IS ACHIEVED.
21. ALL TEMPORARY EROSION AND SEDIMENT CONTROL MEASURES SHALL BE REMOVED WITHIN THIRTY (30) DAYS AFTER PERMANENT SITE STABILIZATION.
22. THE EROSION AND SEDIMENT CONTROL MEASURES SHOWN ON THE PLANS ARE THE MINIMUM REQUIREMENTS. ADDITIONAL MEASURES MAY BE REQUIRED, AS DIRECTED BY THE ENGINEER, SITE INSPECTOR, OR MWRD.

© 2015 MANHARD CONSULTING, LTD. ALL RIGHTS RESERVED

DRAWN BY	REVISIONS	DATE

Manhard CONSULTING LTD
900 Woodlands Parkway, Vernon Hills, IL 60061 ph:847.634.5550 fx:847.634.0095 manhard.com
Civil Engineers • Surveyors • Water Resource Engineers • Water & Wastewater Engineers
Construction Managers • Environmental Scientists • Landscape Architects • Planners

Exhibit received May 17, 2016

NORTHGATE CROSSING - PHASE 3
WHEELING, COOK COUNTY, ILLINOIS
UTILITY PLAN

PROJ. MGR.: JDF
PROJ. ASSOC.: DAM
DRAWN BY: ----
DATE: 05-17-16
SCALE: 1"=20'

SHEET 07 OF 13
KNZWH

PENDING APPROVAL - NOT FOR CONSTRUCTION

May 17, 2016 - 16:34 Dwg Name: P:\Knzwh\dwg\Eng\Final Drawings\Plan Set\07 UTILITY PLAN.dwg Updated By: dmcclellan

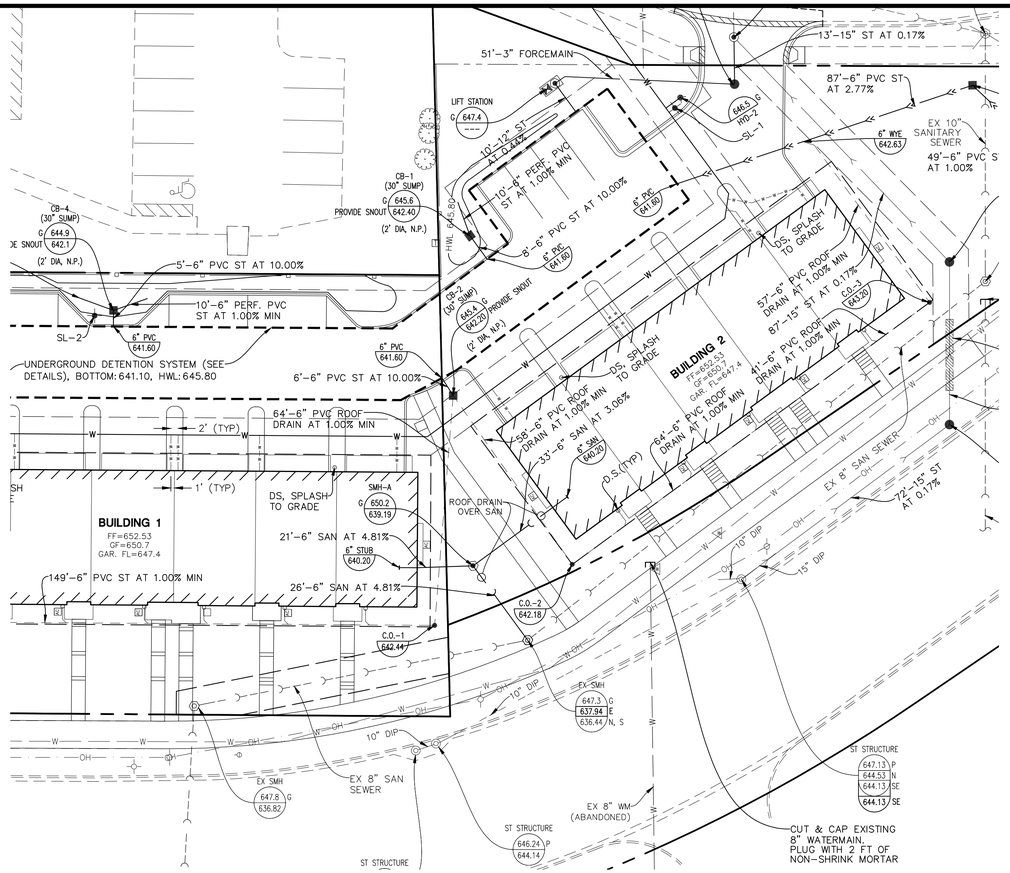

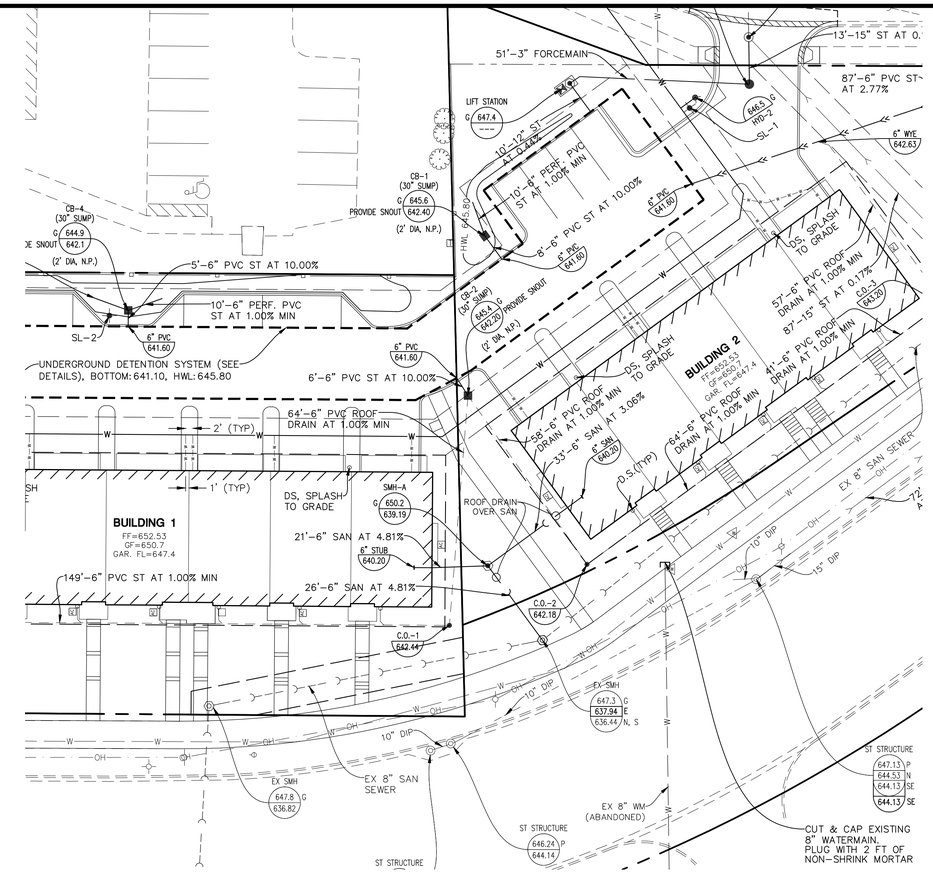

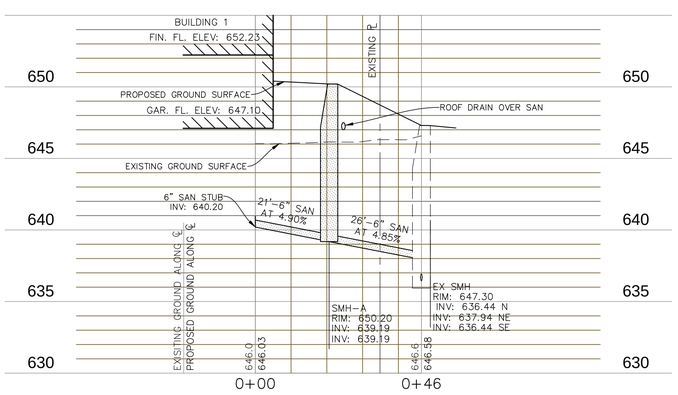

PROPOSED SANITARY SEWER PROFILE: BUILDING 1 TO EX SANITARY MANHOLE
SCALE: H: 1"=20' V: 1"=5'

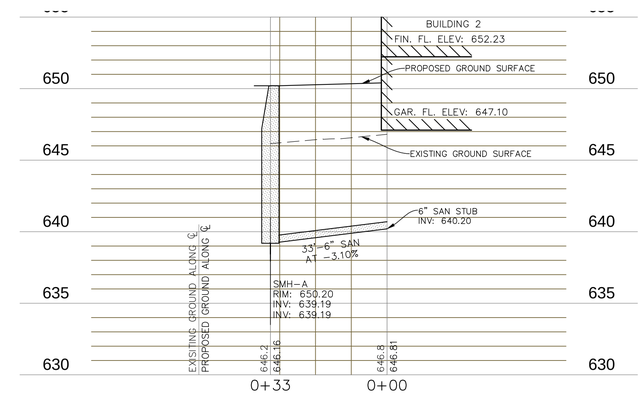

PROPOSED SANITARY SEWER PROFILE: BUILDING 2 TO SMH-A
SCALE: H: 1"=20' V: 1"=5'

DATE	REVISIONS	DRAWN BY

Manhard CONSULTING LTD
800 Woodlands Parkway, Vernon Hills, IL 60061 p:847.834.5500 fx:847.834.0095 manhard.com
Civil Engineers • Surveyors • Water Resource Engineers • Water & Wastewater Engineers
Construction Managers • Environmental Scientists • Landscape Architects • Planners

Exhibit received May 17, 2016

NORTHGATE CROSSING - PHASE 3
WHEELING, COOK COUNTY, ILLINOIS
SANITARY SEWER PROFILE

PROJ. MGR.: JDF
PROJ. ASSOC.: DAM
DRAWN BY: ----
DATE: 05-17-16
SCALE: 1"=20'

SHEET 08 OF 13
KNZWH

© 2015 MANHARD CONSULTING, LTD. ALL RIGHTS RESERVED

PENDING APPROVAL - NOT FOR CONSTRUCTION

May 17, 2016 - 16:28 Dwg Name: P:\Kzwh\dwg\Eng\Final Drawings\Plan Set\08 SANITARY SEWER PROFILE.dwg Updated By: sdolev

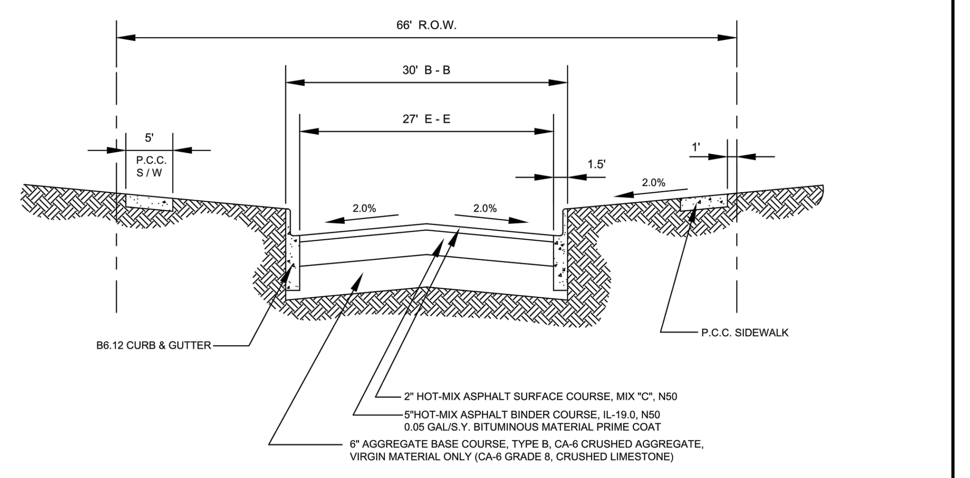

VILLAGE OF WHEELING ILLINOIS	VILLAGE OF WHEELING ENGINEERING DIVISION 2 COMMUNITY BOULEVARD WHEELING, IL 60090 WWW.WHEELINGIL.GOV	TYPICAL LOCAL ROAD PAVEMENT SECTION STANDARD	VILLAGE OF WHEELING SPECIFICATIONS AND DETAILS / FILE LOCATION N:\ENGINEERING\STANDARDS\ ROADWAY	REVISIONS: S.W. 02-07-06 AUTOCAD FILE; C.J.C. 11-27-07 AUTOCAD FILE; K.R.G. 04-01-10 AUTOCAD FILE

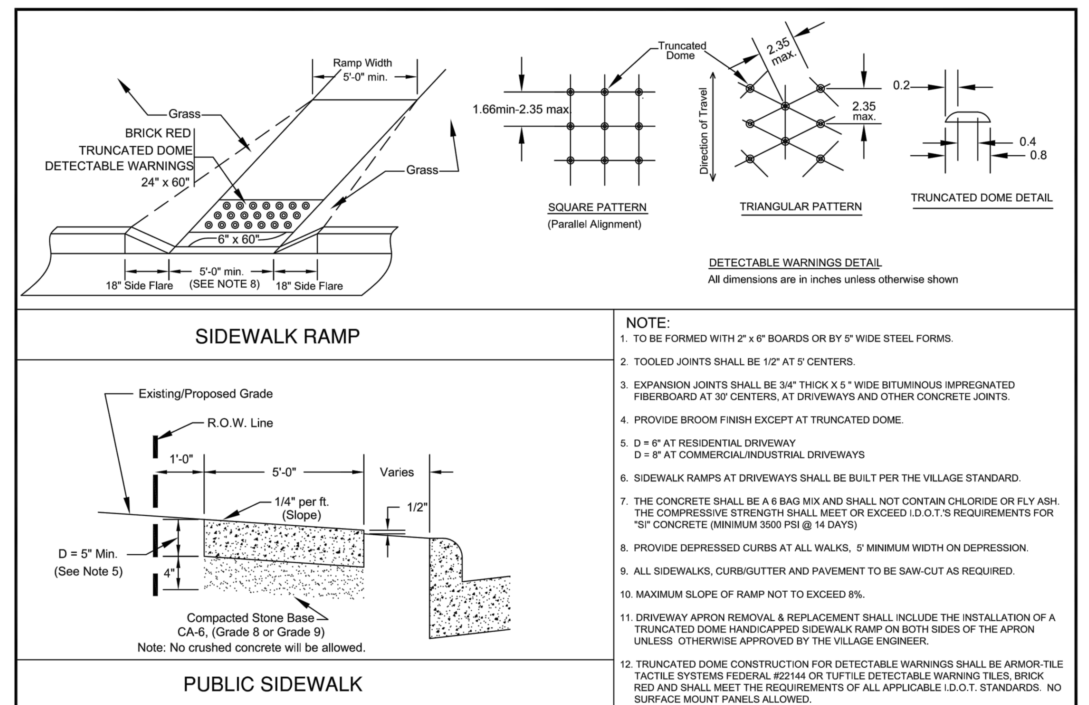

NOTE:
1. TO BE FORMED WITH 2" x 6" BOARDS OR BY 5" WIDE STEEL FORMS.
2. TOOLED JOINTS SHALL BE 1/2" AT 5' CENTERS.
3. EXPANSION JOINTS SHALL BE 3/4" THICK X 5 " WIDE BITUMINOUS IMPREGNATED FIBERBOARD AT 30' CENTERS, AT DRIVEWAYS AND OTHER CONCRETE JOINTS.
4. PROVIDE BROOM FINISH EXCEPT AT TRUNCATED DOME.
5. D = 6" AT RESIDENTIAL DRIVEWAY D = 8" AT COMMERCIAL/INDUSTRIAL DRIVEWAYS
6. SIDEWALK RAMPS AT DRIVEWAYS SHALL BE BUILT PER THE VILLAGE STANDARD.
7. THE CONCRETE SHALL BE A 6 BAG MIX AND SHALL NOT CONTAIN CHLORIDE OR FLY ASH. THE COMPRESSIVE STRENGTH SHALL MEET OR EXCEED I.D.O.T.'S REQUIREMENTS FOR "SI" CONCRETE (MINIMUM 3500 PSI @ 14 DAYS)
8. PROVIDE DEPRESSED CURBS AT ALL WALKS, 5' MINIMUM WIDTH ON DEPRESSION.
9. ALL SIDEWALKS, CURB/GUTTER AND PAVEMENT TO BE SAW-CUT AS REQUIRED.
10. MAXIMUM SLOPE OF RAMP NOT TO EXCEED 8%.
11. DRIVEWAY APRON REMOVAL & REPLACEMENT SHALL INCLUDE THE INSTALLATION OF A TRUNCATED DOME HANDICAPPED SIDEWALK RAMP ON BOTH SIDES OF THE APRON UNLESS OTHERWISE APPROVED BY THE VILLAGE ENGINEER.
12. TRUNCATED DOME CONSTRUCTION FOR DETECTABLE WARNINGS SHALL BE ARMOR-TILE TACTILE SYSTEMS FEDERAL #22144 OR TUFTILE DETECTABLE WARNING TILES, BRICK RED AND SHALL MEET THE REQUIREMENTS OF ALL APPLICABLE I.D.O.T. STANDARDS. NO SURFACE MOUNT PANELS ALLOWED.

VILLAGE OF WHEELING ILLINOIS	VILLAGE OF WHEELING ENGINEERING DIVISION 2 COMMUNITY BOULEVARD WHEELING, IL 60090 WWW.WHEELINGIL.GOV	PUBLIC SIDEWALK STANDARDS	VILLAGE OF WHEELING SPECIFICATIONS AND DETAILS / FILE LOCATION N:\ENGINEERING\STANDARDS\ ROADWAY	REVISIONS: K.R.G. 9-11-06 AS PER T.W.M.; C.J.C. 11-27-07 AUTOCAD FILE; C.J.C. 08-08-08 AS PER K.R.G.; L.R. 04-04-14 AS PER J.T.

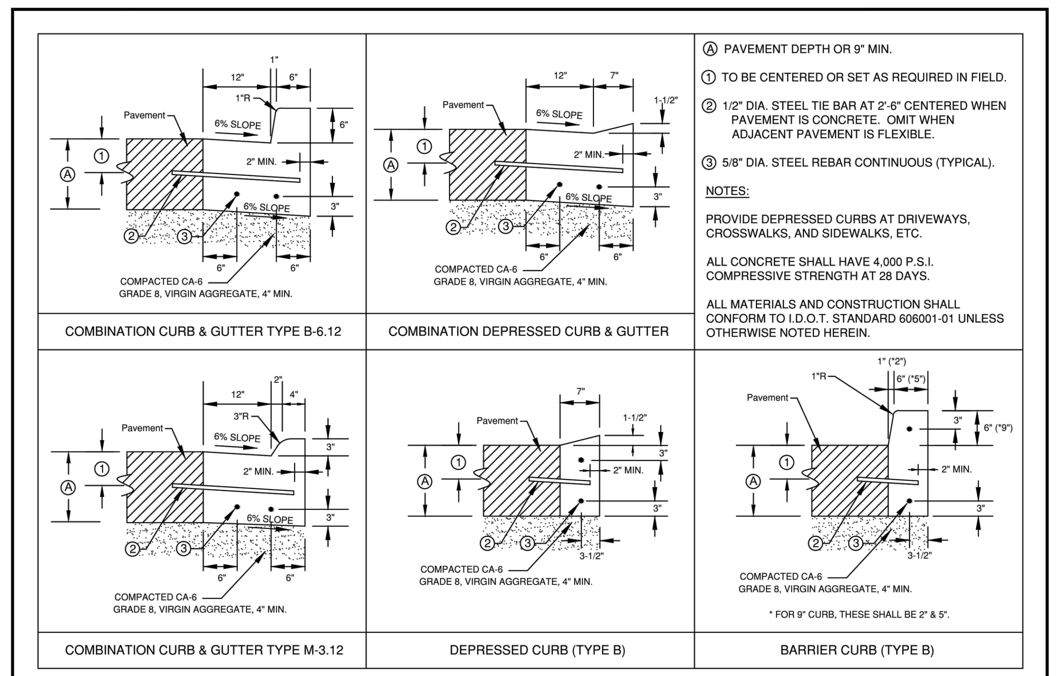

Ⓐ PAVEMENT DEPTH OR 9" MIN.
① TO BE CENTERED OR SET AS REQUIRED IN FIELD.
② 1/2" DIA. STEEL TIE BAR AT 2'-6" CENTERED WHEN PAVEMENT IS CONCRETE. OMIT WHEN ADJACENT PAVEMENT IS FLEXIBLE.
③ 5/8" DIA. STEEL REBAR CONTINUOUS (TYPICAL).

NOTES:
PROVIDE DEPRESSED CURBS AT DRIVEWAYS, CROSSWALKS, AND SIDEWALKS, ETC.
ALL CONCRETE SHALL HAVE 4,000 P.S.I. COMPRESSIVE STRENGTH AT 28 DAYS.
ALL MATERIALS AND CONSTRUCTION SHALL CONFORM TO I.D.O.T. STANDARD 606001-01 UNLESS OTHERWISE NOTED HEREIN.

VILLAGE OF WHEELING ILLINOIS	VILLAGE OF WHEELING ENGINEERING DIVISION 2 COMMUNITY BOULEVARD WHEELING, IL 60090 WWW.WHEELINGIL.GOV	CURB AND GUTTER STANDARD	VILLAGE OF WHEELING SPECIFICATIONS AND DETAILS / FILE LOCATION N:\ENGINEERING\STANDARDS\ ROADWAY	REVISIONS: S.W. 06-16-00 AUTOCAD FILE; C.J.C. 11-27-07 AUTOCAD FILE

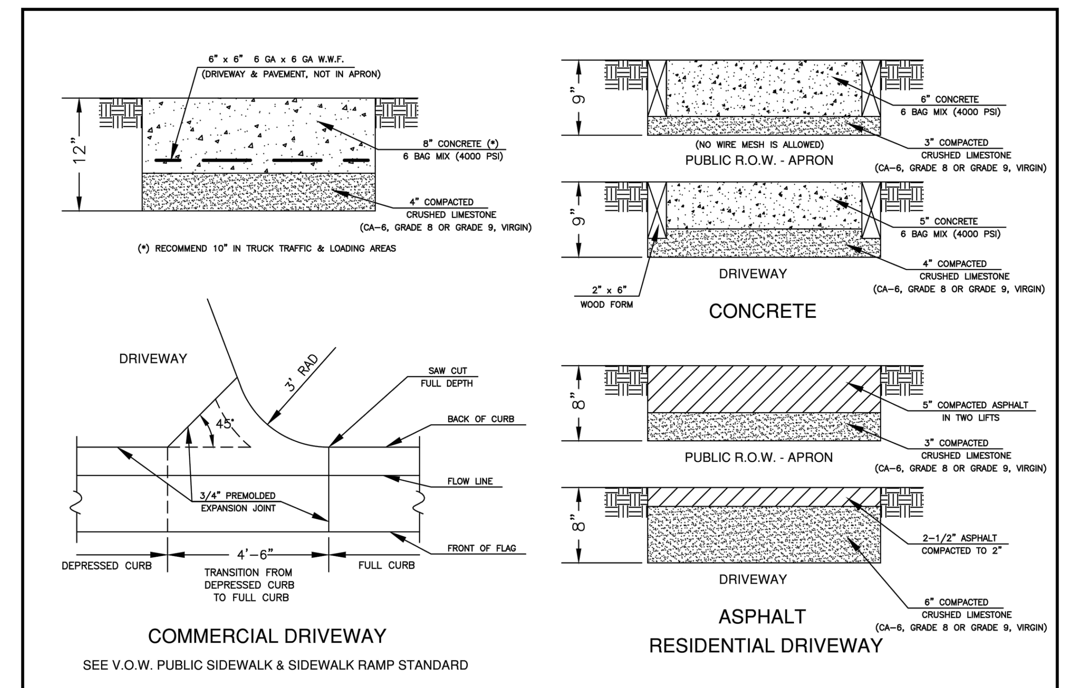

VILLAGE OF WHEELING ILLINOIS	VILLAGE OF WHEELING ENGINEERING DIVISION 2 COMMUNITY BOULEVARD WHEELING, IL 60090 WWW.WHEELINGIL.GOV	DRIVEWAY STANDARD	VILLAGE OF WHEELING SPECIFICATIONS AND DETAILS / FILE LOCATION N:\ENGINEERING\STANDARDS\ ROADWAY	REVISIONS: S.W. 02-09-06 REVISED PER RG; C.J.C. 11-27-07 AUTOCAD FILE; K.R.G. 12-17-08 APRON AGG. THICK; K.R.G. 03-29-10 REVISED GRADE 9

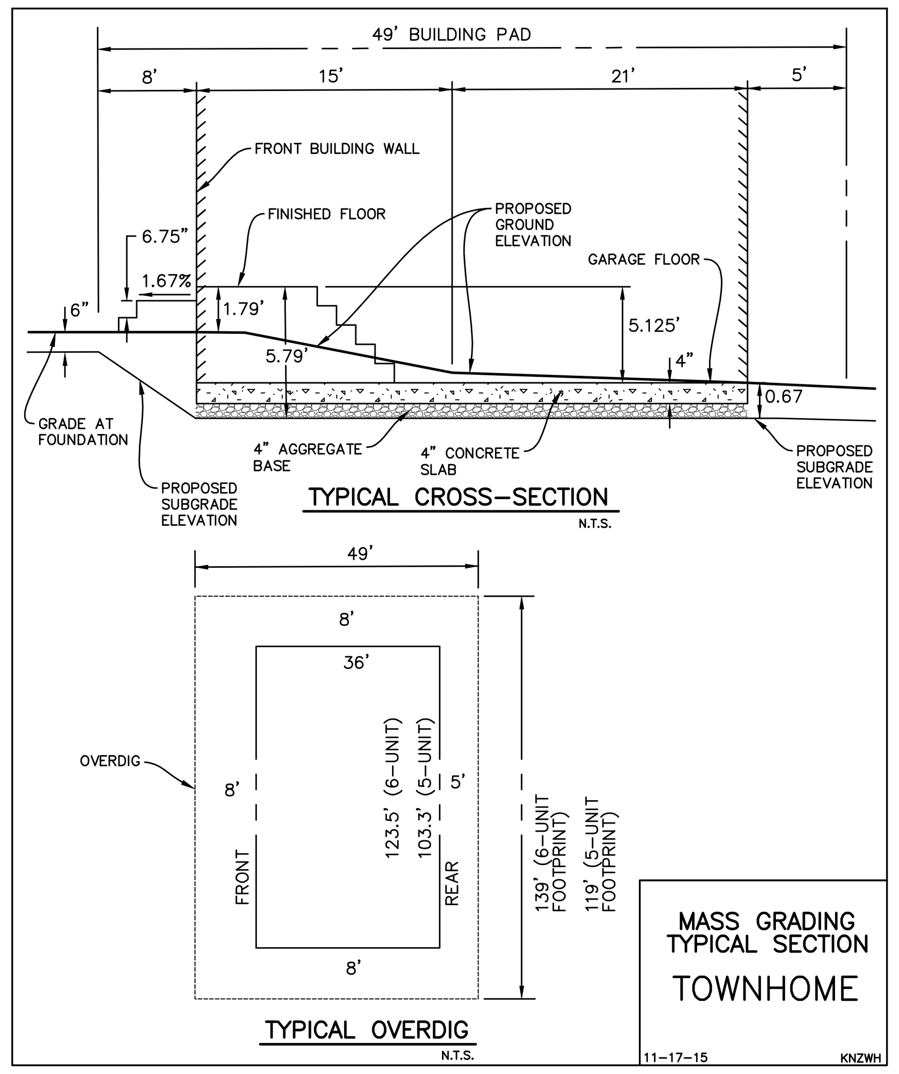

MASS GRADING TYPICAL SECTION

TOWNHOME

11-17-15 KNZWH

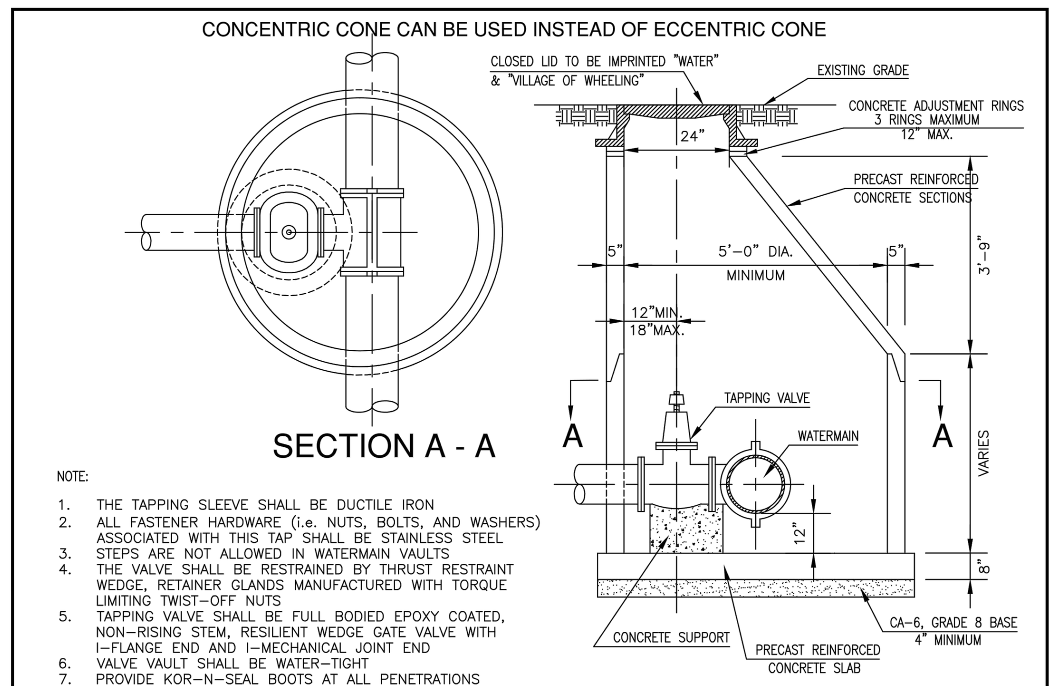

NOTE:
1. THE TAPPING SLEEVE SHALL BE DUCTILE IRON
2. ALL FASTENER HARDWARE (i.e. NUTS, BOLTS, AND WASHERS) ASSOCIATED WITH THIS TAP SHALL BE STAINLESS STEEL
3. STEPS ARE NOT ALLOWED IN WATERMAIN VAULTS
4. THE VALVE SHALL BE RESTRAINED BY THRUST RESTRAINT WEDGE, RETAINER GLANDS MANUFACTURED WITH TORQUE LIMITING TWIST-OFF NUTS
5. TAPPING VALVE SHALL BE FULL BODIED EPOXY COATED, NON-RISING STEM, RESILIENT WEDGE GATE VALVE WITH I-FLANGE END AND I-MECHANICAL JOINT END
6. VALVE VAULT SHALL BE WATER-TIGHT
7. PROVIDE KOR-N-SEAL BOOTS AT ALL PENETRATIONS

VILLAGE OF WHEELING ILLINOIS	VILLAGE OF WHEELING ENGINEERING DIVISION 2 COMMUNITY BOULEVARD WHEELING, IL 60090 WWW.WHEELINGIL.GOV	VALVE & TAPPING VAULT STANDARD	VILLAGE OF WHEELING SPECIFICATIONS AND DETAILS / FILE LOCATION N:\ENGINEERING\STANDARDS\ WATER	REVISIONS: S.W. 4-12-00 AUTOCAD FILE; C.C. 03-07-07 PER COMMENTS; S.W. 08-15-08 CONCENTRIC CONE

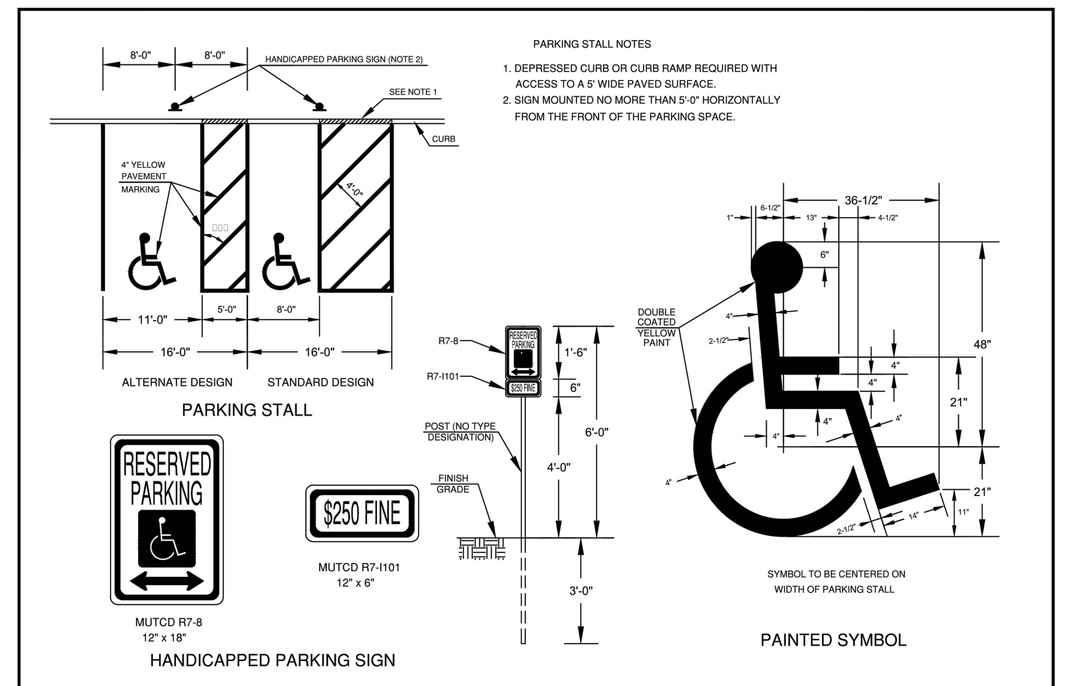

PARKING STALL NOTES
1. DEPRESSED CURB OR CURB RAMP REQUIRED WITH ACCESS TO A 5' WIDE PAVED SURFACE.
2. SIGN MOUNTED NO MORE THAN 5'-0" HORIZONTALLY FROM THE FRONT OF THE PARKING SPACE.

VILLAGE OF WHEELING ILLINOIS	VILLAGE OF WHEELING ENGINEERING DIVISION 2 COMMUNITY BOULEVARD WHEELING, IL 60090 WWW.WHEELINGIL.GOV	HANDICAPPED PARKING STANDARD	VILLAGE OF WHEELING SPECIFICATIONS AND DETAILS / FILE LOCATION N:\ENGINEERING\STANDARDS\ ROADWAY	REVISIONS: S.W. 3-10-00 AUTOCAD FILE; S.W. 5-23-06 AS PER COMMENTS; C.J.C. 11-27-07 AUTOCAD FILE

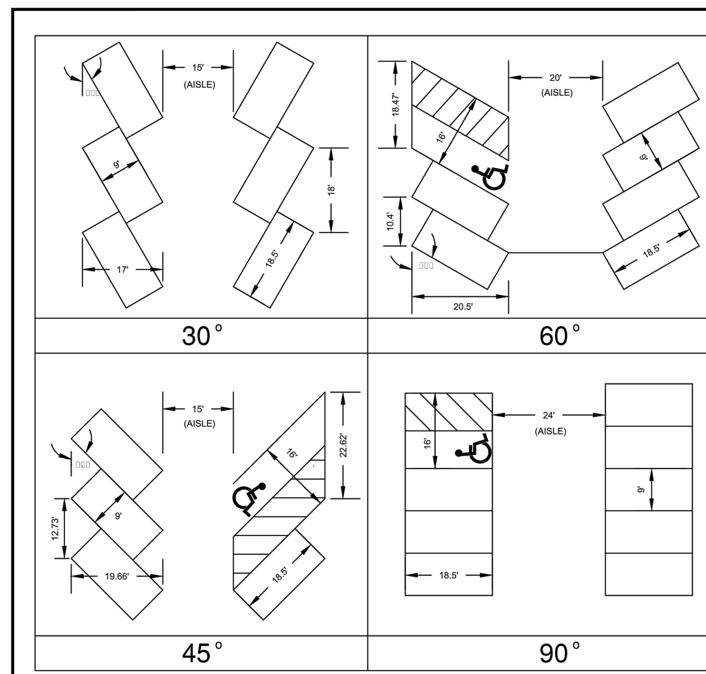

NOTES:
1. NO HANDICAPPED PARKING ALLOWED 30° AND PARALLEL.
2. HANDICAPPED DIMENSIONS - SEE HANDICAPPED PARKING STANDARD.

VILLAGE OF WHEELING ILLINOIS	VILLAGE OF WHEELING ENGINEERING DIVISION 2 COMMUNITY BOULEVARD WHEELING, IL 60090 WWW.WHEELINGIL.GOV	PARKING STALL STANDARDS	VILLAGE OF WHEELING SPECIFICATIONS AND DETAILS / FILE LOCATION N:\ENGINEERING\STANDARDS\ ROADWAY	REVISIONS: S.W. 06-01-00 AUTOCAD FILE; C.J.C. 11-27-07 AUTOCAD FILE

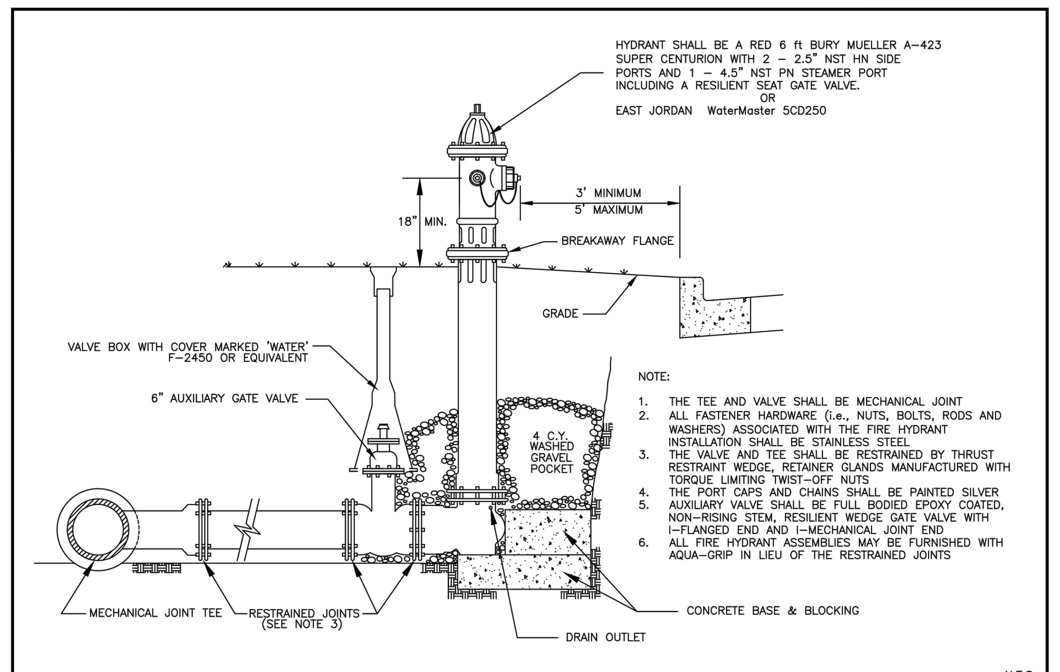

NOTE:
1. THE TEE AND VALVE SHALL BE MECHANICAL JOINT
2. ALL FASTENER HARDWARE (i.e., NUTS, BOLTS, RODS AND WASHERS) ASSOCIATED WITH THE FIRE HYDRANT INSTALLATION SHALL BE STAINLESS STEEL
3. THE VALVE AND TEE SHALL BE RESTRAINED BY THRUST RESTRAINT WEDGE, RETAINER GLANDS MANUFACTURED WITH TORQUE LIMITING TWIST-OFF NUTS
4. THE PORT CAPS AND CHAINS SHALL BE PAINTED SILVER
5. AUXILIARY VALVE SHALL BE FULL BODIED EPOXY COATED, NON-RISING STEM, RESILIENT WEDGE GATE VALVE WITH I-FLANGED END AND I-MECHANICAL JOINT END
6. ALL FIRE HYDRANT ASSEMBLIES MAY BE FURNISHED WITH AQUA-GRIP IN LIEU OF THE RESTRAINED JOINTS

N.T.S.

VILLAGE OF WHEELING ILLINOIS	VILLAGE OF WHEELING ENGINEERING DIVISION 2 COMMUNITY BOULEVARD WHEELING, IL 60090 WWW.WHEELINGIL.GOV	FIRE HYDRANT INSTALLATION STANDARD	VILLAGE OF WHEELING SPECIFICATIONS AND DETAILS / FILE LOCATION N:\ENGINEERING\STANDARDS\ WATER	REVISIONS: P.F. 11-24-98 ADD NOTES; S.W. 01-24-07 PER COMMENTS; C.C. 03-07-07 PER COMMENTS; S.W. 08-15-08 EJIW WaterMaster.

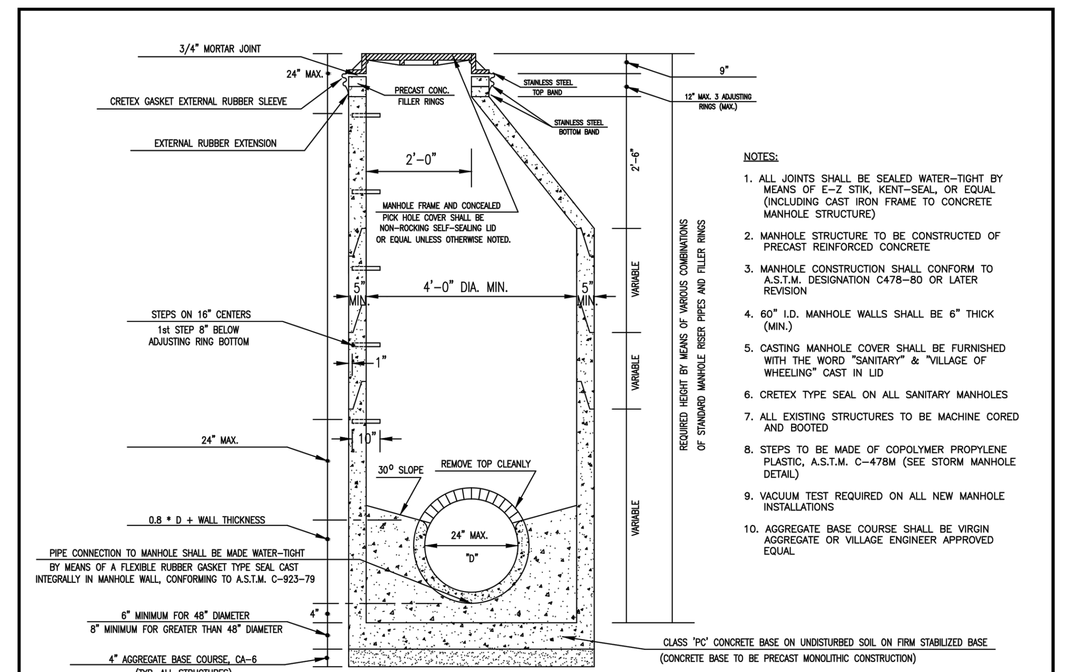

NOTES:
1. ALL JOINTS SHALL BE SEALED WATER-TIGHT BY MEANS OF E-Z STIK, KENT-SEAL, OR EQUAL (INCLUDING CAST IRON FRAME TO CONCRETE MANHOLE STRUCTURE)
2. MANHOLE STRUCTURE TO BE CONSTRUCTED OF PRECAST REINFORCED CONCRETE
3. MANHOLE CONSTRUCTION SHALL CONFORM TO A.S.T.M. DESIGNATION C478-80 OR LATER REVISION
4. 60" I.D. MANHOLE WALLS SHALL BE 6" THICK (MIN.)
5. CASTING MANHOLE COVER SHALL BE FURNISHED WITH THE WORD "SANITARY" & "VILLAGE OF WHEELING" CAST IN LID
6. CRETEX TYPE SEAL ON ALL SANITARY MANHOLES
7. ALL EXISTING STRUCTURES TO BE MACHINE CORED AND BOOTED
8. STEPS TO BE MADE OF COPOLYMER PROPYLENE PLASTIC, A.S.T.M. C-478M (SEE STORM MANHOLE DETAIL)
9. VACUUM TEST REQUIRED ON ALL NEW MANHOLE INSTALLATIONS
10. AGGREGATE BASE COURSE SHALL BE VIRGIN AGGREGATE OR VILLAGE ENGINEER APPROVED EQUAL

VILLAGE OF WHEELING ILLINOIS	VILLAGE OF WHEELING ENGINEERING DIVISION 2 COMMUNITY BOULEVARD WHEELING, IL 60090 WWW.WHEELINGIL.GOV	SANITARY MANHOLE STANDARD	VILLAGE OF WHEELING SPECIFICATIONS AND DETAILS / FILE LOCATION N:\ENGINEERING\STANDARDS\ SANITARY	REVISIONS: S.W. 03-03-00 AUTOCAD FILE; S.W. 02-27-03 AS PER COMMENTS; P.F. 06-16-06 AS PER COMMENTS; C.J.C. 11-27-07 AUTOCAD FILE

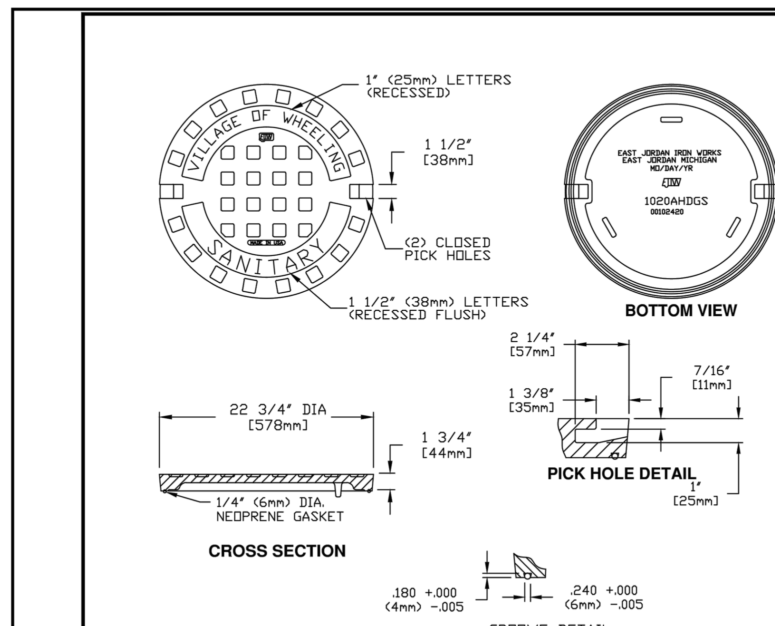

(*) OR NEENAH CATALOG R-1713 SHOP DRAWING NF-1015 T47

(*) EAST JORDAN IRON WORKS, INC. P.O. BOX 439 EAST JORDAN, MI. 49727 1-800-874-4100 FAX 231-536-4458	
DRAWN SMH	DATE 11/11/02
APPROVED	DATE
SPECIAL LETTERED COVER	
(*) PRODUCT NO. 00102420	
CATALOG NO. (*) 1020AGS	
REF. PRODUCT DRAWING 00102108	
EST. WT. COVER WT: 115 LBS. (52 kg)	
OPEN AREA N/A	
MAT'L SPEC. COVER - GRAY IRON ASTM A48 CL 35	
LOAD RATING HEAVY DUTY	

VILLAGE OF WHEELING ILLINOIS	VILLAGE OF WHEELING ENGINEERING DIVISION 2 COMMUNITY BOULEVARD WHEELING, IL 60090 WWW.WHEELINGIL.GOV	FRAME AND CLOSED LID SANITARY STANDARD	VILLAGE OF WHEELING SPECIFICATIONS AND DETAILS / FILE LOCATION N:\ENGINEERING\STANDARDS\ SANITARY	REVISIONS: S.W. 2-24-00 AUTOCAD FILE; S.W. 11-12-02 NPDES PHASE II; S.W. 02-07-03 ADDING NEENAH; C.J.C. 11-27-07 AUTOCAD FILE

ASPHALT
Village of Wheeling Site Inspection List

1) Inspection requirements:
The below items require Village inspection and approval. It is the contractor's responsibility to call the Village and all other appropriate permitting agencies to make an appointment for each required inspection.
- An inspection is required on all subgrades PRIOR to the installation of the granular stone base.
- An inspection of the stone base is required to check compaction and drainage of the base PRIOR to placement of asphalt.
- A final inspection of the project is required for return of the restoration bond.
- Proof rolls or density testing may be required; please check with permit issuing agents prior to the commencement of the project.

All inspections must be scheduled twenty-four (24) hours in advance. Please call (847) 459-2620 (7:00 AM to 5:00 PM Monday-Friday) to schedule inspections or re-inspections with Community Development.

2) Site condition requirements:
- The air temperature in the shade must be at least 45° F and rising when placing asphalt surface course. The temperature of the asphalt must be between 250° and 350°F when it is being placed.
- It is the contractor's responsibility to maintain the public right-of-way (including roadways) free and clear of dirt, dust and debris of any type during construction. If dirt or debris is placed or found upon the street by excavation, asphalt trucks or construction of any type, the contractor may be ticketed or fined.

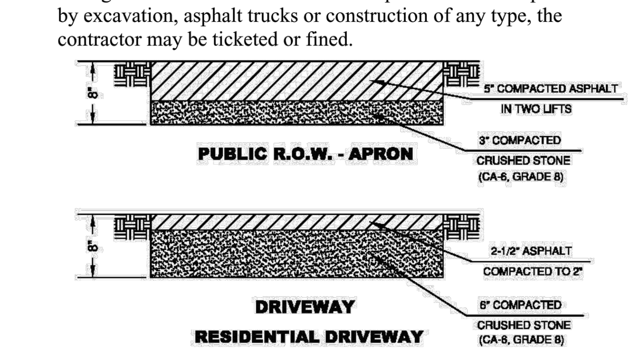

NYLOPLAST DRAIN BASIN WITH DOME GRATE

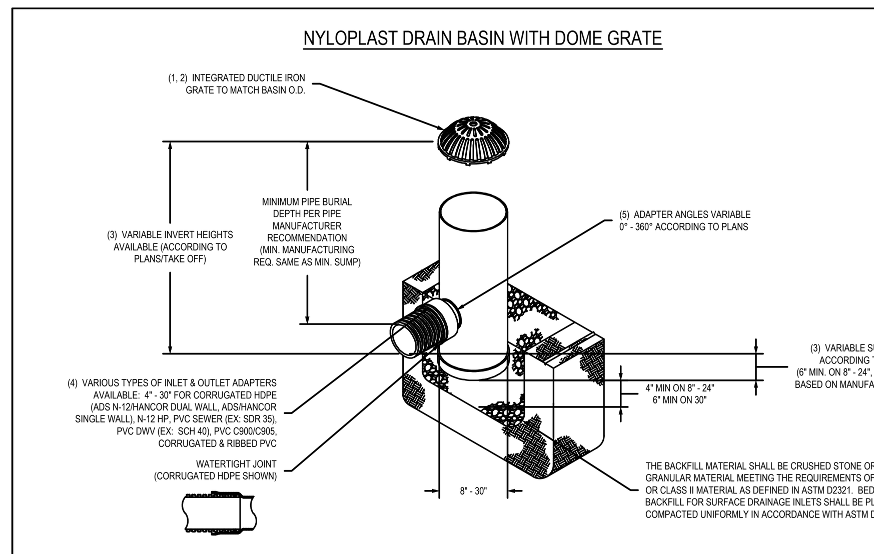

1 - 8" - 30" DOME GRATES SHALL BE DUCTILE IRON PER ASTM A536 GRADE 70-50-05.
2 - 8" & 10" DOME GRATES FIT ONTO THE DRAIN BASINS WITH THE USE OF A PVC BODY TOP. SEE DRAWING NO. 7001-110-045.
3 - DRAIN BASIN TO BE CUSTOM MANUFACTURED ACCORDING TO PLAN DETAILS. RISERS ARE NEEDED FOR BASINS OVER 84" DUE TO SHIPPING RESTRICTIONS. SEE DRAWING NO. 7001-110-065.
4 - DRAINAGE CONNECTION STUB JOINT TIGHTNESS SHALL CONFORM TO ASTM D3212 FOR CORRUGATED HDPE (ADS N-12/HANCOR DUAL WALL), N-12 HP, & PVC SEWER (4" - 24").
5 - ADAPTERS CAN BE MOUNTED ON ANY ANGLE 0° TO 360°. TO DETERMINE MINIMUM ANGLE BETWEEN ADAPTERS SEE DRAWING NO. 7001-110-012.
6 - 8" - 30" DOME GRATES HAVE NO LOAD RATING.

THIS PRINT DISCLOSES SUBJECT MATTER IN WHICH NYLOPLAST HAS PROPRIETARY RIGHTS. THE RECEIPT OR POSSESSION OF THIS PRINT DOES NOT CONFER, TRANSFER, OR LICENSE THE USE OF THE DESIGN OR TECHNICAL INFORMATION SHOWN HEREIN REPRODUCTION OF THIS PRINT OR ANY INFORMATION CONTAINED HEREIN, OR MANUFACTURE OF ANY ARTICLE HEREFROM, FOR THE DISCLOSURE TO OTHERS IS FORBIDDEN, EXCEPT BY SPECIFIC WRITTEN PERMISSION FROM NYLOPLAST. ©2013 NYLOPLAST

DRAWN BY EBC	MATERIAL	Nyloplast 3130 VERONA AVE BUFORD, GA 30518 PHN (770) 932-2443 FAX (770) 932-2490 www.nyloplast-us.com
DATE 03-25-10		
REVISED BY CCA	PROJECT NO./NAME	TITLE DRAIN BASIN WITH DOME GRATE QUICK SPEC INSTALLATION DETAIL
DATE 09-05-13		
DWG SIZE A	SCALE 1:40 SHEET 1 OF 1	DWG NO. 7001-110-397 REV C

SHOULD A CONFLICT ARISE BETWEEN MANHARD DETAILS AND THE VILLAGE DETAILS, THE VILLAGE DETAILS SHALL TAKE PRECEDENCE.

REVISIONS	DATE	DRAWN BY

Manhard CONSULTING LTD
900 Woodlands Parkway, Vernon Hills, IL 60061 ph:847.634.5550 fx:847.634.0095 manhard.com
Civil Engineers • Surveyors • Water Resource Engineers • Water & Wastewater Engineers
Construction Managers • Environmental Scientists • Landscape Architects • Planners

NORTHGATE CROSSING - PHASE 3
WHEELING, COOK COUNTY, ILLINOIS
CONSTRUCTION DETAILS

Exhibit received May 17, 2016

PROJ. MGR.: JDF
PROJ. ASSOC.: DAM
DRAWN BY: DAM
DATE: 05-17-16
SCALE: N.T.S.

SHEET 09 OF 13

KNZWH

© 2015 MANHARD CONSULTING, LTD. ALL RIGHTS RESERVED

PENDING APPROVAL - NOT FOR CONSTRUCTION

May 17, 2016 - 16:15 Dwg Name: P:\Knzwh\dwg\Eng\Final Drawings\Plan Set\09 CONSTRUCTION DETAILS.dwg Updated By: skolev

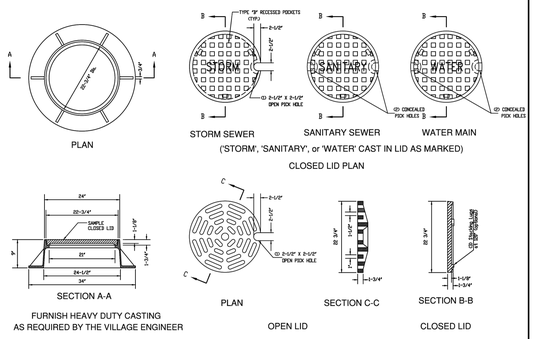

VILLAGE OF WHEELING ILLINOIS | VILLAGE OF WHEELING ENGINEERING DIVISION 2 COMMUNITY BOULEVARD WHEELING, IL 60090 WWW.WHEELINGIL.GOV

FRAME AND LID STANDARD

VILLAGE OF WHEELING SPECIFICATIONS AND DETAILS	REVISIONS	
	S.W.	3-24-09 AUTOCAD FILE
FILE LOCATION	S.W.	9-19-01 PER COMMENTS
N:\ENGINEERING\STANDARDS\ GENERAL	K.R.G.	8-11-06 AUTOCAD FILE

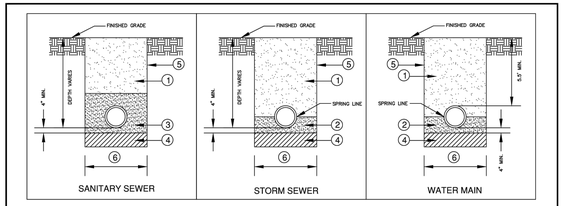

NOTES:

1. BACKFILL & COMPACT GRANULAR TRENCH BACKFILL (CA-6, GRADE B OR APPROVED EQUAL) UNDER STREET PAVEMENT, DRIVEWAYS, AND SIDEWALK. EXCAVATED MATERIAL MAY BE USED IN NON-PAVED AREAS
2. CA-11 OR CA-13 STONE OR OTHER APPROVED SELECT BACKFILL. TAMPED INTO PLACE TO SPRING LINE OF PIPE.
3. CA-11 OR CA-13 STONE OR OTHER APPROVED SELECT BACKFILL. TAMPED TO 12" MINIMUM ABOVE TOP OF PIPE.
4. IF ENCOUNTERED, REMOVE UNSUITABLE MATERIALS AND REPLACE WITH 4" STONE AS DIRECTED BY THE TESTING AGENCY OR THE VILLAGE ENGINEER
5. TRENCH SIDES TO BE SLOPED OR SHEETED/SHORED IN ACCORDANCE WITH OSHA REQUIREMENTS.
6. MAXIMUM TRENCH WIDTH = 18" (1'-6") + O.D. WHEN TRENCH < 5 FEET
   = 36" (2'-0") + O.D. WHEN TRENCH > 5 FEET

VILLAGE OF WHEELING ILLINOIS | VILLAGE OF WHEELING ENGINEERING DIVISION 2 COMMUNITY BOULEVARD WHEELING, IL 60090 WWW.WHEELINGIL.GOV

TRENCH BACKFILL STANDARD

VILLAGE OF WHEELING SPECIFICATIONS AND DETAILS	REVISIONS	
	S.W.	6-11-00 AUTOCAD FILE
FILE LOCATION	S.W.	9-19-01 PER COMMENTS
N:\ENGINEERING\STANDARDS\ GENERAL	S.W.	11-19-04 NO POLY WRAP
	C.J.C.	01-25-08 AUTOCAD FILE

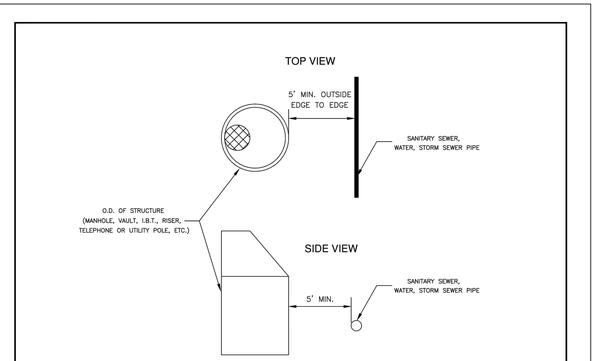

VILLAGE OF WHEELING ILLINOIS | VILLAGE OF WHEELING ENGINEERING DIVISION 2 COMMUNITY BOULEVARD WHEELING, IL 60090 WWW.WHEELINGIL.GOV

UTILITY CLEARANCE STANDARD

VILLAGE OF WHEELING SPECIFICATIONS AND DETAILS	REVISIONS	
	S.W.	2-8-06 AUTOCAD FILE
FILE LOCATION	K.R.G.	8-11-06 AUTOCAD FILE
N:\ENGINEERING\STANDARDS\ GENERAL		

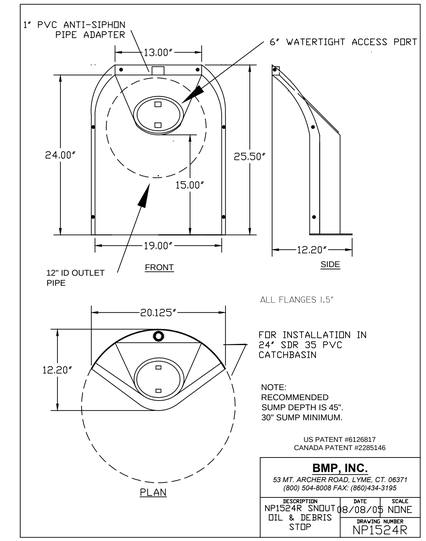

BMP, INC.
53 MT. ARCHER ROAD, LYME, CT. 06371
(800) 504-8008 FAX: (860)434-3195

DESCRIPTION	DATE	SCALE
NP1524R SNOUT OIL & DEBRIS STOP	08/08/05	NONE
	DRAWING NUMBER NP1524R	

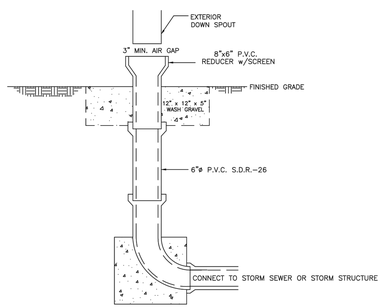

VILLAGE OF WHEELING ILLINOIS | VILLAGE OF WHEELING ENGINEERING DIVISION 2 COMMUNITY BOULEVARD WHEELING, IL 60090 WWW.WHEELINGIL.GOV

DOWNSPOUT CONNECTION STANDARD

VILLAGE OF WHEELING SPECIFICATIONS AND DETAILS	REVISIONS	
	S.W.	5-17-00 AUTOCAD FILE
FILE LOCATION	S.W.	11-07-02 PER COMMENTS
N:\ENGINEERING\STANDARDS\ STORM	K.R.G.	8-11-06 AUTOCAD FILE

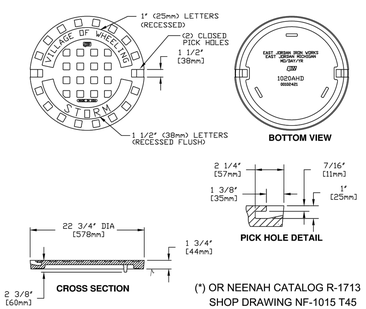

(*) OR NEENAH CATALOG R-1713
SHOP DRAWING NF-1015 T45

√ MACHINED SURFACE

(*) EAST JORDAN IRON WORKS, INC. P.O. BOX 439 EAST JORDAN, MI. 49727 1-800-874-4100 FAX 231-536-4458	
DRAWN SMH	DATE 11/11/02
APPROVED	DATE
SPECIAL LETTERED COVER	
(*) PRODUCT NO. 00102421	
(*) CATALOG NO. 1020A	
REF. PRODUCT DRAWING 102067	
EST. WT. COVER WT: 115 LBS. (52 kg)	
OPEN AREA N/A	
MAT'L SPEC. COVER - GRAY IRON ASTM A48 CL. 35	
LOAD RATING HEAVY DUTY	

VILLAGE OF WHEELING ILLINOIS | VILLAGE OF WHEELING ENGINEERING DIVISION 2 COMMUNITY BOULEVARD WHEELING, IL 60090 WWW.WHEELINGIL.GOV

FRAME AND CLOSE LID STORM MANHOLE STANDARD

VILLAGE OF WHEELING SPECIFICATIONS AND DETAILS	REVISIONS	
	S.W.	2-24-00 AUTOCAD FILE
	S.W.	9-19-01 PER COMMENTS
FILE LOCATION	S.W.	11-12-02 NPDES PHASE 2
N:\ENGINEERING\STANDARDS\ STORM	S.W.	02-07-03 ADDING NEENAH
	C.J.C.	01-25-08 AUTOCAD FILE

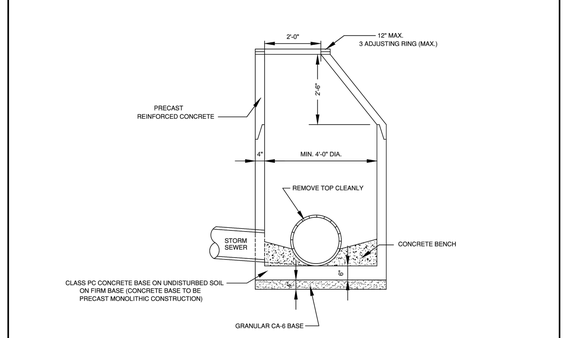

VILLAGE OF WHEELING ILLINOIS | VILLAGE OF WHEELING ENGINEERING DIVISION 2 COMMUNITY BOULEVARD WHEELING, IL 60090 WWW.WHEELINGIL.GOV

STORM MANHOLE STANDARD

VILLAGE OF WHEELING SPECIFICATIONS AND DETAILS	REVISIONS	
	S.W.	6-16-00 AUTOCAD FILE
FILE LOCATION	S.W.	9-21-01 PER COMMENTS
N:\ENGINEERING\STANDARDS\ STORM	S.W.	2-27-03 PER COMMENTS
	K.R.G.	8-11-06 AUTOCAD FILE

MATERIAL STANDARDS

ITEM	BRAND	PRODUCT
FIRE HYDRANTS (TRAFFIC MODEL)	MUELLER SUPER CENTURION WATEROUS PACER	A-423 WB-67
GATE VALVES SPECIFY SIZE NON-RISING STEM, 2" NUT, M.J., OPEN LEFT	MUELLER (SIZE) AMERICAN FLOW CONTROL	A-2360-20L SERIES 2500
VALVE BOXES 3 PIECE	EAST JORDAN TYLER/UNION	SCREW ADJUSTING EXTENSION TYPE
CURB STOPS (SPECIFY SIZE)	MUELLER FORD	300 BALL VALVE BALL VALVE
CORPORATION VALVE (SPECIFY SIZE)	MUELLER FORD	H-15000 FB600 (AWWA/CC THREAD)
MANHOLES/CATCHBASINS/INLETS IN OPEN AREAS AND PAVEMENT (SELF-SEALING LID WITH PROPER UTILITY MARKINGS)	NEENAH	
	CLOSED LID	R-1772
	OPEN LID *1 SWALES AND DITCHES	R-2502 C R-4340 B
MANHOLES/CATCH BASINS/INLETS IN COMBINATION CURB & GUTTER (BICYCLE SAFE)	NEENAH ROLL/MOUNTABLE CURB B6.12 CURB	R-3501-D2A R-3281A *-3281-AL
WATER SERVICE SADDLES (ALL SERVICE SADDLES SHALL BE DOUBLE STRAP; BRONZE, NYLON COATED OR STAINLESS STEEL)	MUELLER FORD SMITH-BLAIR 3/4" & 1"	DR2S FS 303 # 317
B-BOX (AT LEAST 1 1/4" TOP SECTION) ARCH PATTERN PLUG STYLE LID	FORD MUELLER	EA2 CURB BOX

*1 WHEREVER STORMWATER COULD POSSIBLY ENTER STORM STRUCTURE

MATERIAL STANDARDS
06-01-15 S-MS-MATRL

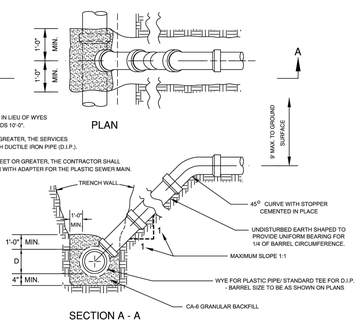

VILLAGE OF WHEELING ILLINOIS | VILLAGE OF WHEELING ENGINEERING DIVISION 2 COMMUNITY BOULEVARD WHEELING, IL 60090 WWW.WHEELINGIL.GOV

SANITARY SERVICE RISER STANDARD

VILLAGE OF WHEELING SPECIFICATIONS AND DETAILS	REVISIONS	
	S.W.	9-8-00 AUTOCAD FILE
FILE LOCATION	C.J.C.	11-21-07 AUTOCAD FILE
N:\ENGINEERING\STANDARDS\ SANITARY		

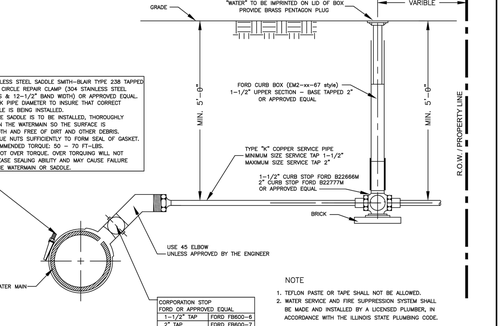

VILLAGE OF WHEELING ILLINOIS | VILLAGE OF WHEELING ENGINEERING DIVISION 2 COMMUNITY BOULEVARD WHEELING, IL 60090 WWW.WHEELINGIL.GOV

TYPICAL SERVICE TAP STANDARD

VILLAGE OF WHEELING SPECIFICATIONS AND DETAILS	REVISIONS	
	S.W.	3-12-99 PER COMMENTS
FILE LOCATION	K.R.G.	8-11-06 AUTOCAD FILE
N:\ENGINEERING\STANDARDS\ WATER	S.W.	9-15-08 ADDED 45 ELBOW

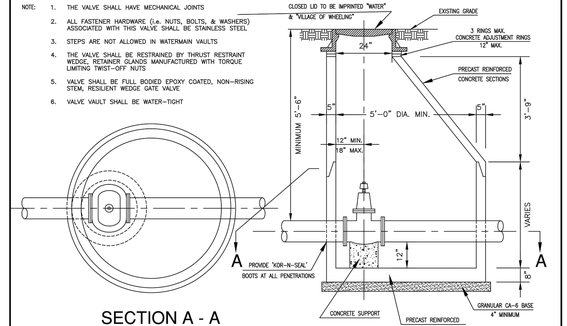

VILLAGE OF WHEELING ILLINOIS | VILLAGE OF WHEELING ENGINEERING DIVISION 2 COMMUNITY BOULEVARD WHEELING, IL 60090 WWW.WHEELINGIL.GOV

5' DIA. VAVLE VAULT STANDARD

VILLAGE OF WHEELING SPECIFICATIONS AND DETAILS	REVISIONS	
	S.W.	9-9-00 AUTOCAD FILE
FILE LOCATION	S.W.	11-07-01 PER COMMENTS
N:\ENGINEERING\STANDARDS\ WATER	C.C.	03-07-07 PER COMMENTS
	K.R.G.	07-18-07 PER COMMENTS

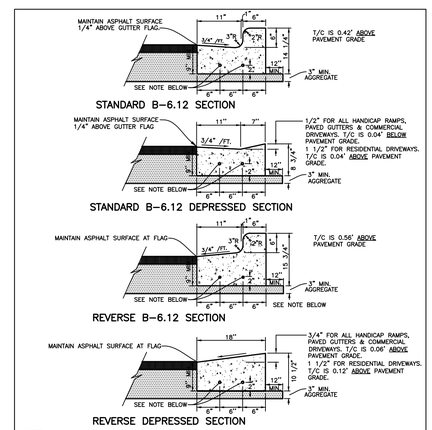

NOTE:
1. EXPANSION JOINTS TO BE LOCATED AT HIGH POINTS, UTILITY STRUCTURES, CURB RETURNS, COLD JOINTS OR 60' MAX. (SEE DETAIL).
2. CONTRACTION JOINTS ARE TO BE SAW CUT 2" DEEP AT 20' INTERVALS MAX.
3. INSTALL 2-#4 DEFORMED BARS X 10'-0" LONG OVER ALL TRENCHES.
4. TRANSITION CURB AND GUTTER AS NECESSARY TO MEET DRAINAGE STRUCTURE FRAME AND GRATE

MODIFIED B-6.12 CURB & GUTTER DETAIL
06-01-15 S-RD-B6C0

SHOULD A CONFLICT ARISE BETWEEN MANHARD DETAILS AND THE VILLAGE DETAILS, THE VILLAGE DETAILS SHALL TAKE PRECEDENCE.

DATE	REVISIONS	DRAWN BY

Manhard CONSULTING LTD
800 Woodlands Parkway, Vernon Hills, IL 60061 ph:847.634.5550 fx:847.634.0095 manhard.com
Civil Engineers • Surveyors • Water Resource Engineers • Water & Wastewater Engineers
Construction Managers • Environmental Scientists • Landscape Architects • Planners

Exhibit received May 17, 2016

NORTHGATE CROSSING - PHASE 3
WHEELING, COOK COUNTY, ILLINOIS
CONSTRUCTION DETAILS

PROJ. MGR.: JDF
PROJ. ASSOC.: DAM
DRAWN BY: DAM
DATE: 05-17-16
SCALE: N.T.S.
SHEET 10 OF 13
KNZWH

© 2016 MANHARD CONSULTING, LTD. ALL RIGHTS RESERVED

PENDING APPROVAL - NOT FOR CONSTRUCTION

May 17, 2016 - 16:15 Dwg Name: P:\Vernon\Ves\Eng\Final Drawings\Plan Set\09 CONSTRUCTION DETAILS.dwg Updated By: skelley

STANDARD SPECIFICATIONS FOR WATER AND SEWER CONSTRUCTION IN ILLINOIS, LATEST EDITION.

41–2.01 PROTECTION OF WATER MAIN AND WATER SERVICE LINES

41–2.01A GENERAL

Water mains and water service lines shall be protected from sanitary sewers, storm sewers, combined sewers, house sewer service connections and drains as follows:

41–2.01B HORIZONTAL SEPARATION – WATER MAINS AND SEWERS

(1.) Water mains shall be located at least ten (10) feet (3.1 m) horizontally from any existing or proposed drain, storm sewer, sanitary sewer, combined sewer or sewer service connection.

(2.) Water mains may be located closer than ten (10) feet (3.1 m) to a sewer line when:

(a) local conditions prevent a lateral separation of ten (10) feet (3.1 m); and

(b) the water main invert is at least eighteen (18) inches (460 mm) above the crown of the sewer; and

(c) the water main is either in a separate trench or in the same trench on an undisturbed earth shelf located to one side of the sewer.

(3.) When it is impossible to meet (1) or (2) above, both the water main and drain or sewer shall be constructed of slip–on or mechanical joint cast or ductile iron pipe, prestressed concrete pipe, or PVC pipe equivalent to water main standards of construction. The drain or sewer shall be pressure tested to the maximum expected surcharge head before backfilling. See Standard Drawing No. 18.

WATER AND SEWER SEPARATION REQUIREMENTS (HORIZONTAL SEPARATION)

06–01–15 S–WM–SEP–1

STANDARD SPECIFICATIONS FOR WATER AND SEWER CONSTRUCTION IN ILLINOIS, LATEST EDITION.

41–2.01C VERTICAL SEPARATION – WATER MAINS AND SEWERS

(1.) A water main shall be separated from a sewer so that its invert is a minimum of eighteen (18) inches (460mm) above the crown of the drain or sewer whenever water mains cross storm sewers, sanitary sewers or sewer service connections. The vertical separation shall be maintained for that portion of the water main located within ten (10) feet (3.1m) horizontally of any sewer or drain crossed. A length of water main pipe shall be centered over the sewer to be crossed with joints equidistant from the sewer or drain.

(2.) Both the water main and sewer shall be constructed of slip–on or mechanical joint cast or ductile iron pipe, prestressed concrete pipe, or PVC pipe equivalent to water main standards of construction when:

(a) it is impossible to obtain the proper vertical separation as described in (1) above; or

(b) the water main passes under a sewer or drain.

NOTES:

(1) CASING OF EITHER THE WATER MAIN OR SEWER PIPE IS ACCEPTABLE IN LIEU OF PLACING THE SEWER IN WATER MAIN EQUIVALENT PIPE.

(2) THE STORM SEWER CAN BE CONSTRUCTED WITH REINFORCED CONCRETE PIPE USING FLEXIBLE GASKETS JOINTS, (ASTM C361 C443) INSTEAD OF CONSTRUCTING THE STORM SEWER WITH WATER MAIN EQUIVALENT PIPE OR CASING PIPE.

(3.) A vertical separation of eighteen (18) inches (460 mm) between the invert of the sewer or drain and the crown of the water main shall be maintained where a water main crosses under a sewer. Support the sewer or drain lines to prevent settling and breaking the main, as shown on the Plans or as approved by the ENGINEER.

(4.) Construction shall extend on each side of the crossing until the perpendicular distance from the water main to the sewer or drain line is at least ten (10) feet (3.1 m) See Standard Drawings No. 19–23.

WATER AND SEWER SEPARATION REQUIREMENTS (VERTICAL SEPARATION)

06–01–15 S–WM–SEP–2

SEWER LINE WITH 18" VERTICAL SEPARATION ABOVE WATER MAIN

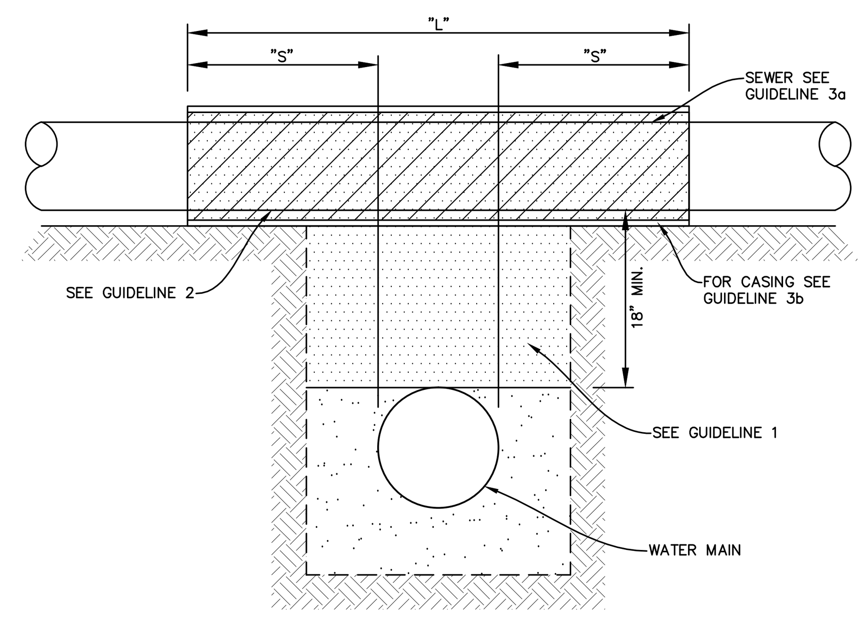

NOTE: "S" = THE LENGTH NECESSARY TO PROVIDE 10 FEET OF SEPARATION AS MEASURED PERPENDICULAR TO THE EXISTING WATER MAIN.

GUIDELINES:

1. IF SELECT GRANULAR BACKFILL EXISTS: REMOVE WITHIN WIDTH OF SEWER TRENCH AND REPLACE WITH SELECT EXCAVATED MATERIAL (CLASS IV) AND COMPACT.
2. OMIT SELECT GRANULAR EMBEDMENT AND GRANULAR BACKFILL TO ONE (1) FOOT OVER TOP OF SEWER AND USE SELECT EXCAVATED MATERIAL (CLASS IV) AND COMPACT THE LENGTH OF "L" FEET.
3. (a) CONSTRUCT "L" FEET OF SEWER OF WATER MAIN MATERIAL AND PRESSURE TEST, OR:

   (b) USE "L" FEET OF WATER MAIN MATERIAL FOR CASING OF SEWER AND SEAL ENDS OF CASING.

WATER AND SEWER SEPARATION REQUIREMENTS (VERTICAL SEPARATION)

06–01–15 S–WM–SEP–3

WATER MAIN BELOW SEWER LINE WITH 18" MINIMUM VERTICAL SEPERATION.

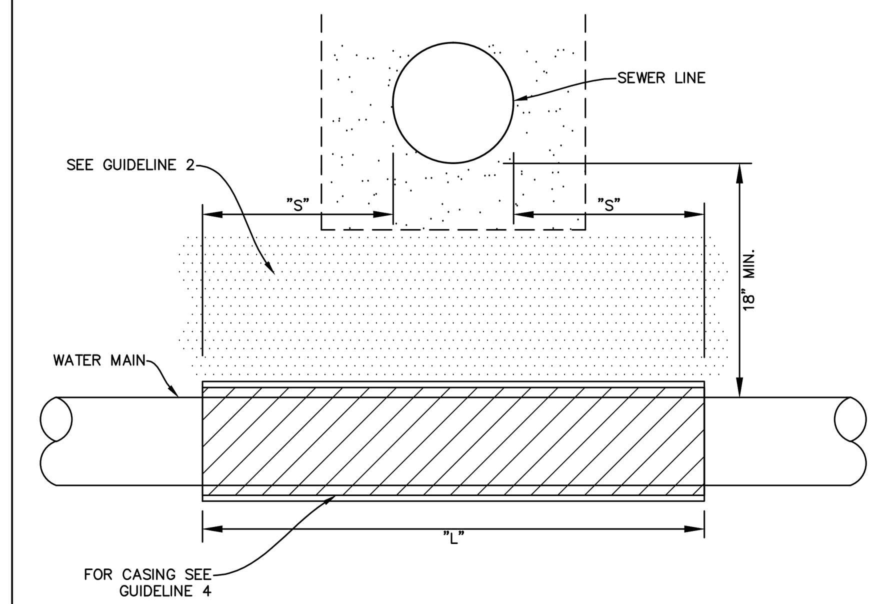

NOTE: "S" = THE LENGTH NECESSARY TO PROVIDE 10 FEET OF SEPARATION AS MEASURED PERPENDICULAR TO THE EXISTING SEWER LINE.

GUIDELINES:

1. OMIT SELECT GRANULAR EMBEDMENT AND GRANULAR BACKFILL TO ONE (1) FOOT OVER TOP OF WATER MAIN AND USE SELECT EXCAVATED MATERIAL (CLASS IV) AND COMPACT THE LENGTH OF "L" FEET.
2. IF SELECT GRANULAR BACKFILL EXISTS, REMOVE WITHIN WIDTH OF SEWER LINE TRENCH AND REPLACE WITH SELECT SELECT EXCAVATED MATERIAL (CLASS IV) AND COMPACT.
3. PROVIDE ADEQUATE SUPPORT FOR SEWER LINE TO PREVENT DAMAGE DUE TO SETTLEMENT.
4. USE "L" FEET OF WATER MAIN MATERIAL FOR CASING OF WATER MAIN AND SEAL ENDS OF CASING.

WATER AND SEWER SEPARATION REQUIREMENTS (VERTICAL SEPARATION)

06–01–15 S–WM–SEP–4

SEWER LINE BELOW WATER MAIN WITH LESS THAN 18" VERTICAL SEPARATION.

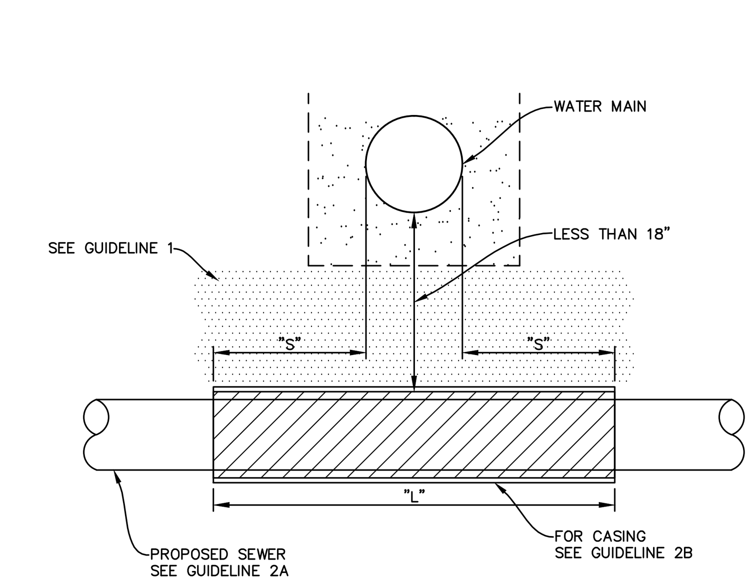

NOTE: "S" = THE LENGTH NECESSARY TO PROVIDE 10 FEET OF SEPARATION AS MEASURED PERPENDICULAR TO THE EXISTING WATER MAIN.

GUIDELINES:

1. OMIT SELECT GRANULAR EMBEDMENT AND GRANULAR BACKFILL TO ONE (1) FOOT OVER TOP OF SEWER AND USE SELECT EXCAVATED MATERIAL (CLASS IV) AND COMPACT FOR "S" FEET ON EACH SIDE OD WATER MAIN.
2. a) CONSTRUCT "L" FEET OF PROPOSED SEWER OF WATER MAIN MATERIAL AND PRESSURE TEST, OR:

   b) USE "L" FEET OF WATER MAIN MATERIAL FOR CASING OF PROPOSED SEWER AND SEAL ENDS OF CASING.
3. PROVIDE ADEQUATE SUPPORT FOR EXCAVATING WATER MAIN TO PREVENT DAMAGE DUE TO SETTLEMENT OF SEWER TRENCH.

WATER AND SEWER SEPARATION REQUIREMENTS (VERTICAL SEPARATION)

06–01–15 S–WM–SEP–5

WATER MAIN ABOVE SEWER LINE WITH LESS THAN 18" VERTICAL SEPARATION.

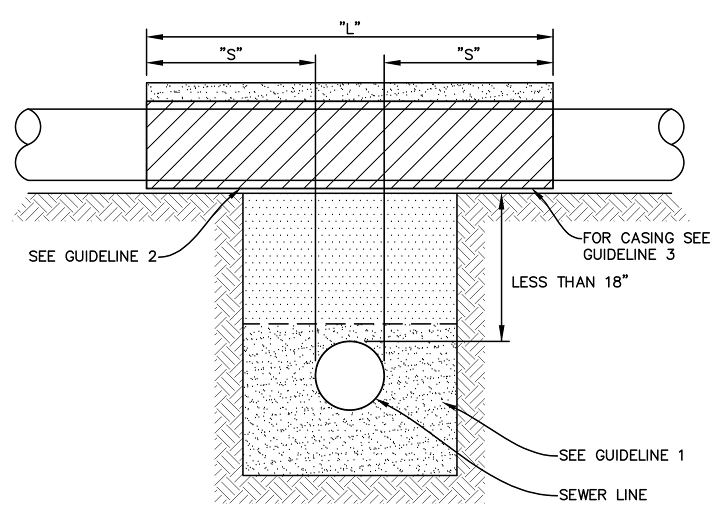

NOTE: "S" = THE LENGTH NECESSARY TO PROVIDE 10 FEET OF SEPARATION AS MEASURED PERPENDICULAR TO THE EXISTING SEWER LINE.

GUIDELINES:

1. OMIT SELECT GRANULAR EMBEDMENT AND GRANULAR BACKFILL TO ONE (1) FOOT OVER TOP OF WATER MAIN AND USE SELECT EXCAVATED MATERIAL (CLASS IV) AND COMPACT THE LENGTH OF "L".
2. IF SELECT GRANULAR BACKFILL EXISTS, REMOVE WITHIN WIDTH OF EXISTING SEWER LINE TRENCH AND REPLACE WITH SELECT EXCAVATED MATERIAL (CLASS IV) AND COMPACT.
3. USE "L" FEET OF WATER MAIN MATERIAL FOR CASING OF PROPOSED WATER MAIN AND SEAL ENDS OF CASING.
4. POINT LOADS SHALL NOT BE ALLOWED BETWEEN WATER MAIN CASING AND SEWER.

WATER AND SEWER SEPARATION REQUIREMENTS (VERTICAL SEPARATION)

06–01–15 S–WM–SEP–6

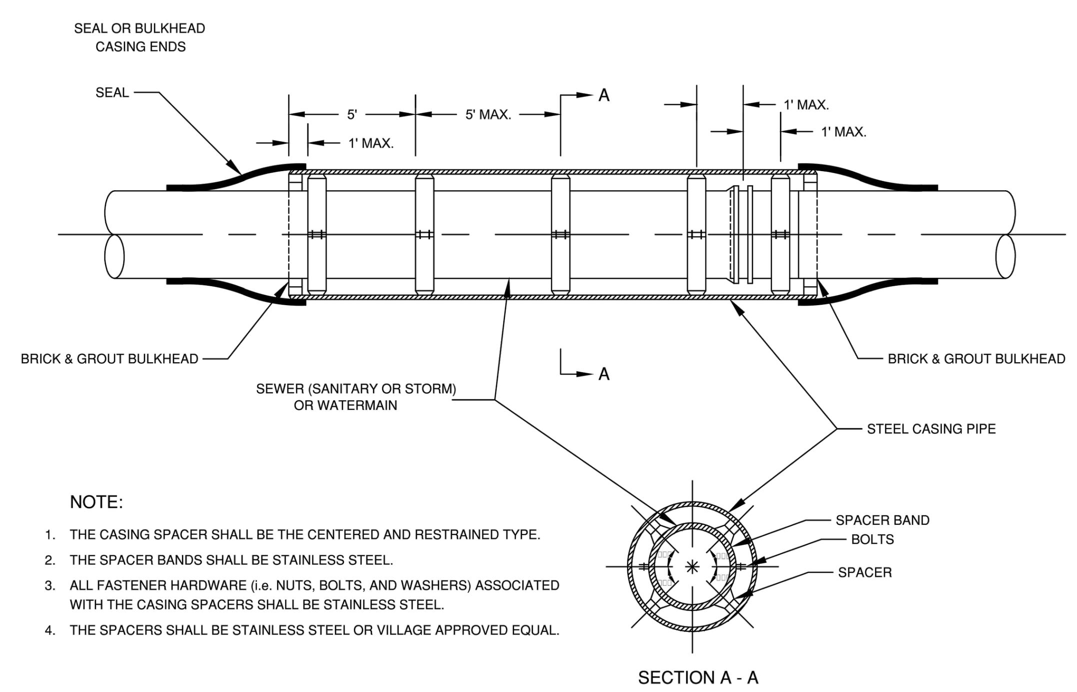

NOTE:

1. THE CASING SPACER SHALL BE THE CENTERED AND RESTRAINED TYPE.
2. THE SPACER BANDS SHALL BE STAINLESS STEEL.
3. ALL FASTENER HARDWARE (i.e. NUTS, BOLTS, AND WASHERS) ASSOCIATED WITH THE CASING SPACERS SHALL BE STAINLESS STEEL.
4. THE SPACERS SHALL BE STAINLESS STEEL OR VILLAGE APPROVED EQUAL.

VILLAGE OF WHEELING ILLINOIS | VILLAGE OF WHEELING ENGINEERING DIVISION 2 COMMUNITY BOULEVARD WHEELING, IL 60090 WWW.WHEELINGIL.GOV

UNDERGROUND UTILITY CASING PIPE STANDARD

VILLAGE OF WHEELING SPECIFICATIONS AND DETAILS | FILE LOCATION N:\ENGINEERING\STANDARDS\ WATER

REVISIONS	
S.W.	4-17-00 AUTOCAD FILE
S.W.	6-11-04 SPACER RQRMNT.
K.R.G.	9-11-06 AUTOCAD FILE

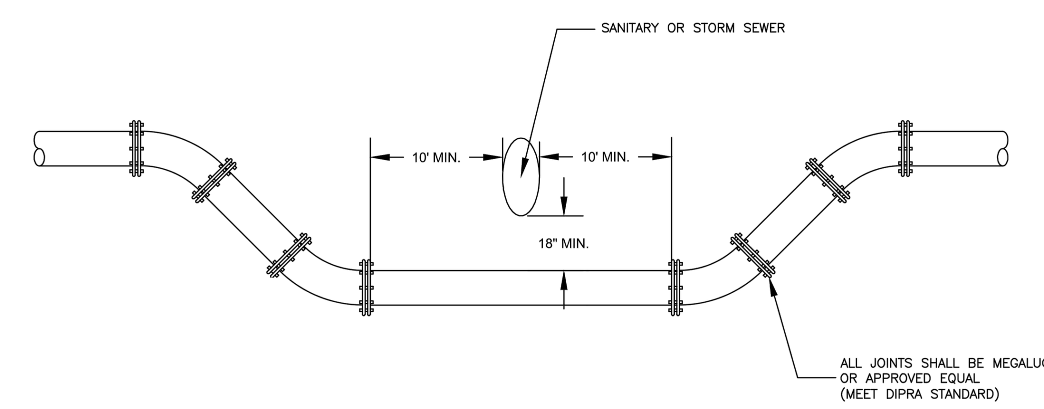

VILLAGE OF WHEELING ILLINOIS | VILLAGE OF WHEELING ENGINEERING DIVISION 2 COMMUNITY BOULEVARD WHEELING, IL 60090 WWW.WHEELINGIL.GOV

WATER MAIN DEPRESSION STANDARD

VILLAGE OF WHEELING SPECIFICATIONS AND DETAILS | FILE LOCATION N:\ENGINEERING\STANDARDS\ WATER

REVISIONS	
S.W.	5-30-00 AUTO-CAD FILE
S.W.	5-11-06 PER COMMENTS
C.J.C.	01-20-08 AUTOCAD FILE

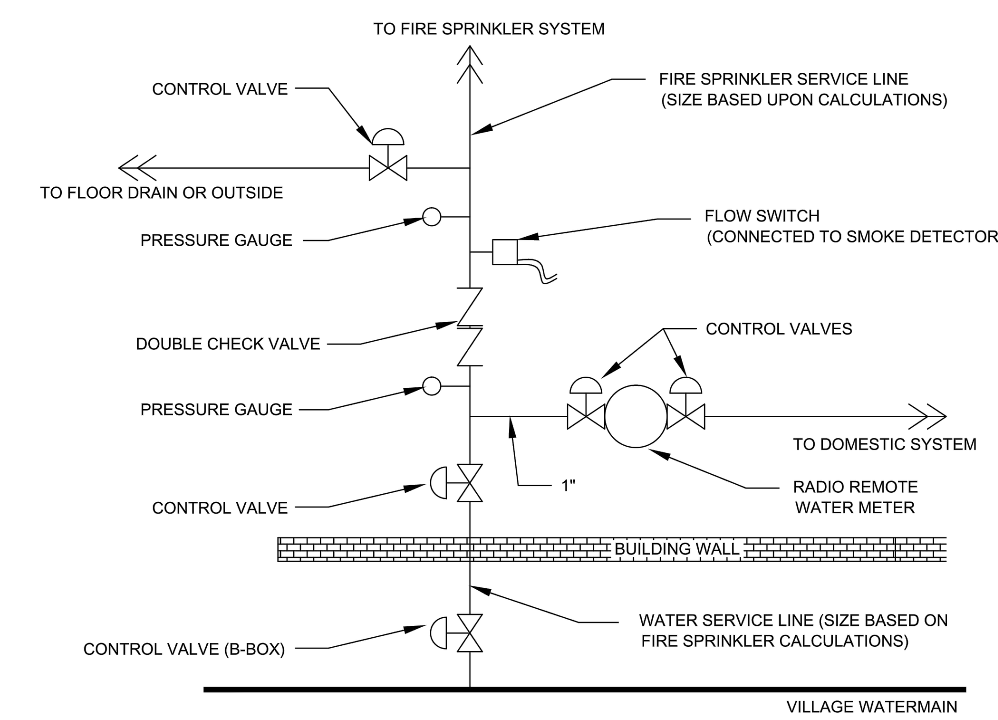

VILLAGE OF WHEELING ILLINOIS | VILLAGE OF WHEELING ENGINEERING DIVISION 2 COMMUNITY BOULEVARD WHEELING, IL 60090 WWW.WHEELINGIL.GOV

WATER SERVICE SYSTEM - TOWNHOME

VILLAGE OF WHEELING SPECIFICATIONS AND DETAILS | FILE LOCATION N:\ENGINEERING\STANDARDS\ WATER

REVISIONS	
S.W.	11-28-01 AUTOCAD FILE
C.J.C.	01-29-08 AUTOCAD FILE

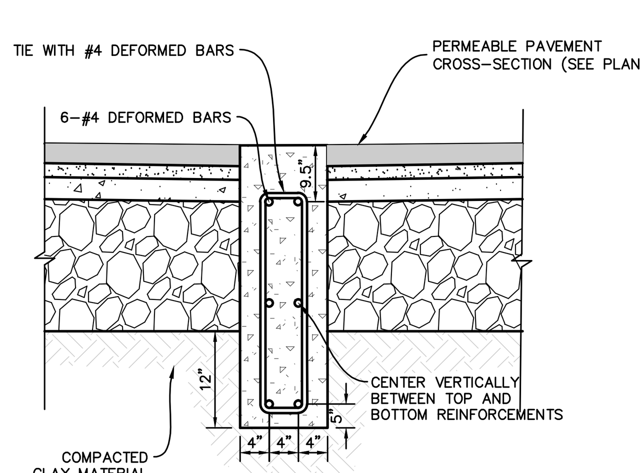

NOTES:

1. CONTRACTION JOINTS ARE TO BE SAW CUT 2" DEEP AT 10' INTERVALS MAX.
2. INSTALL 6–#4 DEFORMED BARS X 10'–0" LONG OVER ALL TRENCHES.
3. HORIZONTAL REINFORCEMENT TO BE TIED WITH #4 DEFORMED BARS SPACED AT 6' LONGITUDINALLY.

CONCRETE RIBBON CURB DETAIL

01–01–10 S–ST–UD

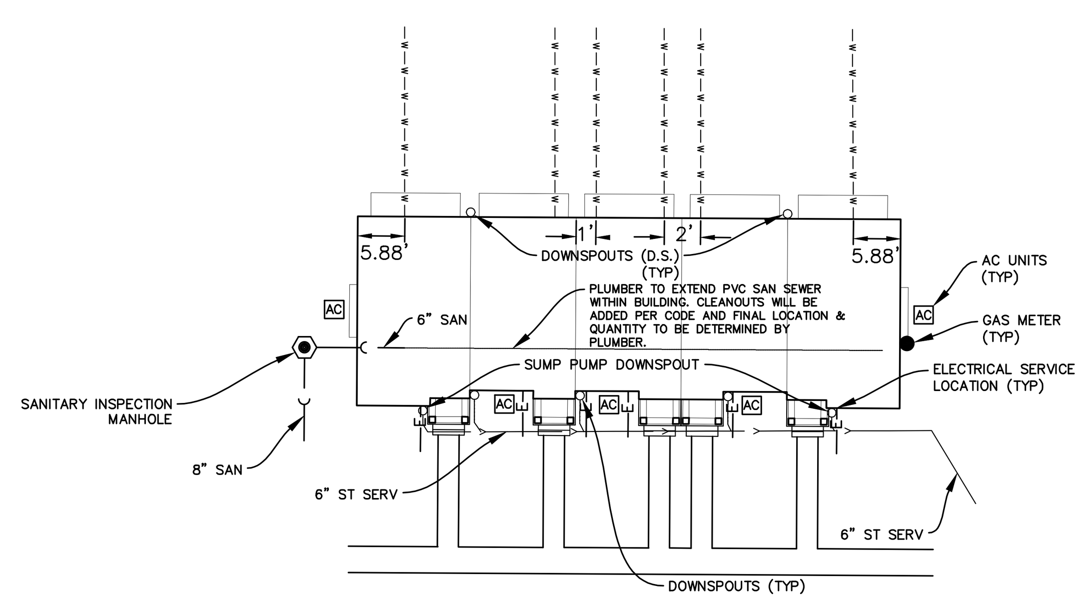

NOTE:

1. INDIVIDUAL UNIT WATER SERVICE SIZES TO BE DETERMINED BY PLUMBER

TOWNHOME TYPICAL BUILDING SERVICE DETAIL

04–12–16 KNZWH

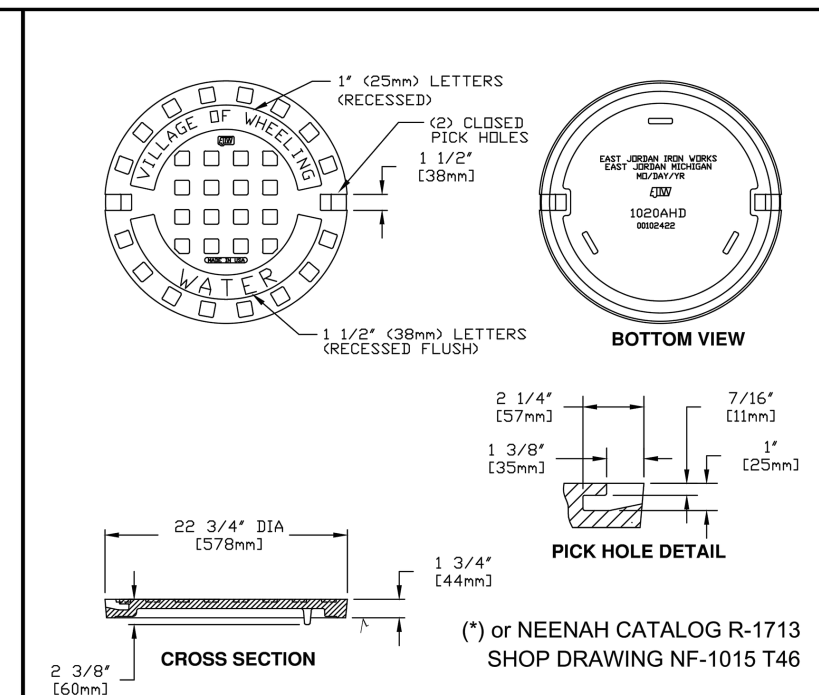

(*) or NEENAH CATALOG R-1713 SHOP DRAWING NF-1015 T46

√ MACHINED SURFACE

(*) EAST JORDAN IRON WORKS, INC.
P.O. BOX 439
EAST JORDAN, MI. 49727
1-800-874-4100
FAX 231-536-4458

DRAWN	DATE
SMH	11/11/02
APPROVED	DATE

SPECIAL LETTERED COVER

(*) PRODUCT NO. 00102422

(*) CATALOG NO. 1020A

REF. PRODUCT DRAWING 00102067

EST. WT. COVER WT: 115 LBS (52kg)

OPEN AREA N/A

MAT'L SPEC. COVER – GRAY IRON ASTM A48 CL 35

LOAD RATING HEAVY DUTY

VILLAGE OF WHEELING ILLINOIS | VILLAGE OF WHEELING ENGINEERING DIVISION 2 COMMUNITY BOULEVARD WHEELING, IL 60090 WWW.WHEELINGIL.GOV

FRAME AND CLOSED LID WATER MANHOLE STANDARD

VILLAGE OF WHEELING SPECIFICATIONS AND DETAILS | FILE LOCATION N:\ENGINEERING\STANDARDS\ WATER

REVISIONS	
S.W.	2-24-00 AUTOCAD FILE
S.W.	9-19-01 PER COMMENTS
S.W.	11-12-02 NPDES PHASE II
S.W.	02-07-03 ADDING NEENAH
C.J.C.	01-29-08 AUTOCAD FILE

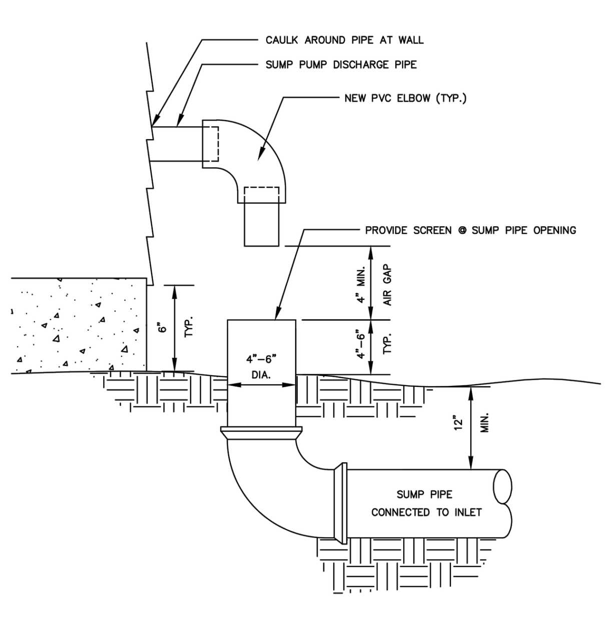

VILLAGE OF WHEELING ILLINOIS | VILLAGE OF WHEELING ENGINEERING DIVISION 2 COMMUNITY BOULEVARD WHEELING, IL 60090 WWW.WHEELINGIL.GOV

SUMP PUMP DISCHARGE STANDARD

VILLAGE OF WHEELING SPECIFICATIONS AND DETAILS | FILE LOCATION N:\ENGINEERING\STANDARDS\ STORM

REVISIONS	
S.W.	5-17-00 AUTOCAD FILE
S.W.	11-07-01 PER COMMENTS
K.R.G.	9-11-06 AUTOCAD FILE

SHOULD A CONFLICT ARISE BETWEEN MANHARD DETAILS AND THE VILLAGE DETAILS, THE VILLAGE DETAILS SHALL TAKE PRECEDENCE.

DRAWN BY	REVISIONS	DATE

Manhard CONSULTING LTD

900 Woodlands Parkway, Vernon Hills, IL 60061 ph:847.634.5550 fx:847.634.0095 manhard.com
Civil Engineers • Surveyors • Water Resource Engineers • Water & Wastewater Engineers
Construction Managers • Environmental Scientists • Landscape Architects • Planners

Exhibit received May 17, 2016

NORTHGATE CROSSING - PHASE 3

WHEELING, COOK COUNTY, ILLINOIS

CONSTRUCTION DETAILS

PROJ. MGR.: JDF
PROJ. ASSOC.: DAM
DRAWN BY: DAM
DATE: 05–17–16
SCALE: N.T.S.

SHEET 11 OF 13

KNZWH

© 2015 MANHARD CONSULTING, LTD. ALL RIGHTS RESERVED

PENDING APPROVAL - NOT FOR CONSTRUCTION

May 17, 2016 – 16:15 Dwg Name: P:\Knzwh\dwg\Eng\Final Drawings\Plan Set\09 CONSTRUCTION DETAILS.dwg Updated By: skolev

06-01-15

MANHARD CONSULTING, LTD.
STANDARD SPECIFICATIONS

GENERAL CONDITIONS CONTRACTOR acknowledges and agrees that the use and reliance of these Plans and Specifications is sufficient consideration for CONTRACTOR'S covenants stated herein.

DEFINITION OF TERMS

a. "CLIENT" shall mean REVA DEVELOPMENT PARTNERS, "ENGINEER" shall mean Manhard Consulting, Ltd., a Civil Engineering consultant on the subject project.

b. "PLANS and SPECIFICATIONS" shall mean the Civil Engineering PLANS and SPECIFICATIONS prepared by the ENGINEER, which may be a part of the contract documents for the subject project.

c. "CONTRACTOR" shall mean any person or entity performing any work described in the PLANS and SPECIFICATIONS.

d. "JURISDICTIONAL GOVERNMENTAL ENTITY" shall mean any municipal, county, state or federal unit of government from whom an approval, permit and/or review is required for any aspect of the subject project.

INTENT OF THE PLANS AND SPECIFICATIONS

The intent of the PLANS and SPECIFICATIONS is to set forth certain requirements of performance, type of equipment and structures, and standards of materials and construction. They may also identify labor and materials, equipment and transportation necessary for the proper execution of the work but are not intended to be infinitely determined so as to include minor items obviously required as part of the work. The PLANS and SPECIFICATIONS require new material and equipment unless otherwise indicated, and to require complete performance of the work in spite of omissions of specific references to any minor component part. It is not intended, however, that materials or work not covered by or properly inferred from any heading, branch, class or trade of the SPECIFICATIONS shall be supplied unless distinctly so noted. Materials or work described in words, which so applied have a well-known technical or trade meaning, shall be held to refer to such recognized standards.

INTERPRETATION OF PLANS AND SPECIFICATIONS

a. The CLIENT and/or CONTRACTOR shall promptly report any errors or ambiguities in the PLANS and SPECIFICATIONS to the ENGINEER. Questions as to meaning of PLANS and SPECIFICATIONS shall be interpreted by the ENGINEER, whose decision shall be final and binding on all parties concerned.

b. The ENGINEER will provide the CLIENT with such information as may be required to show revised or additional details of construction.

c. Should any discrepancies or conflicts on the PLANS or SPECIFICATIONS be discovered either prior to or after award of the contract, the ENGINEER's attention shall be called to the same before the work is begun thereon and the proper corrections made. Neither the CLIENT nor the CONTRACTOR may take advantage of any error or omissions in the PLANS and SPECIFICATIONS. The ENGINEER will provide information when errors or omissions are discovered.

GOVERNING BODIES

All works herein proposed shall be completed in accordance with all requirements of any JURISDICTIONAL GOVERNMENTAL ENTITY, and all such pertinent laws, directives, ordinances and the like shall be considered to be a part of these SPECIFICATIONS. If a discrepancy is noted between the PLANS and SPECIFICATIONS and requirements of any JURISDICTIONAL GOVERNMENTAL ENTITY, the CLIENT and/or the CONTRACTOR shall immediately notify the ENGINEER in writing.

LOCATION OF UNDERGROUND FACILITIES AND UTILITIES

When the PLANS and SPECIFICATIONS include information pertaining to the location of existing underground facilities and utilities (including but not limited to water mains, sanitary sewers, storm sewers, electric, telephone, gas and cable TV lines), such information represents only the opinion of the ENGINEER as to the approximate location and elevation of such facilities and utilities. At the locations wherein detailed positions of these facilities and utilities become necessary to the new construction, including all points of connection, the CONTRACTOR shall furnish all labor and tools to verify or definitely establish the horizontal location, elevation, size and material (if appropriate) of the facilities and utilities. The CONTRACTOR shall notify the ENGINEER at least 48 hours prior to construction if any discrepancies in existing utility information or conflicts with existing utilities exist. The ENGINEER assumes no responsibility whatever with respect to the sufficiency or accuracy of the information shown on the PLANS and SPECIFICATIONS relative to the location of underground facilities and utilities, nor the manner in which they are removed or adjusted.

It shall be the CONTRACTOR's responsibility prior to construction, to notify all Utility Companies of the intent to begin construction and to verify the actual location of all such facilities and utilities. The CONTRACTOR shall also obtain from the respective Utility Companies the working schedules for removing or adjusting these facilities.

UNSUITABLE SOILS

The PLANS have been prepared by the ENGINEER based on the assumption that all soils on the project are suitable to support the proposed improvements shown. The CLIENT or CONTRACTOR shall immediately notify the ENGINEER if he discovers or encounters an obstruction that prevents the installation of the improvement according to the line and grades shown on the PLANS.

PROTECTION OF TREES

All trees that are not to be removed shall be protected from damage. Trees shall not be removed unless requested to do so in writing by the CLIENT.

NOTIFICATION OF OWNERS OF FACILITIES AND UTILITIES

The CONTRACTOR shall notify all applicable Jurisdictional Governmental Entities or utility companies, i.e., water, sewer, electric, telephone, gas and cable TV prior to beginning any construction so that said entity or company can establish the location and elevation of underground pipes, conduits or cables adjoining or crossing proposed construction.

TRAFFIC CONTROL

The CONTRACTOR shall provide when required by any JURISDICTIONAL GOVERNMENTAL ENTITY, all signs, equipment, and personnel necessary to provide for safe and efficient traffic flow in all areas where the work will interrupt, interfere or cause to change in any form, the conditions of traffic flow that existed prior to the commencement of any portions of the work. The CLIENT may, at his discretion, require the CONTRACTOR to furnish traffic control under these or other circumstances where in his opinion it is necessary for the protection of life and property. Emergency vehicle access shall be maintained at all times. Unless authorized by the CLIENT or CLIENT's construction representative, all existing access points shall be maintained at all times by the CONTRACTOR. The need for traffic control shall be anticipated by the CLIENT.

WORK AREA

The CONTRACTOR, his agents and employees and their employees and all equipment, machinery and vehicles shall confine their work within the boundaries of the project or work area specified by the Client. The CONTRACTOR shall be solely liable for damage caused by him or his agents and employees and their equipment, machinery and vehicles on adjacent property or areas outside designated work areas.

UTILITY POLES

It shall be the responsibility of the CONTRACTOR to arrange for the relocation or bracing of existing utility poles that may be within the working limits of this contract. It is expressly understood that all work and costs connected with the maintenance of these utility poles, their temporary relocations, etc., shall be the responsibility of the CLIENT or the CONTRACTOR.

RESTORATION

It is the intent of these SPECIFICATIONS that clean-up and final restoration shall be performed immediately upon completion of each phase of the work, both inside and outside the Project, or when so directed by the CLIENT so that these areas will be restored as nearly as possible to their original condition or better, and shall include but not be limited to, restoration of maintained lawns and rights-of-way, roadways, driveways, sidewalks, ditches, bushes, hedges, trees, shrubs, fences, mailboxes, sewers, drain tiles, water mains, etc.

CLEANING UP

The CONTRACTOR shall at all times keep the premises free from accumulations of waste material or rubbish caused by his employees or work, and at the completion of the work he shall remove all his rubbish, tools, scaffolding and surplus materials and shall leave his work "broom clean" or its equivalent, unless more exactly specified.

ROAD CLEANING

The CONTRACTOR shall maintain roadways adjoining the project site free from mud and debris at all times. If mud and/or debris is carried onto the roadways from vehicles entering onto the highway from either the CONTRACTOR's trucks, his employees' vehicles, or his material suppliers, the CONTRACTOR shall immediately remove said mud and/or debris.

SAFETY AND PROTECTION

The CONTRACTOR shall be solely and completely responsible for the conditions of the job site, including safety of all persons and property during performance of the work. This requirement shall apply continuously and not be limited to normal working hours. The CONTRACTOR shall comply with all applicable Laws and Regulations relating to the safety of persons or property, or to the protection of persons or property from damage, injury, or loss; and shall erect and maintain all necessary safeguards for such safety and protection. CONTRACTOR's duties and responsibilities for safety and for protection of the work shall continue until such time as all work is completed and the CLIENT has notified CONTRACTOR that the work is acceptable. The duties of the ENGINEER do not include review of the adequacy of either the CONTRACTOR's or the general public's safety in, on, or near the construction site.

HOLD HARMLESS

To the fullest extent permitted by law, any CONTRACTOR; material supplier or other entity by use of these plans and specifications hereby waives any right of contribution and agrees to indemnify, defend, save and hold harmless the CLIENT and ENGINEER and its agents, employees and consultants from and against all manner of claims, causes, causes of action, damages, losses and expenses, including but not limited to, attorneys' fees arising out of, resulting from or in connection with the performance of any work, pursuant to or with respect to these plans and specifications. However, this indemnity shall not be construed to indemnify ENGINEER, its consultants, agents or employees against its own negligence.

Claims, damages, losses and expenses as these words are used in the Agreement shall mean and include, but not be limited to (1) injury or damage occurring by reason of the failure of or use or misuse of any hoist, riggings, blocking, scaffolding or any and all other kinds of items of equipment, whether or not the same be owned, furnished or loaned by any part or entity, including any contractor; (2) all attorneys' fees and costs incurred in bringing an action to enforce the provisions of this indemnity; (3) costs for time expended by the indemnified party and its employees, at its usual rates plus costs or travel, long distance telephone and reproduction of documents and (4) consequential damages.

In any and all claims against the CLIENT or ENGINEER or any of their agents or employees and consultants by any party, including any employee of the CONTRACTOR or any Subcontractor, anyone directly or indirectly employed by any of them or anyone for whose acts any of them may be liable, the indemnification obligation shall not be limited in any way by any limitation on the amount of type of damages, compensation or benefits payable by or for the CONTRACTOR or any Subcontractor under workers' or workmen's compensation acts, disability benefit acts or other employee benefit acts or any insurance maintained by CONTRACTOR or any Subcontractor or any other party.

INSURANCE

Any party using or relying on these plans, including any contractor, material supplier, or other entity shall obtain, (prior to commencing any work) general public liability insurance insuring against all damages and claims for any bodily injuries, death or property damage arising out of any work, including the construction work provided for in these plans, and shall name the CLIENT and ENGINEER and its consultants, agents and representatives as additional insureds under such insurance policy; provided that any party using or relying on these plans having obligations to maintain specific insurance by reason of any agreement with CLIENT or any CONTRACTOR or ENGINEER shall provide evidence and certificates of insurance as required by such contract or agreement. Such insurance must contain a clause stating that the insurance is primary coverage for ENGINEER and ENGINEER's other applicable coverage is considered secondary. Such insurance shall not limit any liability of any party providing work or services or providing materials.

THIRD PARTY BENEFICIARY

Manhard Consulting, Ltd., the ENGINEER, is intended to be a third party beneficiary of this willing agreement and requirement.

Note: These Specifications are for Northern Illinois.

DETAILED SPECIFICATIONS

I. DEMOLITION

The CONTRACTOR shall coordinate with respective utility companies prior to the removal and/or relocation of utilities. The CONTRACTOR shall coordinate with the utility company concerning portions of work which may be performed by the Utility Company's forces and any fees which are to be paid to the utility company for their services. The CONTRACTOR is responsible for paying for all fees and charges.

Should removal and/or relocation activities damage features indicated to remain, the CONTRACTOR shall provide new materials/structures in accordance with the contract documents. Except for materials designed to be relocated on this plan, all other construction materials shall be new.

Prior to demolition occurring, all erosion control devices are to be installed.

All existing utility lines and conduits located under proposed buildings shall be removed and properly backfilled. All utility lines and conduits located under drives, on-site roads, parking lots or sidewalks shall be filled with a flowable backfill and end plugged. All existing structures shall be removed. All existing utility lines located under landscape areas shall be left in place and plugged at all structures.

The CONTRACTOR is responsible for demolition, removal and disposal (in a location approved by all JURISDICTIONAL GOVERNING ENTITIES) of all structures, pads, walls, flumes, foundations, road, parking lots, drives, drainage structures, utilities, etc., such that the improvements shown on these plans can be constructed. All demolition work shall be in accordance with all applicable federal, state and local requirements. All facilities to be removed shall be undercut to suitable material and brought to grade with suitable compacted fill material per the specifications.

The CONTRACTOR is responsible for obtaining all permits required for demolition and disposal.

Electrical, telephone, cable, water, fiber optic cable and/or gas lines needing to be removed shall be coordinated by the CONTRACTOR with the affected utility company.

CONTRACTOR must protect the public at all times with fencing, barricades, enclosures, and other appropriate best management practices.

Continuous access shall be maintained for surrounding properties at all times during demolition.

All fire access lanes within the project area shall remain in service, clean of debris, and accessible for use by emergency vehicles.

The CONTRACTOR shall coordinate water main work with the Fire Department and the JURISDICTIONAL GOVERNING ENTITY to plan the proposed improvements and to ensure adequate fire protection is available to the facility and site throughout this specific work and through all phases of construction. CONTRACTOR shall be responsible for any required water main shut offs with the JURISDICTIONAL GOVERNING ENTITY during construction. Any costs associated with water main shut offs will be the responsibility of the CONTRACTOR and no extra compensation will be provide.

CONTRACTOR shall maintain all existing parking areas, sidewalks, drives, etc. clear and free from any construction activity and/or material to ensure easy and safe pedestrian and vehicular traffic to and from the site. CONTRACTOR shall coordinate/phase all construction activity within proximity of the building and utility interruptions with the facility manager to minimize disturbance and inconvenience to facility operations.

CONTRACTOR may limit saw-cut and pavement removal to only those areas where it is required as shown on these construction plans, however if any damage is incurred on any of the surrounding pavement, etc. the CONTRACTOR shall be responsible for it's removal and repair.

Any existing wells encountered shall be exposed and sealed 3' below proposed finish grade by the CONTRACTOR in accordance with Section 920.120 (latest edition) of the Illinois Water Well Construction Code, Department of Public Health, and all applicable local rules and regulations. CONTRACTOR is responsible for obtaining all permits required by JURISDICTIONAL GOVERNMENTAL ENTITIES for abandoning existing wells.

Any existing septic tanks and grease traps encountered shall have all liquids and solids removed and disposed of by a licensed commercial hauler in accordance with JURISDICTIONAL GOVERNING ENTITY regulations, and the tank and grease traps shall then be filled with suitable materials or removed from the site and disposed of by the CONTRACTOR.

Voids left by any item removed under any proposed building, pavement, walk, etc. or within 24" thereof shall be filled and compacted with suitable materials by the CONTRACTOR.

The CONTRACTOR shall be responsible for the disconnection of utility services to the existing buildings prior to demolition of the buildings.

Any material containing asbestos found within existing structures shall be removed from the site and disposed of off-site by the CONTRACTOR in accordance with County, State and Federal regulations.

CONTRACTOR shall develop and implement a daily program of dust control and shall submit and obtain JURISDICTIONAL GOVERNING ENTITY approval of dust control procedures prior to demolition of any structures. Modification of dust control procedures shall be performed by the CONTRACTOR to the satisfaction of the JURISDICTIONAL GOVERNING ENTITY as requested.

The CONTRACTOR shall coordinate all demolition with the JURISDICTIONAL GOVERNING ENTITY and CLIENT to ensure protection and maintenance of sanitary sewer and water utilities as necessary and to provide stormwater conveyance until new facilities are constructed, tested and placed into operation.

The locations of all existing utilities shown on this plan have been determined from the best information available and are given for the convenience of the CONTRACTOR and are not to be interpreted as the exact location, or as the only obstacles that may occur on the site. The ENGINEER assumes no responsibility for their accuracy. Prior to the start of any demolition activity, the CONTRACTOR shall notify the utility companies for location of existing utilities and shall verify existing conditions and proceed with caution around any anticipated features.

The CONTRACTOR is responsible for removing the existing irrigation system in the areas of proposed improvements. The contractor shall cap the existing irrigation system to remain such that the remaining system shall continue to function properly.

The parking lot shall be completed in sections such that it does not interrupt the facility operations. The CONTRACTOR shall coordinate with the construction manager for work to be performed.

II.EARTHWORK

STANDARDS

This work shall be completed in conformance with the applicable sections of the Standard Specifications for Road and Bridge Construction, Department of Transportation, State of Illinois, latest edition except as modified below.

SOIL BORING DATA

Copies of results of soil boring and reports, if such borings were taken by the CLIENT in the vicinity of the proposed construction site, should be made available by the CLIENT to the CONTRACTOR. These borings are presented for whatever purpose the CONTRACTOR chooses to make of them. The ENGINEER makes no representation or warranty regarding the number, location, spacing or depth of borings taken, nor of the accuracy or reliability of the information given in the results thereof.

Further, the ENGINEER does not assume responsibility for the possibility that during construction, the soil and groundwater condition may be different than indicated. Neither does the ENGINEER assume responsibility for variations of soil and groundwater at location between borings. The CONTRACTOR is required to make its own borings, explorations and observations to determine soil and groundwater conditions.

EARTHWORK CALCULATIONS AND CROSS SECTIONS

The CONTRACTOR understands that any earthwork calculations, quantities or cross sections that have been furnished by the ENGINEER are for information only and are provided without any guarantee by the CLIENT or ENGINEER whatsoever as to their sufficiency or accuracy. CONTRACTOR warrants that he has performed his own subsurface investigations as necessary and his own calculations and cross sections to determine site soil conditions and earthwork volumes. The ENGINEER makes no representation or guarantee regarding earthwork quantities or that the earthwork for this project will balance due to the varying field conditions, changing soil types, allowable construction to tolerances and construction methods that are beyond the control of the ENGINEER.

CLEARING, GRUBBING AND TREE REMOVAL

The site shall be cleared, grubbed, and trees and stumps removed where designated on the PLANS. Trees designated to remain shall be protected from damage.

TOPSOIL STRIPPING

Upon completion of demolition, clearing, grubbing and tree removal, all topsoil shall be stripped from under all buildings and pavements areas, and other areas necessary to complete the work. Topsoil stripped shall be placed in stockpiles in locations as designated by the CLIENT.

TOPSOIL RESPREAD

Upon completion of roadway and/or parking lot improvements and installation of underground utilities a minimum of four inches (4") of topsoil shall be respread over all unpaved areas which have been disturbed by earthwork construction, except building pads and other designated areas, which shall be kept free from topsoil.

SEEDING

Upon completion of topsoil respread, the CONTRACTOR shall apply seed and fertilizer to all respread areas in accordance with IDOT standards or as designated on landscape drawings and specifications provided by the CLIENT.

SODDING

Upon completion of topsoil respread, the CONTRACTOR shall install sod to all areas designated on the plans or as designated on the landscape drawings and specifications provided by the CLIENT.

EXCAVATION AND EMBANKMENT

Upon completion of topsoil stripping, all excavation and embankments shall be completed as shown on the PLANS. All suitable excavated materials shall be hauled, placed (moisture conditioned if necessary) and compacted in the embankment areas. The CONTRACTOR shall include all dewatering, temporary ditching and culverts necessary to complete the excavation and embankment.

Specifically included in the scope of Excavation and Embankments is grading and shaping of all cut or fill areas including swales and ditches; handling of sewer spoil, etc., and all work required to provide positive drainage at the end of each working day and upon completion of a section.

The CONTRACTOR shall be responsible for the excavation of all swales and ditches and for the excavation or filling of the roads, building pads and parking lots within the work limits to lines & grades shown on the plans. He shall be responsible for obtaining compaction in accordance with the minimum values listed in the table below for all embankments unless more stringent values are listed in the soils report or are approved by the CLIENT, and to use any method approved by the CLIENT necessary to obtain this compaction (i.e., soil fabric or any undercutting that may be required).

Type Material	Percent Compaction Standard	Pavement & Floor Slabs	Grass Areas
Sandy Soils	Modified Proctor	95%	90%
Clayey Soils	Standard Proctor	95%	90%

The CONTRACTOR shall notify the CLIENT if proper compaction cannot be obtained so that the CLIENT may determine what remedial measures may be needed.

A soils testing firm employed by the CLIENT shall determine which soils are unsuitable. Materials in their natural state being defined as unsuitable that would be suitable material if moisture conditioned, shall be conditioned by the CONTRACTOR and used as suitable embankment material or hauled from the site.

For purposes of definition, unsuitable material shall be as follows unless determined otherwise by the Soils Engineer:

1. Any soil whose optimum moisture content exceeds 25%.
2. Any cohesive soil with an unconfined compressive strength of 1.5 tons per square foot or less.
3. Any soil whose silt content exceeds 60% by weight.
4. Any soil whose maximum density is less than 100 pounds per cubic foot.
5. Any soil containing organic, deleterious, or hazardous material.

Upon completion of excavation and shaping of the water retention areas intended to maintain a permanent pool of water, all silt seams and granular or sandy soils shall be removed to a minimum depth of three feet below the subgrade and replaced with an impermeable clay liner, including adjacent to and under storm sewer inlets and outlets. It is the intent of these PLANS and SPECIFICATIONS that the CONTRACTOR shall prepare the lake bottoms, side slopes, and compaction thereof such that the lakes will maintain the proposed normal water level and that leakage does not exceed ½ inch per week.

Ditches and swales are to be excavated to the lines and grades indicated on the PLANS. All suitable materials excavated from the ditches shall be used in construction of the embankments.

The CONTRACTOR shall notify the CLIENT immediately upon encountering groundwater during excavation. If in the opinion of the CLIENT or the JURISDICTIONAL GOVERNING ENTITY this condition necessitates the installation of perforated drain tile bedded in washed gravel or open storm sewer joints wrapped with fabric, the CONTRACTOR shall install the same.

During excavation and embankment, grades may be adjusted to achieve an overall site earthwork balance. The CONTRACTOR shall cooperate fully with the CLIENT in adjustment of grades, construction methods and placement of material to meet the above goals and shall immediately advise CLIENT if he believes that the earthwork will not balance.

It is the intent of these PLANS that storm waters falling on the site be diverted into sedimentation / lake / detention basins during construction. The CONTRACTOR shall construct and maintain any temporary ditches or swales that are necessary to accomplish this prior to beginning mass excavation.

EROSION CONTROL

Suitable erosion control practices shall be maintained by the CONTRACTOR in accordance with Illinois Urban Manual and all applicable Soil Erosion and Sedimentation Control ordinances and the PLANS.

UNDERCUTTING DURING EARTHWORK

If the subgrade cannot be dried adequately by discing as outlined above for placement of material to planned grades and if the CLIENT determines that the subgrade does not meet the standards set forth above, the CLIENT may require undercutting.

MISCELLANEOUS CONTRACT ITEMS

The following items may be required at the CLIENT's option, as indicated on the PLANS or as required by the JURISDICTIONAL GOVERNING ENTITY:

(1) **GEOTEXTILE FABRIC**

Geotextile fabric or approved equal shall be provided in areas as designated by the CLIENT, as indicated on the PLANS or as required by the JURISDICTIONAL GOVERNING ENTITY where proper compaction of embankments over existing soft soils is not possible. Geotextile fabric shall meet the material specifications of and shall be installed in accordance with the above standards.

(2) **EROSION CONTROL BLANKET**

Erosion control blanket or approved equal shall be provided in areas as designated by the CLIENT, as indicated on the PLANS or as required by the JURISDICTIONAL GOVERNING ENTITY for the stabilization of disturbed areas. Erosion control blanket shall meet the material specifications of and shall be installed in accordance with the above standards, the Illinois Urban Manual and/or the details shown on the PLANS.

III.UNDERGROUND IMPROVEMENTS

A. GENERAL

STANDARDS

All underground improvements shall be constructed and tested in accordance with the Standard Specifications for Water and Sewer Construction in Illinois and Standard Specifications for Road and Bridge Construction, Department of Transportation, State of Illinois, latest edition. In the event of conflicting guidelines, the more restrictive shall govern.

SELECTED GRANULAR BACKFILL

Selected Granular Backfill shall be required for all sewer and water main trenches lying under existing or proposed streets, driveways, parking lots and within 24" thereof, and where noted on PLANS. All material placed in such trenches shall be in accordance with the above standards.

MANHOLES, CATCH BASIN, INLETS & VALVE VAULTS

All Manholes, Catch Basins, Inlets, and Valve Vaults shall be constructed of reinforced precast concrete ring construction with tongue and groove joints in conformance with the latest revision of ASTM designation C-478. All joints between sections and frames (except sanitary manholes, see Section IIIB Manholes, below) shall be sealed with mastic type bituminous jointing compound. CONTRACTOR shall remove all excess mastic on inside of structure and butter joints with mortar. Manholes are to have offset cones except that no cone shall be used on storm manholes 6'-0" deep or less in which case a reinforced concrete flat top section shall be used, and Valve Vaults shall have concentric cones. Only concrete adjustment rings will be permitted where necessary and shall be limited to two adjustment rings totaling not more than 8" in height. All manholes and catch basin steps shall be copolymer polypropylene with continuous ½" steel reinforcement as manufactured by MA Industries, or approved equal.

AUGER/BORING AND CASING

Casing pipe shall be welded steel pipe, installed where shown on the PLANS. The carrier pipe shall be securely blocked and banded and sanitary and storm sewers shall maintain the specified gradient. Upon installing the carrier pipe the ends shall be sealed with hydraulic cement.

AUGER (OPEN BORE)

The CONTRACTOR shall auger (open bore) where noted on PLANS.

HORIZONTAL AND VERTICAL SEPARATION OF WATER AND SEWER MAINS

Horizontal and vertical separation of water and sewer mains shall be in accordance with Standard Specifications for Water and Sewer Construction in Illinois Section 41-2.01A and 41-2.01B and Standard Drawing 18, 19, 20, 21, 22, 23 and 24.

STRUCTURE ADJUSTMENTS

Structures shall be adjusted to the finished grade as shown on PLANS.

B. SANITARY SEWERS AND APPURTENANCES

SANITARY SEWER PIPE

Sanitary sewer pipe including building services, shall conform to the following:

(1) Polyvinyl Chloride (PVC) Sewer Pipe shall conform to ASTM D3034 (4-inch thru 15-inch) or ASTM F679 (18-inch thru 48-inch) minimum SDR 26 with flexible elastomeric seal gasket gasketed joints conforming to ASTM D3212 and F477.

Sanitary sewers shall include bedding and backfilling.

MANHOLES

Manholes shall be constructed in conformance with Section IIIA Manholes, etc. above. The concrete base and bottom section shall be constructed of precast reinforced concrete monolithically cast sections including benches, pipe connection and invert flow lines. Manhole frame and lids shall be Neenah R-1772 or approved equal, with lids imprinted "SANITARY", with recessed pick holes. Manhole joints between adjustment rings and frames and between manhole sections shall be set on preformed plastic gasket consisting of a homogeneous blend of refined hydrocarbon resins and plasticizing compounds reinforced with inert mineral filler to provide a water tight seal. All pipe connection openings shall be precast with resilient rubber watertight pipe sleeves. A 10" elastomeric band (chimney seal) shall be installed extending from the manhole top to the manhole frame as shown on detail. Manholes shall include steps, frame & grate, bedding, and trench backfill.

FOUNDATION, BEDDING AND HAUNCHING

Foundation, Bedding and Haunching shall be wet coarse aggregate or moist fine aggregate in accordance with the above standards and placed as shown on the detail.

TESTING

Sanitary sewers shall be air tested and tested for deflection in accordance with the requirements of Section 31-1.12 "TESTING AND INSPECTION FOR ACCEPTANCE OF SANITARY SEWERS" of the Standard Specifications for Water and Sewer Construction in Illinois or the JURISDICTIONAL GOVERNING ENTITY, whichever is more restrictive. In addition, a televised inspection of the completed sanitary sewers shall be conducted and a copy of the videotape and report furnished to the JURISDICTIONAL GOVERNING ENTITY.

All sanitary manholes are to be tested for water tightness in accordance with ASTM C969 "Standard Practice for Infiltration and Exfiltration Acceptance Testing of Installed Precast Concrete Pipe Sewer Lines", or ASTM C1244 "Standard Test Method for Concrete Sewer Manholes by the Negative Pressure (Vacuum) Test".

SERVICES

A wye branch or "tee" and sanitary service line, properly plugged and sealed shall be constructed as shown on the PLANS. The ends of all services shall be marked with a 4"x4" post extending 36" above grade and painted red. The CONTRACTOR shall keep accurate records of all Wye or Tee locations as measured from the downstream manhole as well as the service lengths and furnish same to CLIENT.

RISERS

Risers shall be constructed in locations as shown on the PLANS and according to the detail.

DROP MANHOLE CONNECTIONS

Drop manhole connections to existing manholes shall be constructed according to the PLANS and the detail.

SANITARY SEWER FORCE MAIN

Sanitary sewer force main shall conform to the following:

(1) Polyvinyl Chloride (PVC) Pressure Pipe conforming to the latest revision of ANSI/AWWA C900, Class 150 with integral bell and flexible elastomeric gasket joints conforming to ASTM F477.

Force mains shall have a minimum of five feet six inches (5'-6") of cover and shall include bedding and trench backfill.

Upon completion of installation, force mains are to be plugged and pressure tested at 2 times the working pressure or total dynamic head for a period of 10 minutes, with no loss of pressure or as required by the JURISDICTIONAL GOVERNING ENTITY, whichever is more stringent.

TELEVISION INSPECTION

Upon completion of construction a television inspection of the sanitary sewer system shall be performed on all portions of the sewer if required by the JURISDICTIONAL GOVERNING ENTITY. Videotapes and written report of all television inspections shall be provided to the CLIENT. The form of report and type and format of the videotape shall be approved by the JURISDICTIONAL GOVERNING ENTITY.

All sewers and appurtenances shall be cleaned prior to inspection and testing required by this section.

All defects and corrective work required as the result of television inspection shall be performed by the CONTRACTOR without delay. All dips, cracks, leaks, improperly sealed joints and departures from approved grades and alignment shall be repaired by removing and replacing the involved sections of pipe. Upon completion thereof, the sewer shall be retested and such further inspection made as may appear warranted by the CLIENT.

MISCELLANEOUS

All floor drains shall be connected to the sanitary sewer.

C. WATER MAINS AND APPURTENANCES

WATER MAIN PIPE (3" AND LARGER)

Water main pipe shall conform to the following:

(1) Ductile iron cement lined pipe conforming to the latest revision of ANSI/AWWA C151/A21.51, Thickness Class 52, minimum 150 psi working pressure with "push on" type joints.(2)

Installation shall be in accordance with ANSI/AWWA C600 (Ductile Iron) or ANSI/AWWA C605 (PVC). All water main shall have mechanical joint cast iron or ductile iron fittings in accordance with ANSI/AWWA C110/A21.10 or compact ductile iron fittings in accordance with ANSI/AWWA C153/A21.53 with 250 psi working pressure.

Poured or monolithic concrete thrust blocks are required to brace all tees, plugs, caps, and bends of 11 1/4 degree deflection or greater. Minimum cover for all water mains, including services, shall be 5'-6" from the finished grade. Water main shall include bedding and backfilling.

WATER VALVES

All valves shall be resilient wedge gate valves conforming to the latest revision of ANSI/AWWA C515, with a rated working pressure of 200 psi in accordance with JURISDICTIONAL GOVERNING ENTITY requirements, except that butterfly valves conforming to ANSI/AWWA C504 shall be constructed on all water mains 16" diameter and larger. Valves shall be non-rising stem and shall close by turning clockwise.

VALVE BOXES

Valve boxes shall be constructed in conformance with the standard detail. Valve boxes shall be cast iron extension screw type having lids imprinted with the letters "WATER".

FIRE HYDRANTS

Fire Hydrants shall be per JURISDICTIONAL GOVERNING ENTITY requirements. All fire hydrants shall be located as shown on the PLANS and shall be painted in a manner acceptable to the JURISDICTIONAL GOVERNING ENTITY after installation and shall be adjusted to final grade.

TAP, STOPS AND BOX

The CONTRACTOR shall determine from the JURISDICTIONAL GOVERNING ENTITY as to the exact style, type, and manufacture of corporation stops, ground key stops and services boxes preferred by the JURISDICTIONAL GOVERNING ENTITY and shall furnish same.

SMALL WATER SERVICES (2" DIAMETER OR LESS)

Water services shall be type K copper size as shown on PLANS, and constructed where shown on the PLANS. The ends of all services shall be marked with a 4"x4" post extending 36" above grade and painted blue. The CONTRACTOR shall keep accurate records of tap locations and service box locations, as well as the service lengths and furnish same to CLIENT. Water services shall include bedding and backfilling.

DISINFECTION

Disinfections shall meet all of the requirements of the State of Illinois, Environmental Protection Agency, Public Water Supplies Division. The safe quality of the water supply shall be demonstrated by bacteriological analysis of samples collected at sampling taps on at least two consecutive days following disinfection of the mains and copies of the said report submitted to the JURISDICTIONAL GOVERNING ENTITY and the CLIENT.

PRESSURE TEST

Allowable leakage, test pressure and duration shall be as per the requirements of the JURISDICTIONAL GOVERNING ENTITY.

PRESSURE CONNECTION TO EXISTING WATER MAIN

The CONTRACTOR shall maintain system pressure on existing water main at all times. Existing water main shall be located and material excavated, and valve basin slab and main supports installed. The existing water main shall be cleaned and the exterior disinfected prior to installing the tapping tee (material to conform to AWWA C110). The tapping valve shall be installed (valve to conform to AWWA C500) and the pressure tap completed in accordance with the detail on the plans. Valve shall be constructed in conformance with the detail. Payment for pressure connection to existing water main shall include disinfection, tapping valve and tee, valve vault, frame and lid, bedding, and trench backfill.

POLYETHYLENE TUBE (FOR DUCTILE IRON WATER MAIN ONLY)

The CLIENT, or JURISDICTIONAL GOVERNING ENTITY may request that portions of the water main be enclosed in a polyethylene tube, Clow F-191 or approved equal installed as per the manufacturer's recommendations, should soil conditions so warrant its use.

FOUNDATION, BEDDING AND HAUNCHING

Foundation, Bedding and Haunching shall be wet coarse aggregate or moist fine aggregate in accordance with the above standards and placed as shown on the detail.

TRACER WIRE

If the distance between valves when installing PVC pipe exceeds 1,000', tracer wire stations will be required for current induction. Tracer wire stations in grass areas will be Rhino TriView Flex Tracing Wire Stations or approved equal. In paved areas, they will be Valvco Tracer Wire Access Box for H2O loading or approved equal.

For open cut construction, using PVC pipe, a continuous, insulated, 12 gauge copper wire suitable for direct burial shall be taped on top of all piping to provide for locating following construction. This wire shall be securely terminated inside every valve vault on stainless steel hardware with an exposed lead of at least 12". A mechanically secure and soldered connection shall be provided for all wire splices. Where construction is by directional drilling or similar trenchless technology the tracer wire shall be 3/16" 7x19 PVC coated stainless steel aircraft cable with minimum breaking strength of 3,700 lbs (Lexco, Chicago, IL). Or Trace-Safe water blocking

tracerwire RT series 19 gauge conductor (RT 1802W water, RT 1803W sewer).

Before final approval of any water main, there will be a monitored tracer wire continuity test in order to confirm proper installation of any tracer wire.

D. STORM SEWERS AND APPURTENANCES

STORM SEWER PIPE

Storm sewer pipe shall conform to the following:

(1) Reinforced concrete pipe minimum Class IV in conformance with the latest revision of ASTM designation C76 with C361 or C443 flexible gasket joints, except that bituminous mastic joints may be used in grass areas.

(2) Polyvinyl Chloride (PVC) Pipe: ASTM D3034 (4-inch thru 15-inch) or ASTM F679 (18-inch thru 36-inch), rated SDR 35, continually marked with manufacturer's name, pipe size, cell classification, SDR rating. Joints shall be flexible elastomeric seals conforming to ASTM D3212.

Precast tees, bends, and manholes may be used if permitted by the JURISDICTIONAL GOVERNMENTAL ENTITY.

Storm sewers may be constructed with reinforced concrete pipe using only flexible gasket joints (ASTM 361 or 443) for water main crossings.

Storm sewer shall include bedding and trench backfill.

MANHOLES, INLETS & CATCH BASINS

Manholes, Inlets and Catch Basins shall be constructed in conformance with Section IIIA Manholes, etc. above. The space between connecting pipes and the wall of the manhole shall be completely filled with non-shrink hydraulic cement mortar. Frames and lids shall be Neenah or approved equal unless specified otherwise on the PLANS. All frames and grates shall be provided such that the flange fully covers the opening plus 2" of the structure as a minimum. * Provide **"Vane"** Type frame & grate for all structures located in curb where gradient exceed 2.0%. Manholes shall include steps, frame & grate, bedding and trench backfill.

FOUNDATION, BEDDING AND HAUNCHING

Foundation, Bedding and Haunching shall be wet coarse aggregate or moist fine aggregate in accordance with the above standards and placed as shown on the detail.

UNDERDRAINS

Pipe underdrains shall be corrugated flexible plastic pipe conforming to AASHTO Designation M252 perforated corrugated polyethylene pipe (PE) with a smooth interior of the diameter indicated on the PLANS and wrapped in a soil filter fabric supplied and installed by the CONTRACTOR. Perforations may be circular or slotted, but shall provide a minimum of 1.0 in2/ft of inlet area. CONTRACTOR shall submit fabric and pipe catalogue Specifications for approval by the CLIENT. CONTRACTOR shall bed and backfill the underdrain in one of the following IDOT gradations of aggregate (CA-5, CA-7, CA-11, CA-14 or CA-15).

MISCELLANEOUS

(1) All existing field drainage tile or storm sewers encountered or damaged during construction shall either be restored to their original condition, properly rerouted and/or connected to the storm sewer system.

(2) Footing drains shall be connected to sump pumps or discharged directly into storm sewers. Footing drains or drainage tile shall not be connected to the sanitary sewer.

CONNECTION FOR STORM SERVICE TO STORM MAIN

Connections of storm sewer services to storm sewer mains should be made with manufactured tees when available. Availability of manufactured tees will be a function of the storm sewer material and pipe diameter size of the service sewer and main. If manufactured tees are not reasonably available, connections should be made in accordance with manufacturer's recommendations for all storm sewer other than concrete pipe. For concrete pipe connections without manufactured tees the storm sewer main shall be machine cored and the service sewer connected using non-shrink grout for the void between pipes. The service sewer shall be cut flush with the inside wall of the sewer main and not extend into the inside flow area of the main or otherwise impede flow.

IV. ROADWAY AND PARKING LOT IMPROVEMENTS

STANDARDS

Work shall be completed in accordance with the applicable sections of the Standard Specifications for Road and Bridge Construction, Department of Transportation, State of Illinois, latest edition (hereinafter referred to collectively as the "Standard Specifications") except as modified below and except that payment will be defined as detailed in the contract documents between the CLIENT and the CONTRACTOR. Supplementing the Standard Specifications shall be the applicable sections of the latest editions of the "Supplemental Specifications and Recurring Special Provisions", the "Manual on Uniform Traffic Control Devices for Streets and Highways" and the Illinois Supplement thereto, (hereinafter referred to collectively as the "MUTCD"). Any references to "ENGINEER" in the "Standard Specifications" shall be interpreted as the CLIENT or CLIENT's Construction Representative.

SUBGRADE PREPARATION

The CONTRACTOR shall be responsible for all subgrade compaction and preparation to the lines and grades shown on the plans.

AGGREGATE BASE COURSE TYPE 'B'

Aggregate Base Course Type B shall be limited to CA-6 or CA-10 gradation. Aggregate base courses shall be proof rolled as outlined below.

PROOF ROLL

The CONTRACTOR shall proof roll the subgrade with either a 2-axle truck loaded to 27,000 lbs. Or a 3-axle truck loaded to 45,000 lbs. or as specified by the JURISDICTIONAL GOVERNING ENTITY. The CLIENT and JURISDICTIONAL GOVERNING ENTITY shall observe and approve the proof rolling of the subgrade and the base course. Proof rolling tolerances shall be a maximum deflection of 1" for the subgrade and ½" for the base course. The above criteria is intended as a maximum deflection standard and that proof rolling of a majority of the area will have less deflection than specified above. In any case of deficiency, the subgrade and/or base course shall be repaired and retested before proceeding with the pavement construction.

Pavement subgrade material shall not be removed, placed or disturbed after proof roll testing has been completed prior to the pavement construction. Additional testing will be required if the pavement subgrade is disturbed and/or material is removed from or placed on the pavement subgrade after proof rolling approval.

Trucks or heavy equipment shall not travel on any pavement subgrade after final testing prior to pavement construction.

CONCRETE PAVEMENTS

Concrete pavements shall be constructed in accordance with American Concrete Institute Standard ACI330R-08 and as shown on the PLANS.

Slabs and driveway aprons shall be constructed with 6" x 6" - W1.4 x W1.4 welded wire fabric positioned on steel chair supports. Placing fabric during the concrete pouring operation will not be allowed.

Sawing of joints shall commence as soon as the concrete has cured and hardened sufficiently to permit sawing without excessive raveling, but no later than eight hours after the concrete has been placed. All joints shall be sawed to the depth as shown in the details and before uncontrolled shrinkage cracking take place. If necessary, the sawing operation shall occur during the day or at night, regardless of weekends, holidays or weather conditions. The CONTRACTOR shall be aware of jurisdictional noise ordinances and holiday restrictions for scheduling purposes.

The CONTRACTOR is responsible to guard fresh concrete until it sets and hardens sufficiently to prevent people from writing, walking, riding bicycles or otherwise permanently marking, defacing or causing depressions of any type in the concrete. Any concrete so marked will be removed and replaced by the CONTRACTOR at the CONTRACTOR's expense.

The CONTRACTOR shall protect the pavement against all traffic, including that of their own employees or other workers, until test specimens have attained the specified strength.

SIDEWALKS

Concrete sidewalks shall be constructed to width and thickness as shown on the PLANS. Sidewalks shall be thickened to a minimum of 6" at all driveways. All sidewalks shall be IDOT Class SI concrete, on aggregate base as shown on the detail. A ¾" expansion joint shall be provided when meeting existing sidewalk.

CURB AND GUTTER

Curb and gutter shall be as per the detail shown on the PLANS, which shall include compacted aggregate base course under the curb and gutter. All contraction and expansion joints shall be constructed as per the detail.

CONCRETE CURB AND GUTTER REMOVAL AND REPLACEMENT

The CONTRACTOR shall saw cut and remove the existing concrete curb where shown on the PLANS and install a curb of similar cross section and pavement to that removed (or depressed curb and gutter if shown on the PLANS). Upon completion of the curb and gutter any voids between the existing pavement and the new curb shall be filled with concrete to within 2" of the final surface, which is to be filled with bituminous pavement. The area behind the curb shall be filled and compacted with embankment material within 6" of the top of the new curb. The CONTRACTOR shall then restore the remaining 6" to its original condition (i.e., sod, gravel, topsoil). Where proposed curb connects to an existing curb, the existing curb shall be saw cut and then two 18" long x ¾" (#6) dowel bars shall be drilled and installed 9" into the existing and proposed curb. Bars shall be installed in a location similar to the expansion joint in the curb.

FRAME ADJUSTMENTS

The road contractor shall be responsible for making final adjustments and the setting on a bituminous mastic jointing compound all castings located in the roadway, sidewalks, and parking areas prior to construction of any curbing, sidewalk, or final surface. Any structures that need to be lowered, or raised in excess of 4" shall be completed and the work backcharged against the underground contractor. This Contractor shall also be responsible for cleaning all of the above structures immediately upon completion of his phase of work. This work shall be incidental to the cost of the pavement.

PAVEMENT MARKING - PAINT

The CONTRACTOR shall furnish and apply painted marking lines, letters & symbols of the patterns, sizes and colors where shown on the PLANS. Paint pavement marking shall be applied in accordance with the IDOT Standard Specifications.

PAVEMENT MARKING - THERMOPLASTIC

The CONTRACTOR shall furnish and apply extruded thermoplastic pavement marking lines, letters and symbols of the patterns, sizes and colors where shown on the PLANS. Thermoplastic pavement marking shall be installed in accordance with the IDOT Standard Specifications.

QUALITY CONTROL

The CONTRACTOR shall provide all testing necessary to ensure improvements are in accordance with the project specifications and provide testing documentation that specifications were met.

SHOULD A CONFLICT ARISE BETWEEN THE MANHARD SPECIFICATIONS AND THE VILLAGE SPECIFICATIONS, THE VILLAGE SPECIFICATIONS TAKE PRECEDENCE.

DATE	REVISIONS	DRAWN BY

Manhard CONSULTING LTD
900 Woodlands Parkway, Vernon Hills, IL 60061 ph:847.634.5550 fx:847.634.0095 manhard.com
Civil Engineers • Surveyors • Water Resource Engineers • Water & Wastewater Engineers
Construction Managers • Environmental Scientists • Landscape Architects • Planners

NORTHGATE CROSSING - PHASE 3
WHEELING, COOK COUNTY, ILLINOIS
CONSTRUCTION SPECIFICATIONS

Exhibit received May 17, 2016

PROJ. MGR.: JDF
PROJ. ASSOC.: DAM
DRAWN BY: DAM
DATE: 05–17–16
SCALE: N.T.S.

SHEET 12 OF 13
KNZWH

PENDING APPROVAL - NOT FOR CONSTRUCTION

© 2015 MANHARD CONSULTING, LTD. ALL RIGHTS RESERVED

January 29, 2016 – 22:24 Dwg Name: P:\Knzwh\dwg\Eng\Final Drawings\Plan Set\12 CONSTRUCTION SPECIFICATIONS.dwg Updated By: dmcclellan

ADVANCED DRAINAGE SYSTEMS, INC.

Northgate Crossing, Ph 3

Wheeling, IL

STORMWATER CHAMBER SPECIFICATIONS

1. CHAMBERS SHALL BE STORMTECH SC-740, SC-310, OR APPROVED EQUAL.
2. CHAMBERS SHALL BE MANUFACTURED FROM VIRGIN POLYPROPYLENE OR POLYETHYLENE RESINS.
3. CHAMBER ROWS SHALL PROVIDE CONTINUOUS, UNOBSTRUCTED INTERNAL SPACE WITH NO INTERNAL SUPPORT PANELS THAT WOULD IMPEDE FLOW OR LIMIT ACCESS FOR INSPECTION.
4. THE STRUCTURAL DESIGN OF THE CHAMBERS, THE STRUCTURAL BACKFILL, AND THE INSTALLATION REQUIREMENTS SHALL ENSURE THAT THE LOAD FACTORS SPECIFIED IN THE AASHTO LRFD BRIDGE DESIGN SPECIFICATIONS, SECTION 12.12, ARE MET FOR: 1) LONG-DURATION DEAD LOADS AND 2) SHORT-DURATION LIVE LOADS, BASED ON THE AASHTO DESIGN TRUCK WITH CONSIDERATION FOR IMPACT AND MULTIPLE VEHICLE PRESENCES.
5. CHAMBERS SHALL MEET ASTM F2922 (POLYETHYLENE) OR ASTM F2418 (POLYPROPYLENE), "STANDARD SPECIFICATION FOR THERMOPLASTIC CORRUGATED WALL STORMWATER COLLECTION CHAMBERS".
6. CHAMBERS SHALL BE DESIGNED AND ALLOWABLE LOADS DETERMINED IN ACCORDANCE WITH ASTM F2787, "STANDARD PRACTICE FOR STRUCTURAL DESIGN OF THERMOPLASTIC CORRUGATED WALL STORMWATER COLLECTION CHAMBERS".
7. ONLY CHAMBERS THAT ARE APPROVED BY THE SITE DESIGN ENGINEER WILL BE ALLOWED. THE CHAMBER MANUFACTURER SHALL SUBMIT THE FOLLOWING UPON REQUEST TO THE SITE DESIGN ENGINEER FOR APPROVAL BEFORE DELIVERING CHAMBERS TO THE PROJECT SITE:
   a. A STRUCTURAL EVALUATION SEALED BY A REGISTERED PROFESSIONAL ENGINEER THAT DEMONSTRATES THAT THE SAFETY FACTORS ARE GREATER THAN OR EQUAL TO 1.95 FOR DEAD LOAD AND 1.75 FOR LIVE LOAD, THE MINIMUM REQUIRED BY ASTM F2787 AND BY AASHTO FOR THERMOPLASTIC PIPE.
   b. A STRUCTURAL EVALUATION SEALED BY A REGISTERED PROFESSIONAL ENGINEER THAT DEMONSTRATES THAT THE LOAD FACTORS SPECIFIED IN THE AASHTO LRFD BRIDGE DESIGN SPECIFICATIONS, SECTION 12.12, ARE MET. THE 50 YEAR CREEP MODULUS DATA SPECIFIED IN ASTM F2418 OR ASTM F2922 MUST BE USED AS PART OF THE AASHTO STRUCTURAL EVALUATION TO VERIFY LONG-TERM PERFORMANCE.
   c. STRUCTURAL CROSS SECTION DETAIL ON WHICH THE STRUCTURAL EVALUATION IS BASED.
8. CHAMBERS AND END CAPS SHALL BE PRODUCED AT AN ISO 9001 CERTIFIED MANUFACTURING FACILITY.

IMPORTANT - NOTES FOR THE BIDDING AND INSTALLATION OF THE SC-310/SC-740 SYSTEM

1. STORMTECH SC-310 & SC-740 CHAMBERS SHALL NOT BE INSTALLED UNTIL THE MANUFACTURER'S REPRESENTATIVE HAS COMPLETED A PRE-CONSTRUCTION MEETING WITH THE INSTALLERS.
2. STORMTECH SC-310 & SC-740 CHAMBERS SHALL BE INSTALLED IN ACCORDANCE WITH THE "STORMTECH SC-310/SC-740/SC-780 CONSTRUCTION GUIDE".
3. CHAMBERS ARE NOT TO BE BACKFILLED WITH A DOZER OR AN EXCAVATOR SITUATED OVER THE CHAMBERS.

   STORMTECH RECOMMENDS 3 BACKFILL METHODS:
   - STONESHOOTER LOCATED OFF THE CHAMBER BED.
   - BACKFILL AS ROWS ARE BUILT USING AN EXCAVATOR ON THE FOUNDATION STONE OR SUBGRADE.
   - BACKFILL FROM OUTSIDE THE EXCAVATION USING A LONG BOOM HOE OR EXCAVATOR.
4. THE FOUNDATION STONE SHALL BE LEVELED AND COMPACTED PRIOR TO PLACING CHAMBERS.
5. JOINTS BETWEEN CHAMBERS SHALL BE PROPERLY SEATED PRIOR TO PLACING STONE.
6. MAINTAIN MINIMUM - 6" (150 mm) SPACING BETWEEN THE CHAMBER ROWS.
7. EMBEDMENT STONE SURROUNDING CHAMBERS MUST BE A CLEAN, CRUSHED, ANGULAR STONE 3/4-2" (20-50 mm).
8. THE CONTRACTOR MUST REPORT ANY DISCREPANCIES WITH CHAMBER FOUNDATION MATERIALS BEARING CAPACITIES TO THE SITE DESIGN ENGINEER.
9. ADS RECOMMENDS THE USE OF "FLEXSTORM CATCH IT" INSERTS DURING CONSTRUCTION FOR ALL INLETS TO PROTECT THE SUBSURFACE STORMWATER MANAGEMENT SYSTEM FROM CONSTRUCTION SITE RUNOFF.

NOTES FOR CONSTRUCTION EQUIPMENT

1. STORMTECH SC-310 & SC-740 CHAMBERS SHALL BE INSTALLED IN ACCORDANCE WITH THE "STORMTECH SC-310/SC-740/DC-780 CONSTRUCTION GUIDE".
2. THE USE OF CONSTRUCTION EQUIPMENT OVER SC-310 & SC-740 CHAMBERS IS LIMITED:
   - NO EQUIPMENT IS ALLOWED ON BARE CHAMBERS.
   - NO RUBBER TIRED LOADERS, DUMP TRUCKS, OR EXCAVATORS ARE ALLOWED UNTIL PROPER FILL DEPTHS ARE REACHED IN ACCORDANCE WITH THE "STORMTECH SC-310/SC-740/DC-780 CONSTRUCTION GUIDE".
   - WEIGHT LIMITS FOR CONSTRUCTION EQUIPMENT CAN BE FOUND IN THE "STORMTECH SC-310/SC-740/DC-780 CONSTRUCTION GUIDE".
3. FULL 36" (900 mm) OF STABILIZED COVER MATERIALS OVER THE CHAMBERS IS REQUIRED FOR DUMP TRUCK TRAVEL OR DUMPING.

USE OF A DOZER TO PUSH EMBEDMENT STONE BETWEEN THE ROWS OF CHAMBERS MAY CAUSE DAMAGE TO THE CHAMBERS AND IS NOT AN ACCEPTABLE BACKFILL METHOD. ANY CHAMBERS DAMAGED BY THE "DUMP AND PUSH" METHOD ARE NOT COVERED UNDER THE STORMTECH STANDARD WARRANTY.

CONTACT STORMTECH AT 1-888-892-2694 WITH ANY QUESTIONS ON INSTALLATION REQUIREMENTS OR WEIGHT LIMITS FOR CONSTRUCTION EQUIPMENT.

©2016 ADS, INC.

CONCEPTUAL LAYOUT

(148) STORMTECH SC-740 CHAMBERS
(8) STORMTECH SC-740 END CAPS
INSTALLED WITH 21 " COVER STONE, 6 " BASE STONE, 36% STONE VOID
INSTALLED SYSTEM VOLUME: 12906 CF
AREA OF SYSTEM: 5552 **FT²**
PERIMETER OF SYSTEM: 583 **FT**

COMPUTER GENERATED CONCEPTUAL LAYOUT - NOT FOR CONSTRUCTION

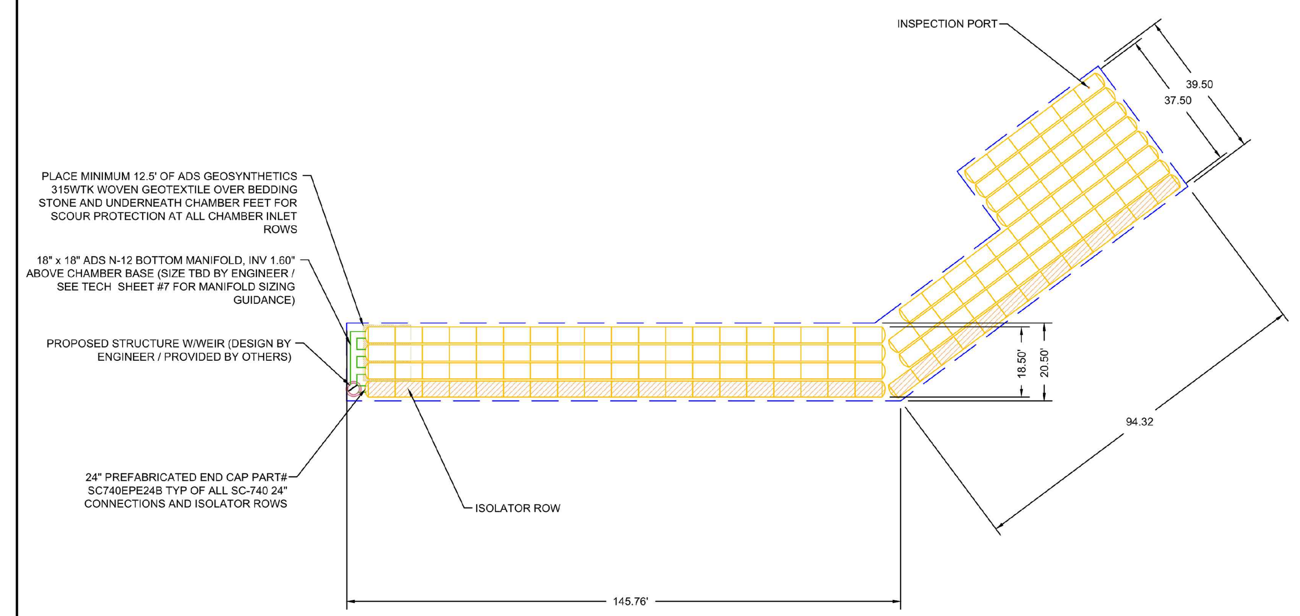

NOT TO SCALE

ACCEPTABLE FILL MATERIALS: STORMTECH SC-740 CHAMBER SYSTEMS

MATERIAL LOCATION		DESCRIPTION	AASHTO MATERIAL CLASSIFICATIONS	COMPACTION / DENSITY REQUIREMENT
D	**FINAL FILL:** FILL MATERIAL FOR LAYER 'D' STARTS FROM THE TOP OF THE 'C' LAYER TO THE BOTTOM OF FLEXIBLE PAVEMENT OR UNPAVED FINISHED GRADE ABOVE. NOTE THAT PAVEMENT SUBBASE MAY BE PART OF THE 'D' LAYER	ANY SOIL/ROCK MATERIALS, NATIVE SOILS, OR PER ENGINEER'S PLANS. CHECK PLANS FOR PAVEMENT SUBGRADE REQUIREMENTS.	N/A	PREPARE PER SITE DESIGN ENGINEER'S PLANS. PAVED INSTALLATIONS MAY HAVE STRINGENT MATERIAL AND PREPARATION REQUIREMENTS.
C	**INITIAL FILL:** FILL MATERIAL FOR LAYER 'C' STARTS FROM THE TOP OF THE EMBEDMENT STONE ('B' LAYER) TO 18" (450 mm) ABOVE THE TOP OF THE CHAMBER. NOTE THAT PAVEMENT SUBBASE MAY BE A PART OF THE 'C' LAYER.	GRANULAR WELL-GRADED SOIL/AGGREGATE MIXTURES, <35% FINES OR PROCESSED AGGREGATE. MOST PAVEMENT SUBBASE MATERIALS CAN BE USED IN LIEU OF THIS LAYER.	AASHTO M145[1] A-1, A-2-4, A-3 OR AASHTO M43[1] 3, 357, 4, 467, 5, 56, 57, 6, 67, 68, 7, 78, 8, 89, 9, 10	BEGIN COMPACTIONS AFTER 12" (300 mm) OF MATERIAL OVER THE CHAMBERS IS REACHED. COMPACT ADDITIONAL LAYERS IN 6" (150 mm) MAX LIFTS TO A MIN. 95% PROCTOR DENSITY FOR WELL GRADED MATERIAL AND 95% RELATIVE DENSITY FOR PROCESSED AGGREGATE MATERIALS. ROLLER GROSS VEHICLE WEIGHT NOT TO EXCEED 12,000 lbs (53 kN). DYNAMIC FORCE NOT TO EXCEED 20,000 lbs (89 kN).
B	**EMBEDMENT STONE:** FILL SURROUNDING THE CHAMBERS FROM THE FOUNDATION STONE ('A' LAYER) TO THE 'C' LAYER ABOVE.	CLEAN, CRUSHED, ANGULAR STONE, NOMINAL SIZE DISTRIBUTION BETWEEN 3/4-2 INCH (20-50 mm)	AASHTO M43[1] 3, 357, 4, 467, 5, 56, 57	NO COMPACTION REQUIRED.
A	**FOUNDATION STONE:** FILL BELOW CHAMBERS FROM THE SUBGRADE UP TO THE FOOT (BOTTOM) OF THE CHAMBER.	CLEAN, CRUSHED, ANGULAR STONE, NOMINAL SIZE DISTRIBUTION BETWEEN 3/4-2 INCH (20-50 mm)	AASHTO M43[1] 3, 357, 4, 467, 5, 56, 57	PLATE COMPACT OR ROLL TO ACHIEVE A FLAT SURFACE. [2,3]

PLEASE NOTE:
1. THE LISTED AASHTO DESIGNATIONS ARE FOR GRADATIONS ONLY. THE STONE MUST ALSO BE CLEAN, CRUSHED, ANGULAR. FOR EXAMPLE, A SPECIFICATION FOR #4 STONE WOULD STATE: "CLEAN, CRUSHED, ANGULAR NO. 4 (AASHTO M43) STONE".
2. STORMTECH COMPACTION REQUIREMENTS ARE MET FOR 'A' LOCATION MATERIALS WHEN PLACED AND COMPACTED IN 6" (150 mm) (MAX) LIFTS USING TWO FULL COVERAGES WITH A VIBRATORY COMPACTOR.
3. WHERE INFILTRATION SURFACES MAY BE COMPROMISED BY COMPACTION, FOR STANDARD DESIGN LOAD CONDITIONS, A FLAT SURFACE MAY BE ACHIEVED BY RAKING OR DRAGGING WITHOUT COMPACTION EQUIPMENT. FOR SPECIAL LOAD DESIGNS, CONTACT STORMTECH FOR COMPACTION REQUIREMENTS.

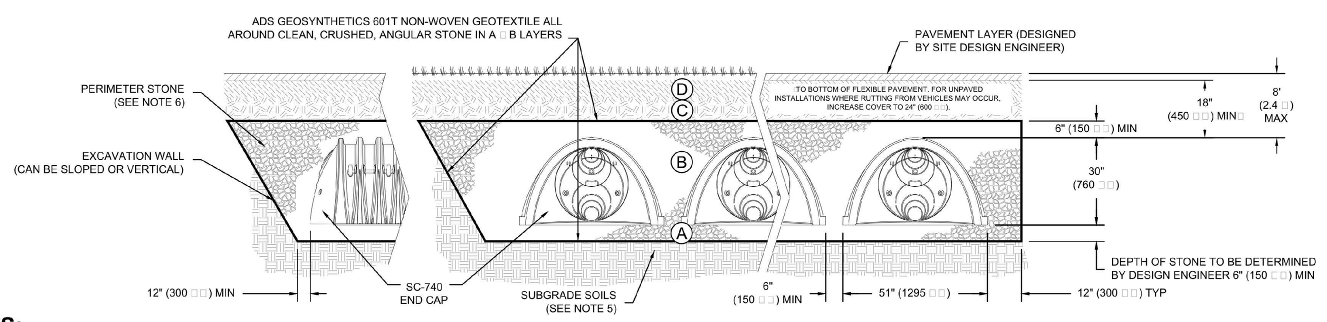

NOTES:

1. SC-740 CHAMBERS SHALL CONFORM TO THE REQUIREMENTS OF ASTM F2418 "STANDARD SPECIFICATION FOR POLYPROPYLENE (PP) CORRUGATED WALL STORMWATER COLLECTION CHAMBERS", OR ASTM F2922 "STANDARD SPECIFICATION FOR POLYETHYLENE (PE) CORRUGATED WALL STORMWATER COLLECTION CHAMBERS".
2. SC-740 CHAMBERS SHALL BE DESIGNED IN ACCORDANCE WITH ASTM F2787 "STANDARD PRACTICE FOR STRUCTURAL DESIGN OF THERMOPLASTIC CORRUGATED WALL STORMWATER COLLECTION CHAMBERS".
3. "ACCEPTABLE FILL MATERIALS" TABLE ABOVE PROVIDES MATERIAL LOCATIONS, DESCRIPTIONS, GRADATIONS, AND COMPACTION REQUIREMENTS FOR FOUNDATION, EMBEDMENT, AND FILL MATERIALS.
4. THE "SITE DESIGN ENGINEER" REFERS TO THE ENGINEER RESPONSIBLE FOR THE DESIGN AND LAYOUT OF THE STORMTECH CHAMBERS FOR THIS PROJECT.
5. THE SITE DESIGN ENGINEER IS RESPONSIBLE FOR ASSESSING THE BEARING RESISTANCE (ALLOWABLE BEARING CAPACITY) OF THE SUBGRADE SOILS AND THE DEPTH OF FOUNDATION STONE WITH CONSIDERATION FOR THE RANGE OF EXPECTED SOIL MOISTURE CONDITIONS.
6. PERIMETER STONE MUST BE EXTENDED HORIZONTALLY TO THE EXCAVATION WALL FOR BOTH VERTICAL AND SLOPED EXCAVATION WALLS.
7. ONCE LAYER 'C' IS PLACED, ANY SOIL/MATERIAL CAN BE PLACED IN LAYER 'D' UP TO THE FINISHED GRADE. MOST PAVEMENT SUBBASE SOILS CAN BE USED TO REPLACE THE MATERIAL REQUIREMENTS OF LAYER 'C' OR 'D' AT THE SITE DESIGN ENGINEER'S DISCRETION.

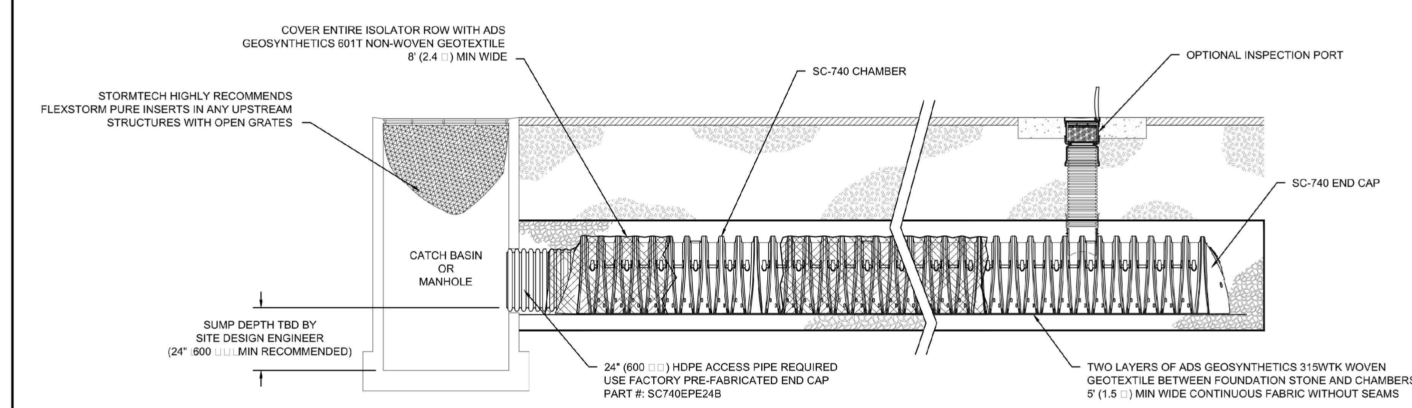

SC-740 ISOLATOR ROW DETAIL
NTS

INSPECTION & MAINTENANCE

STEP 1) INSPECT ISOLATOR ROW FOR SEDIMENT
- A. INSPECTION PORTS (IF PRESENT)
  - A.1. REMOVE/OPEN LID ON NYLOPLAST INLINE DRAIN
  - A.2. REMOVE AND CLEAN FLEXSTORM FILTER IF INSTALLED
  - A.3. USING A FLASHLIGHT AND STADIA ROD, MEASURE DEPTH OF SEDIMENT AND RECORD ON MAINTENANCE LOG
  - A.4. LOWER A CAMERA INTO ISOLATOR ROW FOR VISUAL INSPECTION OF SEDIMENT LEVELS (OPTIONAL)
  - A.5. IF SEDIMENT IS AT, OR ABOVE, 3" (80 mm) PROCEED TO STEP 2. IF NOT, PROCEED TO STEP 3.
- B. ALL ISOLATOR ROWS
  - B.1. REMOVE COVER FROM STRUCTURE AT UPSTREAM END OF ISOLATOR ROW
  - B.2. USING A FLASHLIGHT, INSPECT DOWN THE ISOLATOR ROW THROUGH OUTLET PIPE
    - i) MIRRORS ON POLES OR CAMERAS MAY BE USED TO AVOID A CONFINED SPACE ENTRY
    - ii) FOLLOW OSHA REGULATIONS FOR CONFINED SPACE ENTRY IF ENTERING MANHOLE
  - B.3. IF SEDIMENT IS AT, OR ABOVE, 3" (80 mm) PROCEED TO STEP 2. IF NOT, PROCEED TO STEP 3.

STEP 2) CLEAN OUT ISOLATOR ROW USING THE JETVAC PROCESS
- A. A FIXED CULVERT CLEANING NOZZLE WITH REAR FACING SPREAD OF 45" (1.1 m) OR MORE IS PREFERRED
- B. APPLY MULTIPLE PASSES OF JETVAC UNTIL BACKFLUSH WATER IS CLEAN
- C. VACUUM STRUCTURE SUMP AS REQUIRED

STEP 3) REPLACE ALL COVERS, GRATES, FILTERS, AND LIDS; RECORD OBSERVATIONS AND ACTIONS.

STEP 4) INSPECT AND CLEAN BASINS AND MANHOLES UPSTREAM OF THE STORMTECH SYSTEM.

NOTES

1. INSPECT EVERY 6 MONTHS DURING THE FIRST YEAR OF OPERATION. ADJUST THE INSPECTION INTERVAL BASED ON PREVIOUS OBSERVATIONS OF SEDIMENT ACCUMULATION AND HIGH WATER ELEVATIONS.
2. CONDUCT JETTING AND VACTORING ANNUALLY OR WHEN INSPECTION SHOWS THAT MAINTENANCE IS NECESSARY.

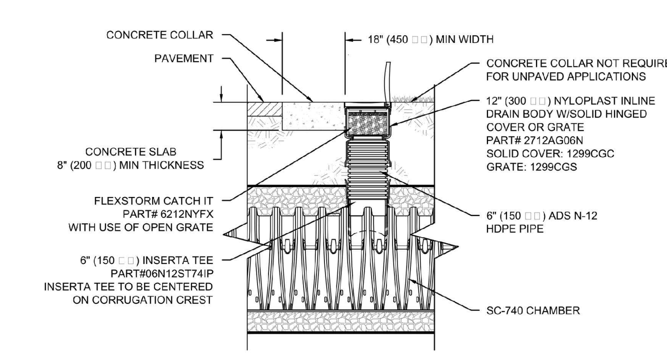

SC-740 6" INSPECTION PORT DETAIL
NTS

INTENTIONALLY LEFT BLANK

INSERTA TEE DETAIL
NTS

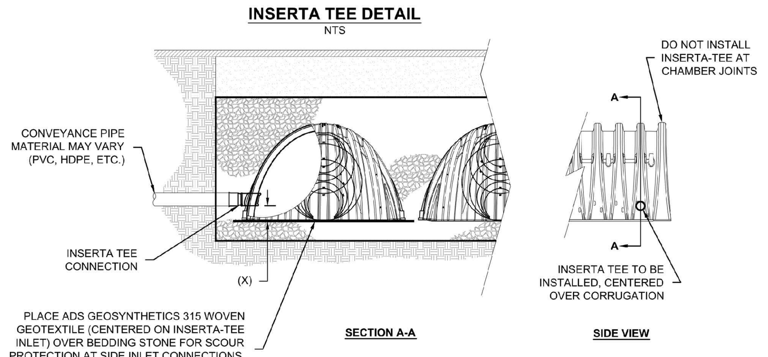

CHAMBER	MAX DIAMETER OF INSERTA TEE	HEIGHT FROM BASE OF CHAMBER (X)
SC-310	6" (150 mm)	4" (100 mm)
SC-740	10" (250 mm)	4" (100 mm)
DC-780	10" (250 mm)	4" (100 mm)
MC-3500	12" (300 mm)	6" (150 mm)
MC-4500	12" (300 mm)	8" (200 mm)
INSERTA TEE FITTINGS AVAILABLE FOR SDR 26, SDR 35, SCH 40 IPS GASKETED & SOLVENT WELD, N-12, HP STORM, C-900 OR DUCTILE IRON		

NOTE:
PART NUMBERS WILL VARY BASED ON INLET PIPE MATERIALS. CONTACT STORMTECH FOR MORE INFORMATION.

SC-740 TECHNICAL SPECIFICATION
NTS

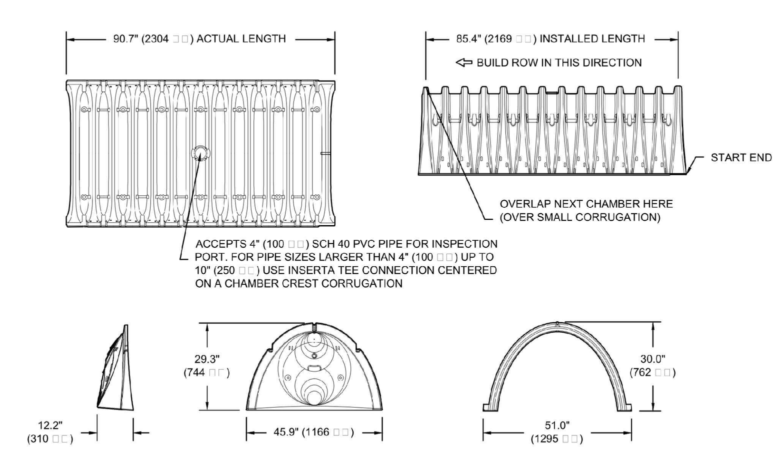

NOMINAL CHAMBER SPECIFICATIONS

SIZE (W X H X INSTALLED LENGTH)	51.0" X 30.0" X 85.4"	(1295 mm X 762 mm X 2169 mm)
CHAMBER STORAGE	45.9 CUBIC FEET	(1.30 m³)
MINIMUM INSTALLED STORAGE*	74.9 CUBIC FEET	(2.12 m³)
WEIGHT	75.0 lbs.	(33.6 kg)

*ASSUMES 6" (152 mm) STONE ABOVE, BELOW, AND BETWEEN CHAMBERS

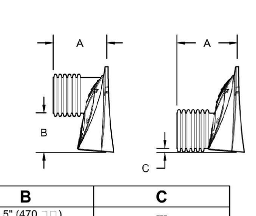

STUBS AT BOTTOM OF END CAP FOR PART NUMBERS ENDING WITH "B"
STUBS AT TOP OF END CAP FOR PART NUMBERS ENDING WITH "T"

PART #	STUB	A	B	C
SC740EPE06T / SC740EPE06TPC	6" (150 mm)	10.9" (277 mm)	18.5" (470 mm)	---
SC740EPE06B / SC740EPE06BPC			---	0.5" (13 mm)
SC740EPE08T /SC740EPE08TPC	8" (200 mm)	12.2" (310 mm)	16.5" (419 mm)	---
SC740EPE08B / SC740EPE08BPC			---	0.6" (15 mm)
SC740EPE10T / SC740EPE10TPC	10" (250 mm)	13.4" (340 mm)	14.5" (368 mm)	---
SC740EPE10B / SC740EPE10BPC			---	0.7" (18 mm)
SC740EPE12T / SC740EPE12TPC	12" (300 mm)	14.7" (373 mm)	12.5" (318 mm)	---
SC740EPE12B / SC740EPE12BPC			---	1.2" (30 mm)
SC740EPE15T / SC740EPE15TPC	15" (375 mm)	18.4" (467 mm)	9.0" (229 mm)	---
SC740EPE15B / SC740EPE15BPC			---	1.3" (33 mm)
SC740EPE18T / SC740EPE18TPC	18" (450 mm)	19.7" (500 mm)	5.0" (127 mm)	---
SC740EPE18B / SC740EPE18BPC			---	1.6" (41 mm)
SC740EPE24B*	24" (600 mm)	18.5" (470 mm)	---	0.1" (3 mm)

ALL STUBS, EXCEPT FOR THE SC740EPE24B ARE PLACED AT BOTTOM OF END CAP SUCH THAT THE OUTSIDE DIAMETER OF THE STUB IS FLUSH WITH THE BOTTOM OF THE END CAP. FOR ADDITIONAL INFORMATION CONTACT STORMTECH AT 1-888-892-2694.

*FOR THE SC740EPE24B THE 24" (600 mm) STUB LIES BELOW THE BOTTOM OF THE END CAP APPROXIMATELY 1.75" (44 mm). BACKFILL MATERIAL SHOULD BE REMOVED FROM BELOW THE N-12 STUB SO THAT THE FITTING SITS LEVEL.

NOTE: ALL DIMENSIONS ARE NOMINAL

REV	DRW	CHK	DESCRIPTION

Northgate Crossing, Ph 3
Wheeling, IL
DATE: 05/16/2016 DRAWN: DW
PROJECT #: Tool CHECKED: ---

StormTech
Detention • Retention • Water Quality
70 INWOOD ROAD, SUITE 3 | ROCKY HILL | CT | 06067
860-529-8188 | 888-892-2694 | WWW.STORMTECH.COM

ADS ADVANCED DRAINAGE SYSTEMS, INC.
4640 TRUEMAN BLVD
HILLIARD, OH 43026
1-800-733-7473

THIS DRAWING HAS BEEN PREPARED BASED ON INFORMATION PROVIDED TO ADS UNDER THE DIRECTION OF THE SITE DESIGN ENGINEER OR OTHER PROJECT REPRESENTATIVE. THE SITE DESIGN ENGINEER SHALL REVIEW THIS DRAWING PRIOR TO CONSTRUCTION. IT IS THE ULTIMATE RESPONSIBILITY OF THE SITE DESIGN ENGINEER TO ENSURE THAT THE PRODUCT(S) DEPICTED AND ALL ASSOCIATED DETAILS MEET ALL APPLICABLE LAWS, REGULATIONS, AND PROJECT REQUIREMENTS.

SHEET 2 OF 5 / SHEET 3 OF 5 / SHEET 4 OF 5 / SHEET 5 OF 5

DATE	REVISIONS	DRAWN BY

Manhard CONSULTING LTD
900 Woodlands Parkway, Vernon Hills, IL 60061 ph:847.634.5550 fx:847.634.0095 manhard.com
Civil Engineers • Surveyors • Water Resource Engineers • Water & Wastewater Engineers
Construction Managers • Environmental Scientists • Landscape Architects • Planners

NORTHGATE CROSSING - PHASE 3
WHEELING, COOK COUNTY, ILLINOIS
ADS DETAILS

Exhibit received May 17, 2016

PROJ. MGR.: JDF
PROJ. ASSOC.: DAM
DRAWN BY: ----
DATE: 05-17-16
SCALE: N.T.S.

SHEET 13 OF 13
KNZWH

PENDING APPROVAL - NOT FOR CONSTRUCTION

© 2015 MANHARD CONSULTING, LTD. ALL RIGHTS RESERVED

May 17, 2016 - 15:48 Dwg Name: P:\Knzwh\dwg\Eng\Final Drawings\Plan Set\13 ADS DETAILS.dwg Updated By: skolev

Front Elevation

SCALE: 3/16"=1'-0"

Right Elevation

SCALE: 3/16"=1'-0"

Character Elevations - Building 1

Northgate Crossing - Townhouses

Wheeling, IL

REVA DEVELOPMENT PARTNERS LLC

bsbdesign.com

The drawings presented are illustrative of character and design intent only, and are subject to change based upon final design considerations (i.e. applicable codes, structural, and MEP design requirements, unit plan / floor plan changes, etc.)

Exhibit received April 14, 2016

04-15-2016

© 2016 BSB Design, Inc.

BSB DESIGN

Rear Elevation

SCALE: 3/16"=1'-0"

Left Elevation

SCALE: 3/16"=1'-0"

Character Elevations - Building 1

Northgate Crossing - Townhouses

Wheeling, IL

REVA DEVELOPMENT PARTNERS LLC

bsbdesign.com

The drawings presented are illustrative of character and design intent only, and are subject to change based upon final design considerations (i.e. applicable codes, structural, and MEP design requirements, unit plan / floor plan changes, etc.)

Exhibit received April 14, 2016

04-15-2016

© 2016 BSB Design, Inc.

BSB DESIGN

Front Elevation

SCALE: 3/16"=1'-0"

Right Elevation

SCALE: 3/16"=1'-0"

Character Elevations - Building 2

Northgate Crossing - Townhouses

Wheeling, IL

REVA DEVELOPMENT PARTNERS LLC

bsbdesign.com

The drawings presented are illustrative of character and design intent only, and are subject to change based upon final design considerations (i.e. applicable codes, structural, and MEP design requirements, unit plan / floor plan changes, etc.)

Exhibit received April 14, 2016

04-15-2016

© 2016 BSB Design, Inc.

BSB DESIGN

Rear Elevation

SCALE: 3/16"=1'-0"

Left Elevation

SCALE: 3/16"=1'-0"

Character Elevations - Building 2

Northgate Crossing - Townhouses

Wheeling, IL

REVA DEVELOPMENT PARTNERS LLC

bsbdesign.com

The drawings presented are illustrative of character and design intent only, and are subject to change based upon final design considerations (i.e. applicable codes, structural, and MEP design requirements, unit plan / floor plan changes, etc.)

Exhibit received April 14, 2016

04-15-2016

© 2016 BSB Design, Inc.

BSB DESIGN

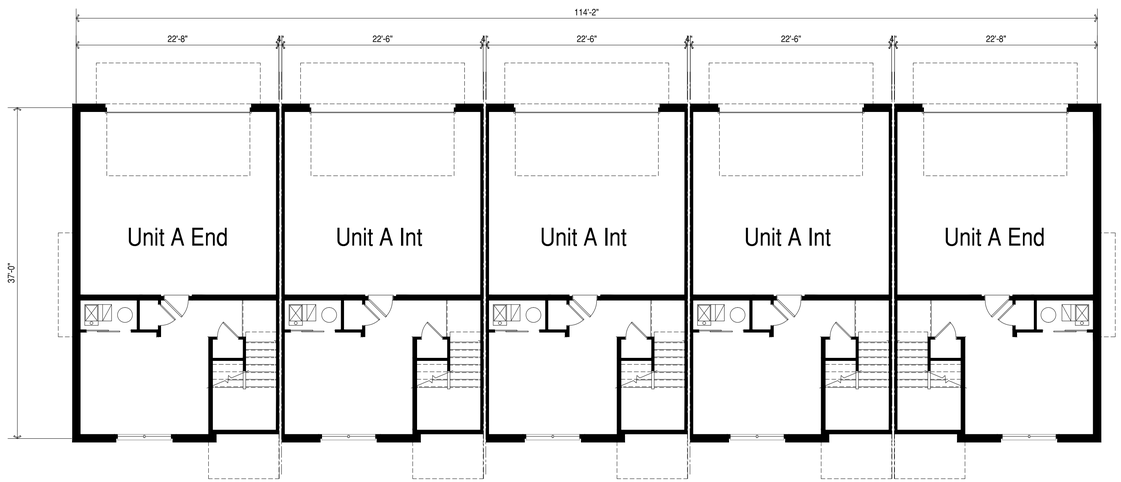

5 Unit Assembly

scale: 1/8" = 1'-0"

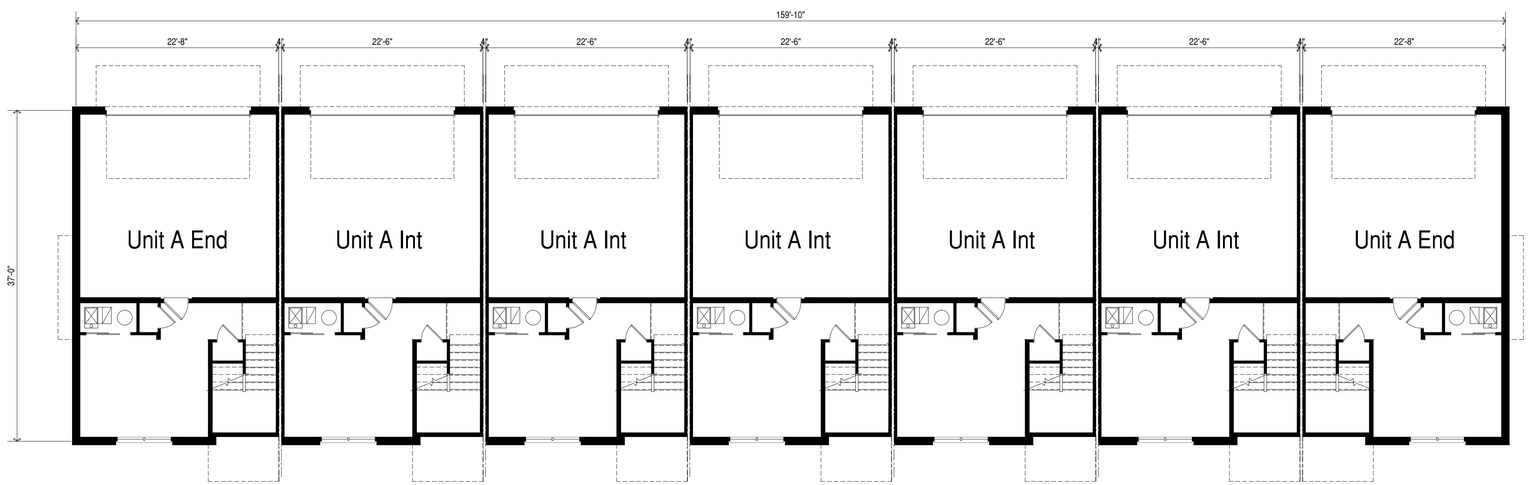

7 Unit Assembly

scale: 1/8" = 1'-0"

Exhibit received April 14, 2016

Lower Floor Assembly Plans

Northgate Crossing - Apartments

Wheeling, IL

REVA DEVELOPMENT PARTNERS LLC

bsbdesign.com

11-20-2015

© 2015 BSB Design, Inc.

BSB DESIGN

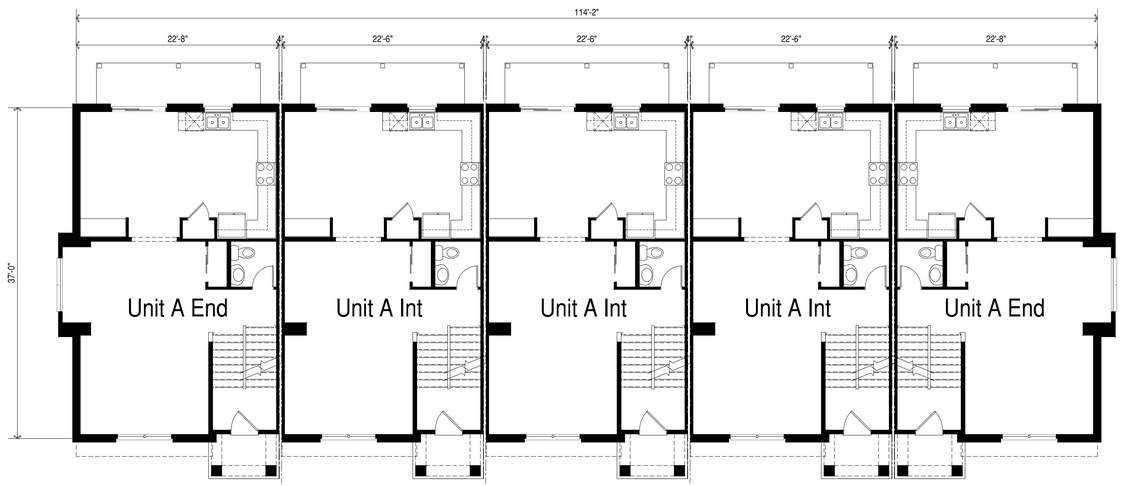

5 Unit Assembly

scale: 1/8" = 1'-0"

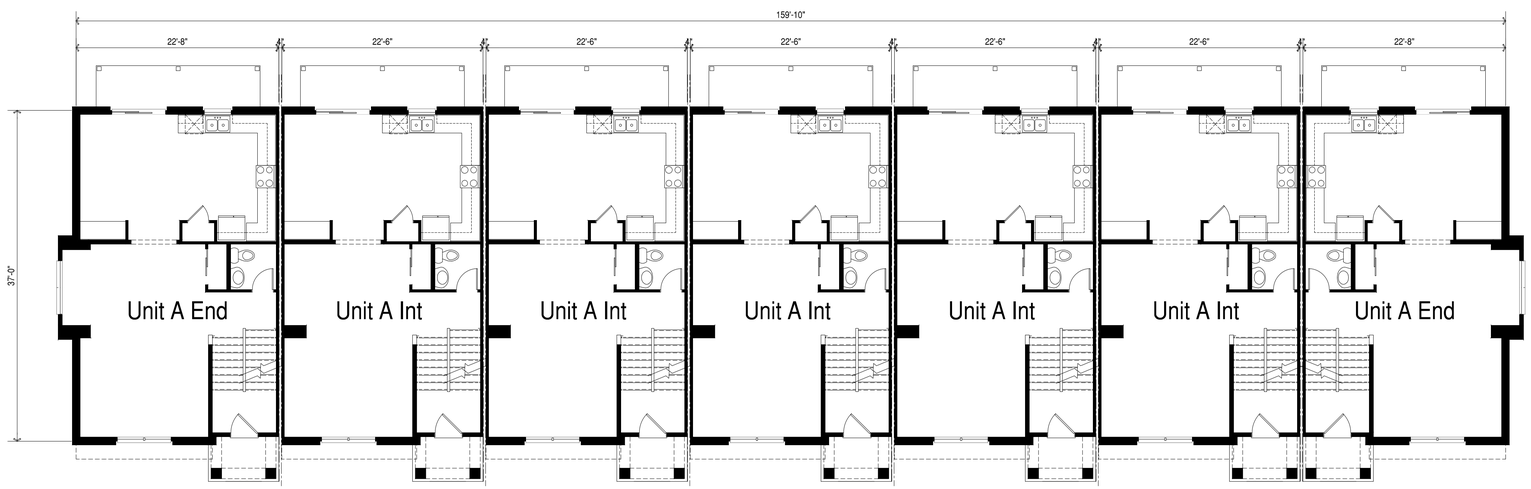

7 Unit Assembly

scale: 1/8" = 1'-0"

Exhibit received April 14, 2016

Main Floor Assembly Plans

Northgate Crossing - Apartments

Wheeling, IL

REVA DEVELOPMENT PARTNERS LLC

bsbdesign.com

11-20-2015

© 2015 BSB Design, Inc.

BSB DESIGN

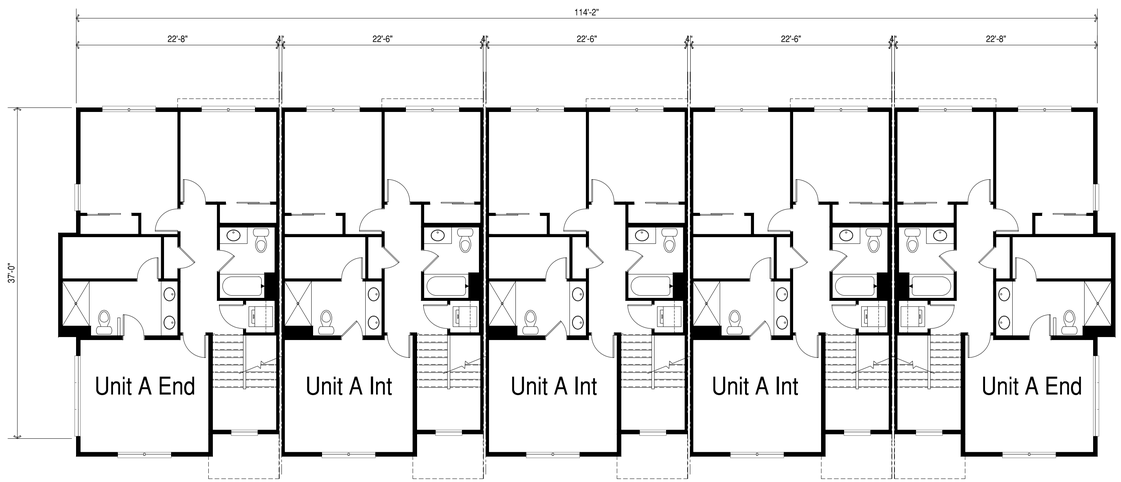

5 Unit Assembly

scale: 1/8" = 1'-0"

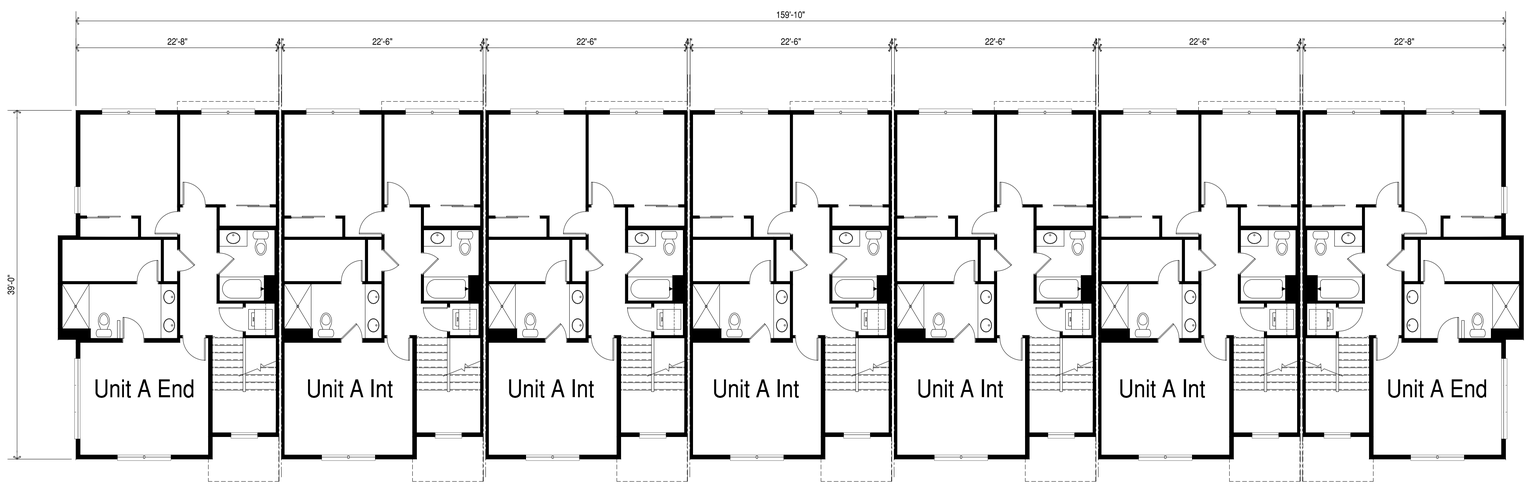

7 Unit Assembly

scale: 1/8" = 1'-0"

Exhibit received April 14, 2016

Upper Floor Assembly Plans

Northgate Crossing - Apartments

Wheeling, IL

REVA DEVELOPMENT PARTNERS LLC

bsbdesign.com

11-20-2015

© 2015 BSB Design, Inc.

BSB DESIGN

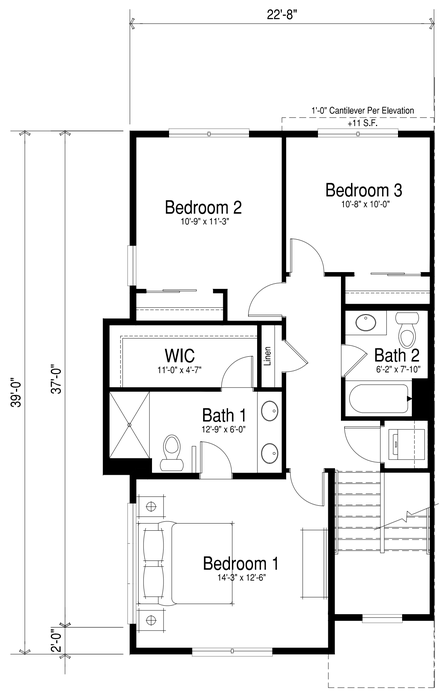

Upper Floor Plan

scale: 3/16" = 1'-0"

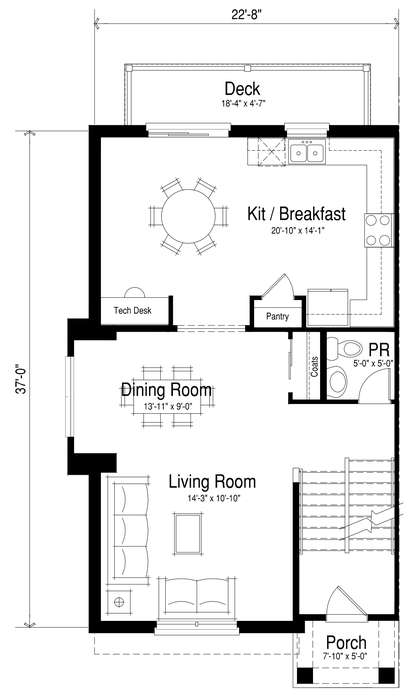

Main Floor Plan

scale: 3/16" = 1'-0"

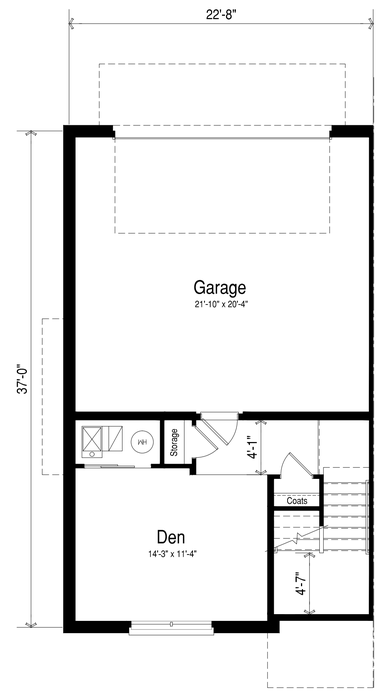

Lower Floor Plan

scale: 3/16" = 1'-0"

Exhibit received April 14, 2016

Unit A: End Condition - 2029 S.F.

Northgate Crossing - Apartments

Wheeling, IL

REVA DEVELOPMENT PARTNERS LLC

bsbdesign.com

[illegible]

11-20-2015

© 2015 BSB Design, Inc.

BSB DESIGN

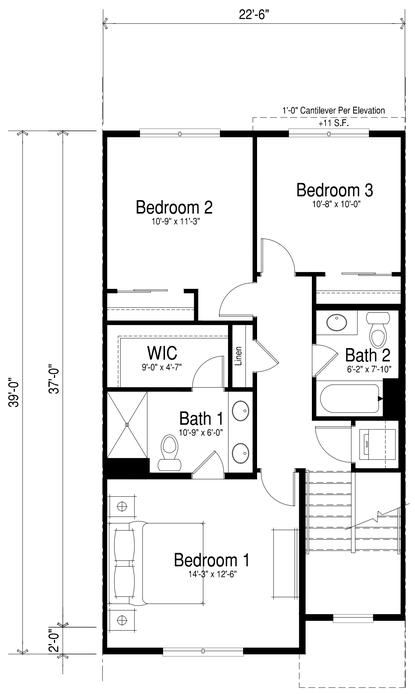

Upper Floor Plan

scale: 3/16" = 1'-0"

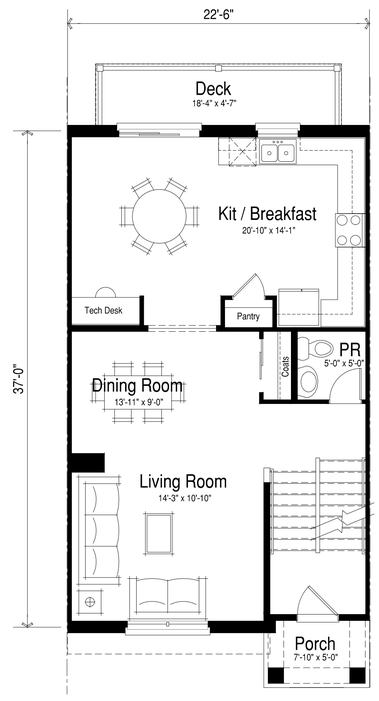

Main Floor Plan

scale: 3/16" = 1'-0"

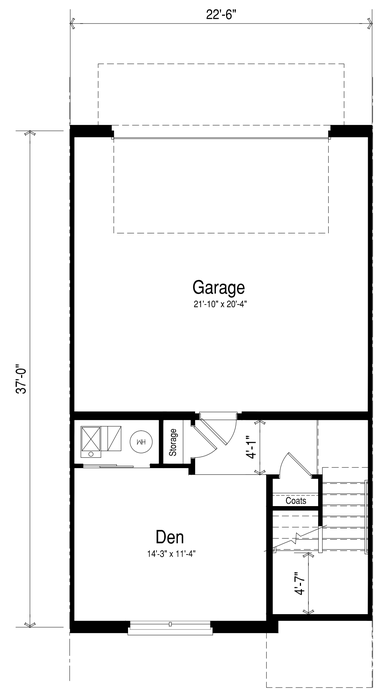

Lower Floor Plan

scale: 3/16" = 1'-0"

Exhibit received April 14, 2016

Unit A: Interior Condition - 1971 S.F.

Northgate Crossing - Apartments

Wheeling, IL

REVA DEVELOPMENT PARTNERS LLC

bsbdesign.com

11-20-2015

© 2015 BSB Design, Inc.

BSB DESIGN

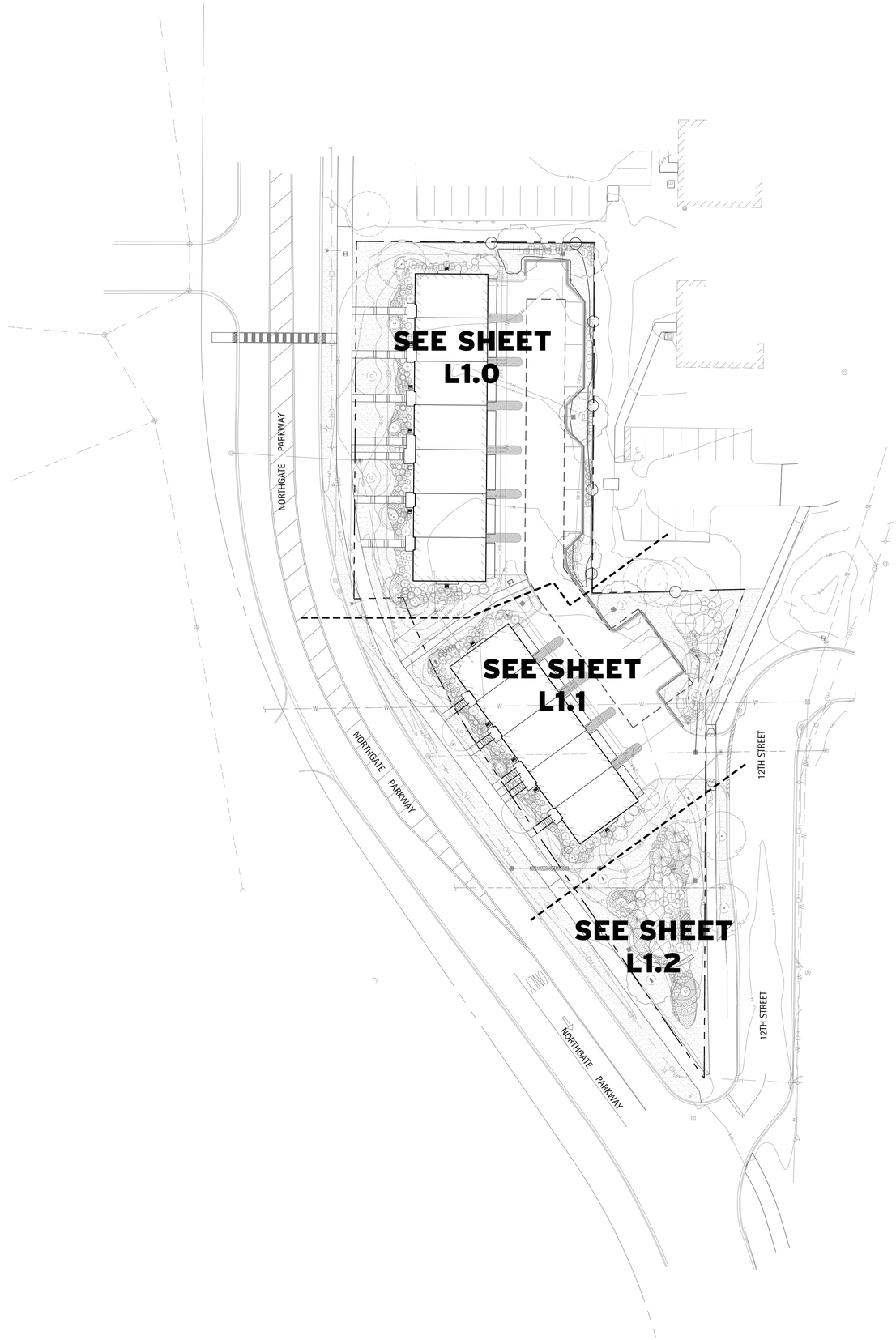

THE LAKOTA GROUP.

116 West Illinois Street
Floor 7
Chicago, Illinois 60654
p 312.467.5445
f 312.467.5484
thelakotagroup.com

PREPARED FOR
REVA Development Partners
116 W Illinois St, 7th Floor
Chicago, IL 60654

PROJECT
Northgate Townhomes
Wheeling, IL

Exhibit received May 17, 2016

ISSUED
April 14, 2016

REVISIONS

No	Date	Issue
01	20160318	Issue for Review
02	20160414	Issue for Permit
03	20160517	Final PUD Set

CHECKED BY
SF

DRAWN BY
JS

SHEET TITLE
Key Plan

SCALE IN FEET
1" = 30'

0' 15' 30' 90'

NORTH

SHEET NUMBER
L0.0

© 2016 The Lakota Group

H:\CAD_files\2015\15022 - Northgate Townhomes\15022 - Master Plan\15022-KEYPLAN-L0.0.dwg

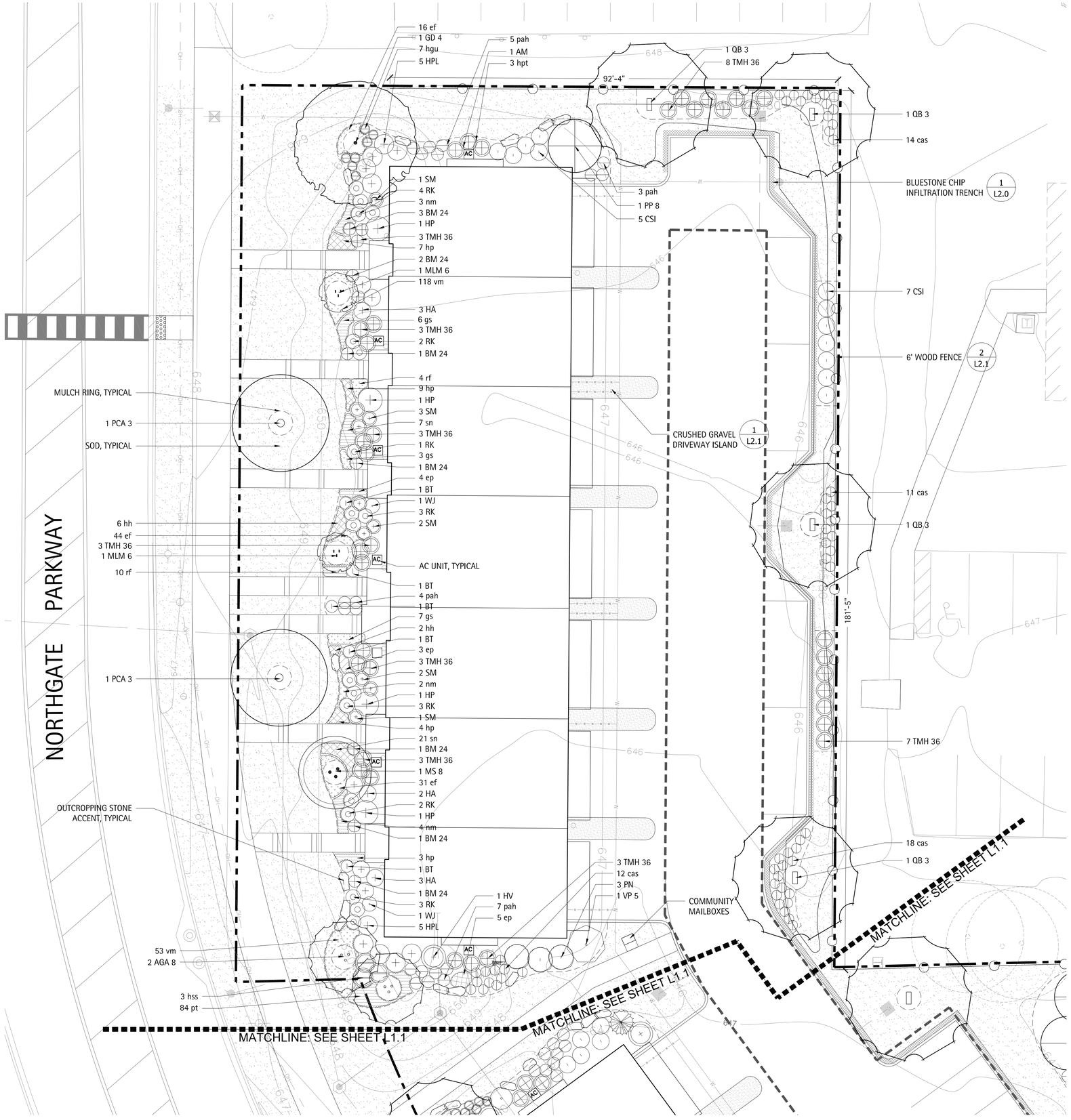

LEGEND

- EXISTING TREE
- DECIDUOUS SHADE TREE 3"-6" CAL.
- MULTI-STEM ORNAMENTAL TREE 8'-10' HT.
- EVERGREEN TREE 8'-12' HT
- EVERGREEN SHRUB 24-30", 36-42"
- UPRIGHT EVERGREEN SHRUB 6-8' HT
- DECIDUOUS SHRUB 24-48"
- LARGE DECIDUOUS SHRUB 4-6' HT
- ORNAMENTAL GRASS
- PERENNIALS/GROUNDCOVER
- SOD

NOTE:
LANDSCAPE TO BE IRRIGATED PER CODE

THE LAKOTA GROUP.

116 West Illinois Street
Floor 7
Chicago, Illinois 60654
p 312.467.5445
f 312.467.5484
thelakotagroup.com

PREPARED FOR
REVA Development Partners
116 W Illinois St, 7th Floor
Chicago, IL 60654

PROJECT
Northgate Townhomes
Wheeling, IL

Exhibit received May 17, 2016

ISSUED
April 14, 2016

REVISIONS

No	Date	Issue
01	20160318	Issue for Review
02	20160414	Issue for Permit
03	20160517	Final PUD Set

CHECKED BY SF
DRAWN BY JS

SHEET TITLE
Landscape Plan

SCALE IN FEET
1" = 10'
0' 5' 10' 30'

NORTH

SHEET NUMBER
L1.0

©2016 The Lakota Group

H:\CAD_files\2015\15022 - Northgate Townhomes\15022 - Master Plan\15022-LNDSCPPLAN-L1.0.dwg

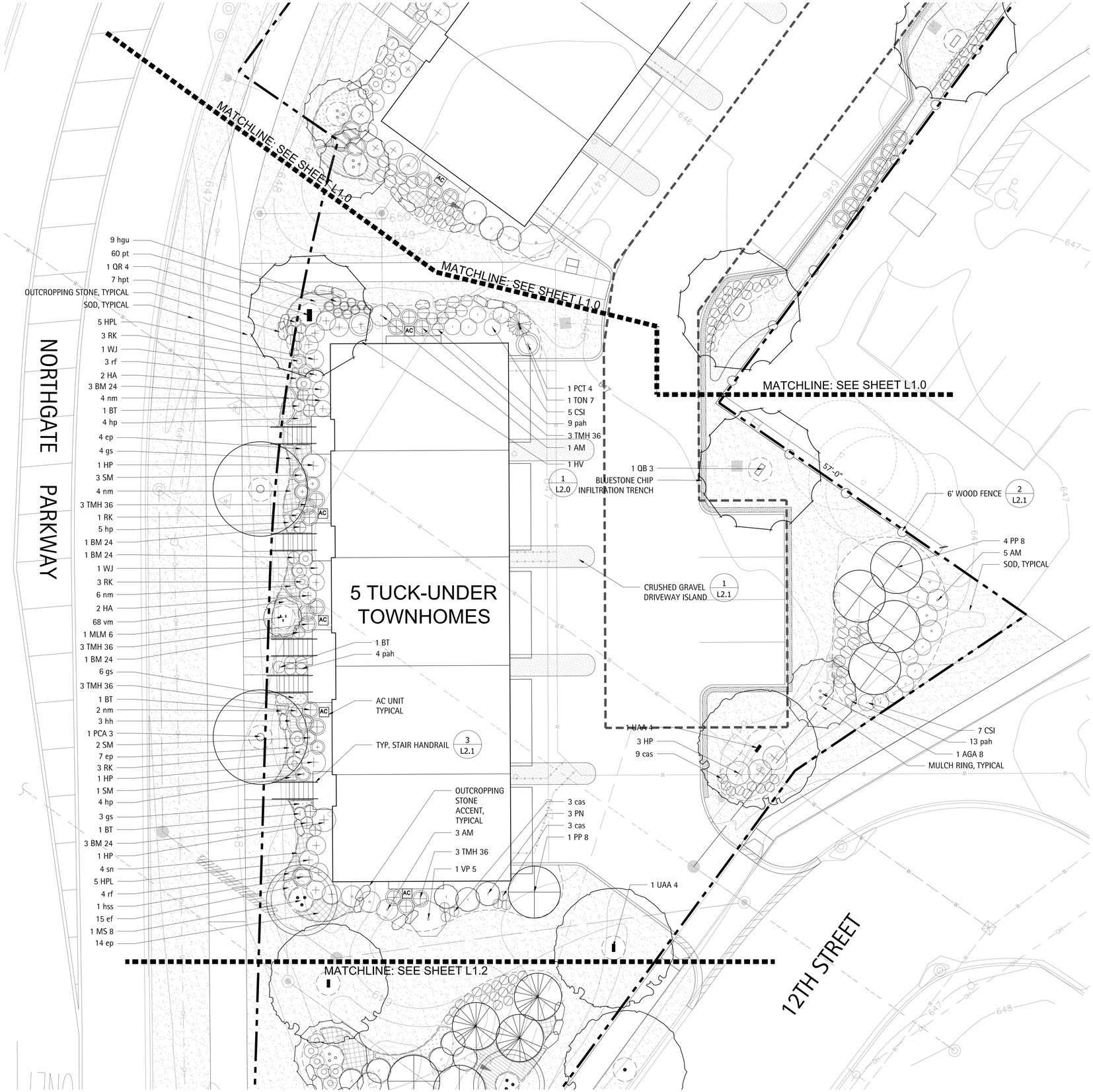

LEGEND

- EXISTING TREE
- DECIDUOUS SHADE TREE 3"-6" CAL.
- MULTI-STEM ORNAMENTAL TREE 8'-10' HT.
- EVERGREEN TREE 8'-12' HT
- EVERGREEN SHRUB 24-30", 36-42"
- UPRIGHT EVERGREEN SHRUB 6-8' HT
- DECIDUOUS SHRUB 24-48"
- LARGE DECIDUOUS SHRUB 4-6' HT
- ORNAMENTAL GRASS
- PERENNIALS/GROUNDCOVER
- SOD

NOTE:
LANDSCAPE TO BE IRRIGATED PER CODE

THE LAKOTA GROUP.

116 West Illinois Street
Floor 7
Chicago, Illinois 60654
p 312.467.5445
f 312.467.5484
thelakotagroup.com

PREPARED FOR
REVA Development Partners
116 W Illinois St, 7th Floor
Chicago, IL 60654

PROJECT
Northgate Townhomes
Wheeling, IL

Exhibit received May 17, 2016

ISSUED
April 14, 2016

REVISIONS

No	Date	Issue
01	20160318	Issue for Review
02	20160414	Issue for Permit
03	20160517	Final PUD Set

CHECKED BY SF
DRAWN BY JS

SHEET TITLE
Landscape Plan

SCALE IN FEET
1" = 10'
0' 5' 10' 30'

NORTH

SHEET NUMBER
L1.1

© 2016 The Lakota Group

H:\CAD_files\2015\15022 - Northgate Townhomes\15022 - Master Plan\15022-LNDSCPPLAN-L1.0.dwg

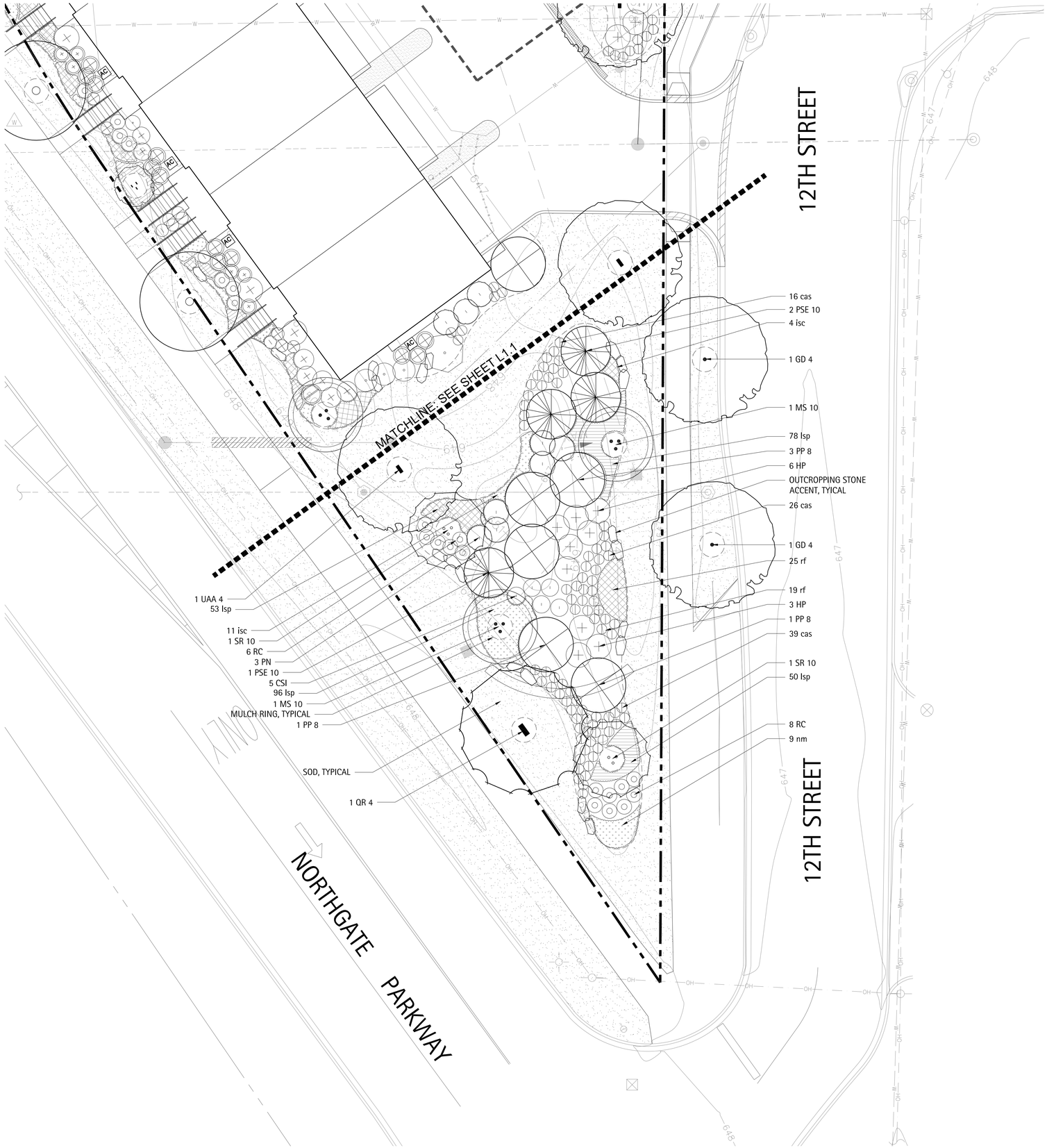

LEGEND

- EXISTING TREE
- DECIDUOUS SHADE TREE 3"-6" CAL.
- MULTI-STEM ORNAMENTAL TREE 8'-10' HT.
- EVERGREEN TREE 8'-12' HT
- EVERGREEN SHRUB 24-30", 36-42"
- UPRIGHT EVERGREEN SHRUB 6-8' HT
- DECIDUOUS SHRUB 24-48"
- LARGE DECIDUOUS SHRUB 4-6' HT
- ORNAMENTAL GRASS
- PERENNIALS/GROUNDCOVER
- SOD

THE LAKOTA GROUP.

116 West Illinois Street
Floor 7
Chicago, Illinois 60654
p 312.467.5445
f 312.467.5484
thelakotagroup.com

PREPARED FOR
REVA Development Partners
116 W Illinois St, 7th Floor
Chicago, IL 60654

PROJECT
Northgate Townhomes
Wheeling, IL

Exhibit received May 17, 2016

ISSUED
April 14, 2016

REVISIONS

No	Date	Issue
01	20160318	Issue for Review
02	20160414	Issue for Permit
03	20160517	Final PUD Set

CHECKED BY SF

DRAWN BY JS

SHEET TITLE
Landscape Plan

SCALE IN FEET
1" = 10'

0' 5' 10' 30'

NORTH

SHEET NUMBER
L1.2

© 2016 The Lakota Group

H:\CAD_files\2015\15022 - Northgate Townhomes\15022 - Master Plan\15022-LNDSCPPLAN-L1.0.dwg

GENERAL NOTES

1. Landscape Contractor shall verify all utility locations (existing and proposed) along with existing conditions and grades (existing and proposed), and note any discrepancies to owner, Engineer, and Landscape Architect immediately, before proceeding with any work.

2. Base information for these plans was taken from Engineer's site survey, geometric, and grading plans. Contractor shall verify all dimensions and locations of existing and proposed features, and familiarize themselves with any obstacles encumbering the installation of this project.

3. Any existing tree surveys or locations for these plans were prepared by the Engineer or a certified arborist. See plans for information.

4. All soil/underground conditions shall be referred to soil testing reports prepared by the owner's consultant.

5. Any archeological information relevant to these plans shall be referred to archeological survey and reports (if appropriate to job site) by the owner's consultant.

6. All surface drainage shall be diverted away from structures and noted site features in all areas as shown on the Civil Engineer's grading plans. Surface drainage shall be diverted to existing or proposed basin structures or inlets as directed by the grading plans. Any site underdrainage as shown in the landscape drawings shall be provided at Landscape Architect's direction. Where poor subsurface drainage conditions occur in the field, Contractor shall notify Landscape Architect immediately and make recommendations for solutions to drainage issues before proceeding with work.

7. Where possible, and at Engineer's approval and per code, all underdrainage shall be tied into existing or proposed storm structures.

8. Landscape accent lighting as shown on these plans is for general location and intent only. The specified fixture and wattage shall be provided and installed on the desired feature at Landscape Architect's direction. Contractor shall field stake all accent lighting locations and obtain Landscape Architect's approval before final installation. Please refer to electrical plans for conduit or low-voltage cable routing and power-source (timer, transformers, switch boxes, etc.).

GENERAL PLANTING NOTES

GENERAL CONDITIONS

1. Contractor shall familiarize themselves with all landscape specifications prior to commencement of work. Any questions or concerns shall be directed to Project Engineer or Landscape Architect in writing prior to landscape work commencement.

2. All project limits shall be fenced with temporary plastic fencing at 48" height, staked at 4' on center, and clearly signed for construction activities. All existing, protected vegetation shall be fenced at a minimum of the plants drip line or as approved by Landscape Architect.

3. The Landscape Contractor shall keep all areas clean and orderly at all times.

4. The Landscape Contractor shall keep all roadways and walkways clear of mud and debris that result from landscape operations.

SITE GRADING & BERMING

5. Berming shall occur along all noted landscape areas to the designed berming heights shown on the plans. All grading, drainage, and utilities shall be evaluated in the field for conflict points with designed berming. Landscape Architect and Project Engineer shall review and approve prior to finished grading. Finished shape and contouring shall be at Landscape Architect's direction.

6. All grading and drainage shall be properly pitched to existing or proposed drainage swales and structures. Landscape Architect and Project Engineer shall field verify and approve.

7. All stone work to be approved by Landscape Architect in field. All stone color samples shall be approved by Landscape Architect prior to ordering.

SOIL & PLANTING MIX

8. All soil planting mix for backfill or beds, whether from on-site stockpile or new imported soil, shall be tested for approved specified pH levels and nutrient content. Submit testing agency with laboratory report to project Landscape Architect for approval, along with recommendations to amending soil as appropriate for use in planting.

9. Topsoil shall be clean, pulverized soil from an acceptable source. Topsoil shall be free of debris, stones, and other material not more than one inch (1") diameter in size. Contractor shall provide the Landscape Architect with receipt of soil source and soil test results from a qualified lab upon request.

10. It is anticipated that all planting areas, including lawn, shall be thoroughly tilled to a minimum of 12-18" depth. All on-site topsoil shall be amended and reused as approved, or removed off-site and disposed of properly. New planting soil mix consisting of pulverized topsoil and mushroom compost shall be installed and properly compacted to the following depths noted in the specifications and landscape planting details.

11. Clean topsoil mix should have a tested and approved pH of 6.0 -- 7.0

12. All planting beds shall be thoroughly tilled and amended with topsoil/compost mix to a minimum of 12" depth.

13. The Landscape Contractor shall prepare planting beds by adding soil amendments to approved on-site or imported topsoil mix in the following quantities:
Trees and Shrubs: three (3) parts topsoil, (1) part peat, and one (1) part sand
Perennials and Groundcovers: three (3) parts topsoil, one (1) part peat, and two (2) parts decomposed mushroom compost. (See Specifications)

14. All excess materials and spoils resulting from the landscape work shall be legally disposed of off-site by the Landscape Contractor.

PLANTING STANDARDS

15. All plant material shall be top-quality grade, free of defects, and meet accepted horticultural standards established by the American Nurserymen's Association (AAN) and as deemed appropriate by Landscape Architect. Landscape Architect shall have the right to reject any, and all, plant material delivered to the site that does not meet acceptable standards.

16. Sizes shown on plant schedule are minimum acceptable sizes.

17. All plants to be balled-in-burlap or container-grown as specified in plant schedule. All plastic root wrapping material and metal wire baskets shall be removed.

18. All new and transplanted plants to be sprayed with an antidessecant within twenty-four (24) hours after planting. Antitranspirant shall be "Wiltpruf" or an approved equal.

19. Landscape Architect shall field verify and approve all final staked tree, shrub, and perennial bed locations prior to installation.

20. The Landscape Contractor shall repair to its original condition any plant material which becomes damaged as a result of landscape operations.

21. All perennials shall be planted at least two (2) feet from the tree trunks planted within planting areas.

22. Landscape Architect shall approve all plant materials for quality, condition and specified sizes. Plant material shall be approved at nursery location, during tagging or before removal and transport to job site. Shrubs, perennials and groundcovers shall be approved at job site prior to installation.

FERTILIZER & MULCHING

23. Prior to mulching tree and shrub planting areas, apply time-release fertilizer by broadcasting over entire planting areas. Rate is to manufacturer's recommendations. Fertilizer is to have no less than 10% available phosphoric acid, and 3-8% total nitrogen soluble potash.

24. All plantings shall receive a slow-release fertilizer with a ratio of 10/10/10.

25. All trees and shrub beds shall receive a minimum of 3" thick shredded hardwood mulch top-dressing.

26. All perennials and groundcover beds shall be top-dressed with two inches (2") minimum of mushroom compost.

MAINTENANCE & WARRANTIES

27. All plants shall be thoroughly watered in at time of planting and watered and maintained throughout construction until final acceptance by owner. Contractor shall water all plants immediately after planting. Flood plants twice during the first twenty-four (24) hours after planting.

28. Landscape Contractor shall warranty all trees, shrubs, perennials, and ornamental grasses under this contract will be healthy and in flourishing condition of active growth one year from date of final acceptance.

29. All newly sodded or seeded areas shall be maintained, watered, and mowed throughout their growing seasons during construction and until final acceptance by owner.

PLANT LIST

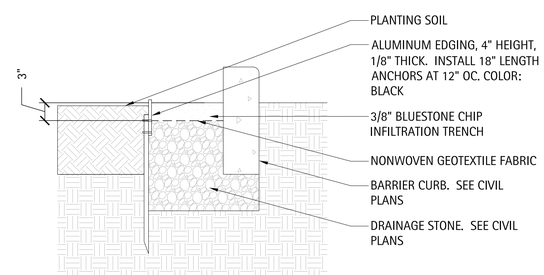

1 **Section - Bluestone Chip Infiltration Trench**
Scale: 1" = 1'-0"

THE LAKOTA GROUP.
116 West Illinois Street
Floor 7
Chicago, Illinois 60654
p 312.467.5445
f 312.467.5484
thelakotagroup.com

PREPARED FOR
REVA Development Partners
116 W Illinois St, 7th Floor
Chicago, IL 60654

PROJECT
Northgate Townhomes
Wheeling, IL

Exhibit received May 17, 2016

ISSUED
April 14, 2016

REVISIONS

No	Date	Issue
01	20160318	Issue for Review
02	20160414	Issue for Permit
03	20160517	Final PUD Set

CHECKED BY SF
DRAWN BY JS

SHEET TITLE
Landscape Notes and Plant List

SCALE IN FEET

NORTH

SHEET NUMBER
L2.0

©2016 The Lakota Group

H:\CAD_files\2015\15022 - Northgate Townhomes\15022 - Master Plan\15022-LNDSCPDETAILS-L2.0.dwg

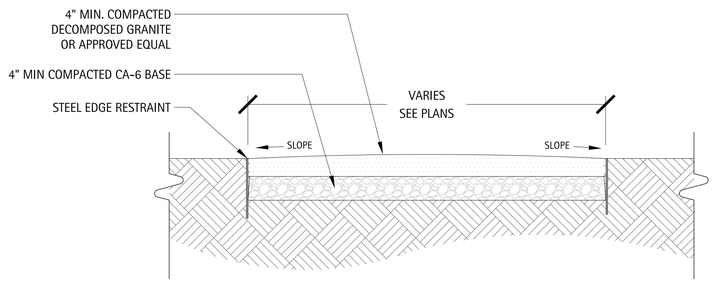

1 Section - Crushed Gravel Driveway Island

Scale: 1" = 1'-0"

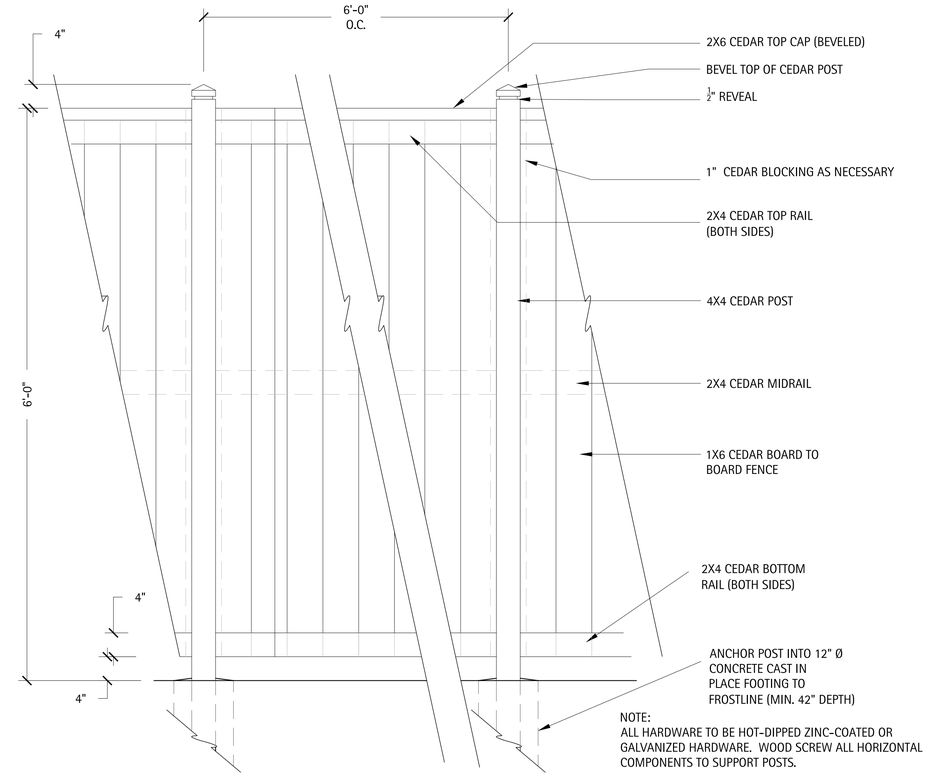

NOTE:
ALL HARDWARE TO BE HOT-DIPPED ZINC-COATED OR GALVANIZED HARDWARE. WOOD SCREW ALL HORIZONTAL COMPONENTS TO SUPPORT POSTS.

2 Elevation - 6' Wood Screening Fence

Scale: 1" = 1'-0"

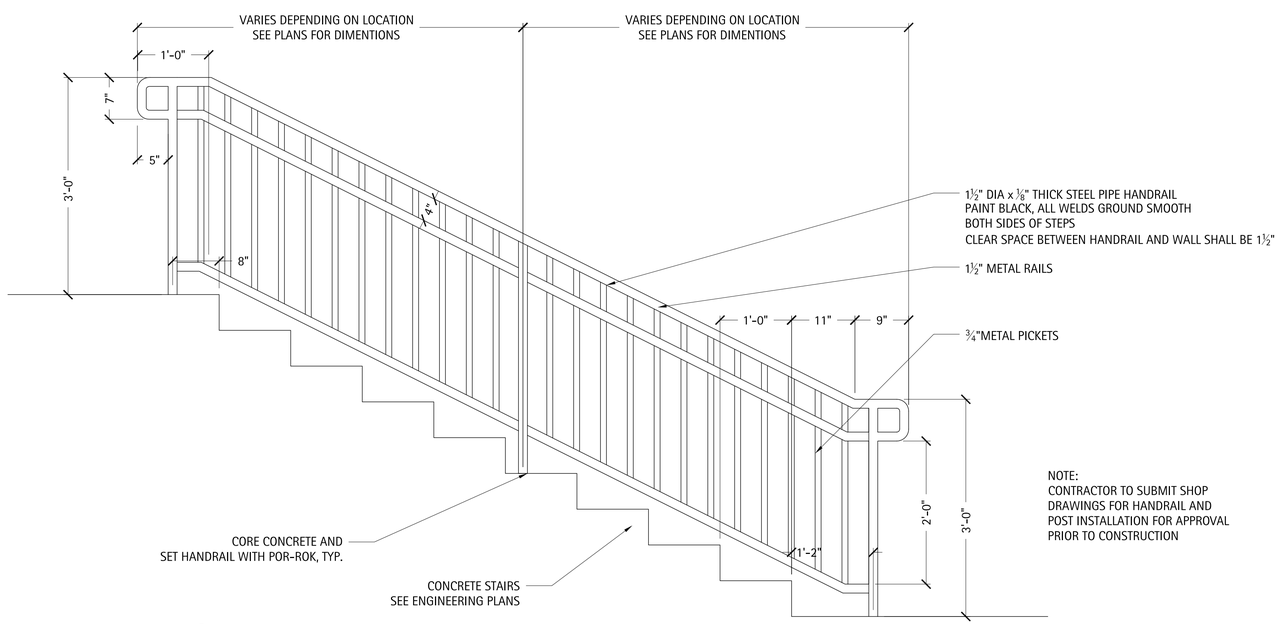

NOTE:
CONTRACTOR TO SUBMIT SHOP DRAWINGS FOR HANDRAIL AND POST INSTALLATION FOR APPROVAL PRIOR TO CONSTRUCTION

3 Elevation - Stair Handrail

Scale: 1" = 1'-0"

THE LAKOTA GROUP.

116 West Illinois Street
Floor 7
Chicago, Illinois 60654
p 312.467.5445
f 312.467.5484
thelakotagroup.com

PREPARED FOR
REVA Development Partners
116 W Illinois St, 7th Floor
Chicago, IL 60654

PROJECT
Northgate Townhomes
Wheeling, IL

Exhibit received May 17, 2016

ISSUED
April 14, 2016

REVISIONS

No	Date	Issue
01	20160318	Issue for Review
02	20160414	Issue for Permit
03	20160517	Final PUD Set

CHECKED BY SF
DRAWN BY JS

SHEET TITLE
Site Details

SCALE IN FEET

NORTH

SHEET NUMBER
L2.1

© 2016 The Lakota Group

H:\CAD_files\2015\15022 - Northgate Townhomes\15022 - Master Plan\15022-LNDSCPDETAILS-L2.0.dwg

DECIDUOUS TREE PLANTING NOTES:
ALL PRUNING MUST BE DONE AFTER PLANTING, AND AT THE DIRECTION OF THE LANDSCAPE ARCHITECT OR VILLAGE FORESTER. ROOT COLLAR SHALL BE SET SO THAT AFTER SOIL SETTLES, THE TOP OF THE BALL SHALL BE AT THE SAME ELEVATION AS FINISHED GRADE.

FINAL BALL ELEVATION AND PLANTER BED GRADING AS DIRECTED BY LANDSCAPE ARCHITECT. WHEN SOIL CONDITIONS ARE ENCOUNTERED WITH POOR DRAINAGE, LANDSCAPE CONTRACTOR SHALL NOTIFY LANDSCAPE ARCHITECT. LANDSCAPE CONTRACTOR SHALL ELABORATE AND PREPARE RECOMMENDATIONS FOR SOLUTION TO PROBLEM.

TREE SUPPORTS (3 PER TREE) SHALL BE GALVANIZED TURNBUCKLES WITH DOUBLE-STRANDED TWELVE (12) GAUGE GALVANIZED WIRE TIES AT TWELVE INCH (12") INTERVALS. GUYS ARE OPTIONAL AT THE DISCRETION OF VILLAGE FORESTER.

SHOW DRAINAGE DETAIL WHERE NECESSARY AS DICTATED BY SITE CONDITIONS. CONNECT TO STORM SYSTEM AS PER ENGINEER'S GRADING AND DRAINAGE PLANS.

STAKE TREES WITH THREE TO FOUR INCH (3-4") CALIPERS. DO NOT STAKE TREES WITH OVER FIVE INCH (5") CALIPERS.

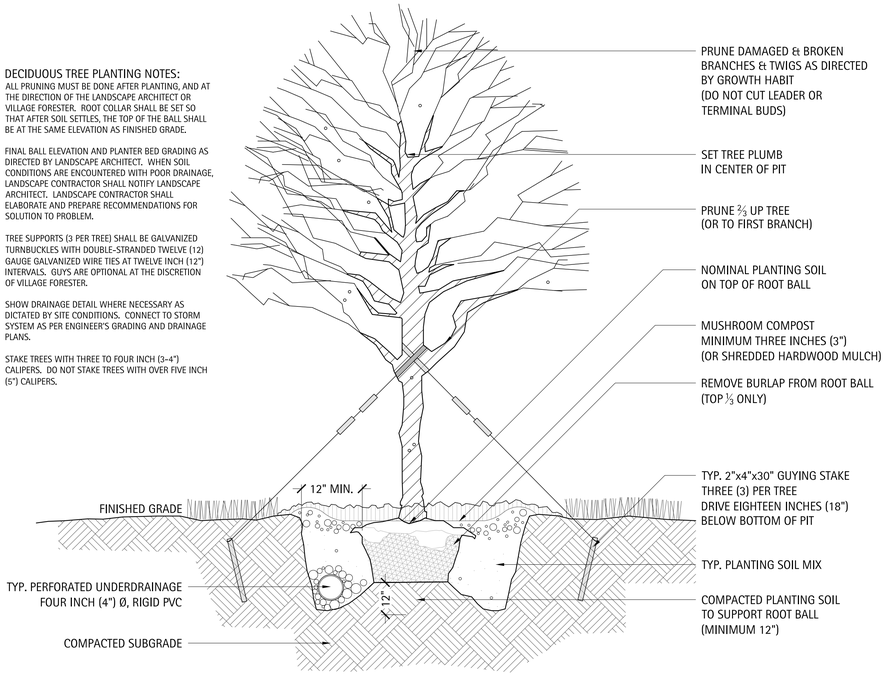

1 Typical Deciduous Tree Planting Detail
Scale: NTS

ORNAMENTAL TREE PLANTING NOTES:
FINAL BALL ELEVATION AND PLANTER BED GRADING AS DIRECTED BY LANDSCAPE ARCHITECT. WHEN SOIL CONDITIONS ARE ENCOUNTERED WITH POOR DRAINAGE, LANDSCAPE CONTRACTOR SHALL NOTIFY LANDSCAPE ARCHITECT. LANDSCAPE CONTRACTOR SHALL ELABORATE AND PREPARE RECOMMENDATIONS FOR SOLUTION TO PROBLEM.

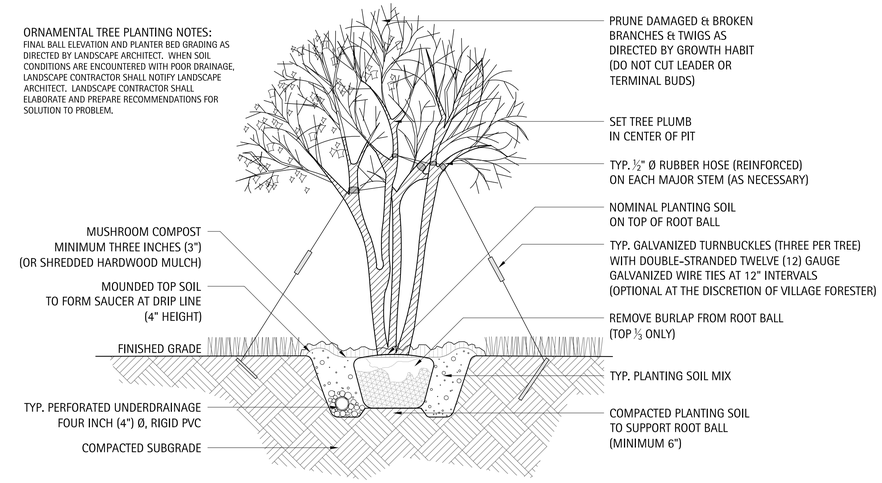

3 Typical Ornamental Tree Planting Detail
Scale: NTS

SHRUB PLANTING NOTES:
FINAL BALL ELEVATION AND PLANTER BED GRADING AS DIRECTED BY LANDSCAPE ARCHITECT. WHEN SOIL CONDITIONS ARE ENCOUNTERED WITH POOR DRAINAGE, LANDSCAPE CONTRACTOR SHALL NOTIFY LANDSCAPE ARCHITECT. LANDSCAPE CONTRACTOR SHALL ELABORATE AND PREPARE RECOMMENDATIONS FOR SOLUTION TO PROBLEM.

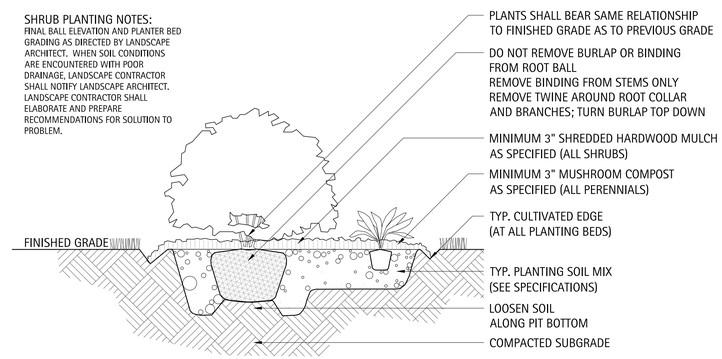

4 Typical Shrub Planting Detail
Scale: NTS

EVERGREEN TREE PLANTING NOTES:
FINAL BALL ELEVATION AND PLANTER BED GRADING AS DIRECTED BY LANDSCAPE ARCHITECT. WHEN SOIL CONDITIONS ARE ENCOUNTERED WITH POOR DRAINAGE, LANDSCAPE CONTRACTOR SHALL NOTIFY LANDSCAPE ARCHITECT. LANDSCAPE CONTRACTOR SHALL ELABORATE AND PREPARE RECOMMENDATIONS FOR SOLUTION TO PROBLEM.

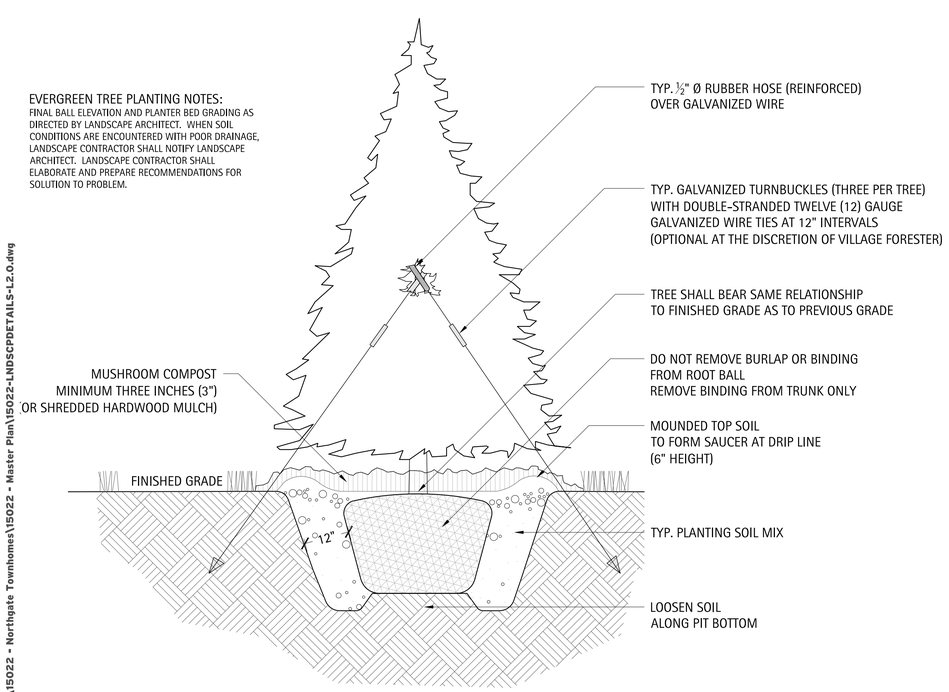

2 Typical Evergreen Tree Planting Detail
Scale: NTS

PERENNIAL/GROUNDCOVER PLANTING NOTES:
FINAL BALL ELEVATION AND PLANTER BED GRADING AS DIRECTED BY LANDSCAPE ARCHITECT. WHEN SOIL CONDITIONS ARE ENCOUNTERED WITH POOR DRAINAGE, LANDSCAPE CONTRACTOR SHALL NOTIFY LANDSCAPE ARCHITECT. LANDSCAPE CONTRACTOR SHALL ELABORATE AND PREPARE RECOMMENDATIONS FOR SOLUTION TO PROBLEM.

PERENNIAL PLANTING LAYOUTS TO BE APPROVED IN THE FIELD BY LANDSCAPE ARCHITECT PRIOR TO INSTALLATION.

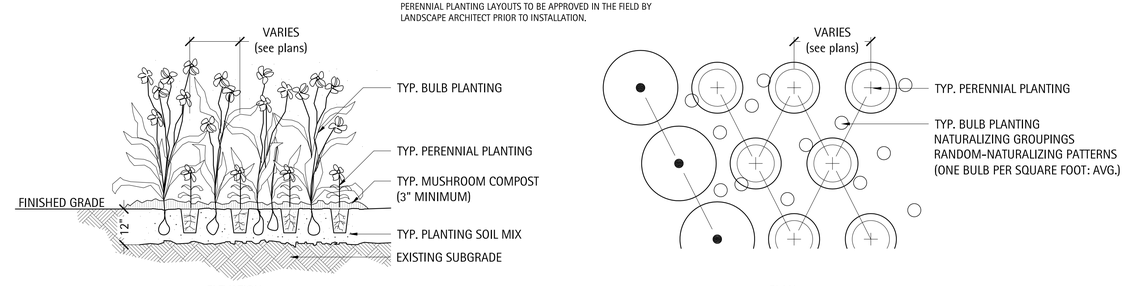

5 Typical Groundcover & Perennial Planting Detail
Scale: NTS

H:\CAD_files\2015\15022 - Northgate Townhomes\15022 - Master Plan\15022-LNDSCPDETAILS-L2.0.dwg

THE LAKOTA GROUP.
116 West Illinois Street
Floor 7
Chicago, Illinois 60654
p 312.467.5445
f 312.467.5484
thelakotagroup.com

PREPARED FOR
REVA Development Partners
116 W Illinois St, 7th Floor
Chicago, IL 60654

PROJECT
Northgate Townhomes
Wheeling, IL

Exhibit received May 17, 2016

ISSUED
April 14, 2016

REVISIONS

No	Date	Issue
01	20160318	Issue for Review
02	20160414	Issue for Permit
03	20160517	Final PUD Set

CHECKED BY SF
DRAWN BY JS

SHEET TITLE
Landscape Details

SCALE IN FEET

NORTH

SHEET NUMBER
L2.2

©2016 The Lakota Group

Schedule

Symbol	Label	Image	QTY	Catalog Number	Description	Lamp	Number Lamps	Lumens per Lamp	LLF	Wattage	Polar Plot
	D		14	TWAC 32TRT	SPECIFICATION BUILDING MOUNTED LUMINAIRE, 32W TRIPLE TUBE COMPACT FLUORESCENT, HORIZONTAL POSITION.	ONE 32-WATT TRIPLE TUBE COMPACT FLUORESCENT, HORIZONTAL POSITION.	1	2400	1	36	Max: 524cd
	F8		12	87AT		ONE 100 WATT INCANDESCANT	1	1600	1	100	Max: 811cd
	A		2	ATB2 40B LED E10 XXXXX R3	ATB2 SERIES 140W LED 1A TYPE 3 4000K CCT	LED	1	12287	1	142.35	Max: 7061cd

Statistics

Symbol	Avg	Max	Description	Min	Max/Min	Avg/Min
+	1.2 fc	19.7 fc	Entire Calc Zone @ 3' 6"	0.0 fc	N/A	N/A
×	2.0 fc	18.7 fc	Parking Area only	0.1 fc	187.0:1	20.0:1

Luminaire Locations

No.	Label	Location X	Location Y	MH	Orientation	Tilt	Aim X	Aim Y	Aim Z
1	A	96.13	347.63	25.00	270.00	0.00	94.42	347.63	0.00
2	A	154.00	183.00	25.00	229.77	0.00	152.69	181.90	0.00
1	D	54.00	417.00	8.00	90.00	0.00	54.00	417.00	0.00
2	D	54.00	394.00	8.00	90.00	0.00	54.00	394.00	0.00
3	D	54.00	371.00	8.00	90.00	0.00	54.00	371.00	0.00
4	D	54.00	348.00	8.00	90.00	0.00	54.00	348.00	0.00
5	D	54.00	325.00	8.00	90.00	0.00	54.00	325.00	0.00
6	D	54.00	303.00	8.00	90.00	0.00	54.00	303.00	0.00
7	D	53.00	280.00	8.00	90.00	0.00	53.00	280.00	0.00
8	D	53.00	257.00	8.00	90.00	0.00	53.00	257.00	0.00
9	D	64.00	236.00	8.00	55.00	0.00	64.00	236.00	0.00
10	D	78.00	217.00	8.00	55.00	0.00	78.00	217.00	0.00
11	D	92.00	199.00	8.00	55.00	0.00	92.00	199.00	0.00
12	D	105.00	180.00	8.00	55.00	0.00	105.00	180.00	0.00
13	D	119.00	162.00	8.00	55.00	0.00	119.00	162.00	0.00
14	D	133.00	143.00	8.00	55.00	0.00	133.00	143.00	0.00
1	F8	90.00	135.00	9.50	235.00	0.00	90.00	135.00	0.00
2	F8	85.00	142.00	9.50	235.00	0.00	85.00	142.00	0.00
3	F8	72.00	160.00	9.50	235.00	0.00	72.00	160.00	0.00
4	F8	58.00	179.00	9.50	235.00	0.00	58.00	179.00	0.00
5	F8	45.00	197.00	9.50	235.00	0.00	45.00	197.00	0.00
6	F8	14.00	276.00	9.50	270.00	0.00	14.00	276.00	0.00
7	F8	14.00	284.00	9.50	270.00	0.00	14.00	284.00	0.00
8	F8	14.00	307.00	9.50	270.00	0.00	14.00	307.00	0.00
9	F8	15.00	330.00	9.50	270.00	0.00	15.00	330.00	0.00
10	F8	15.00	352.00	9.50	270.00	0.00	15.00	352.00	0.00
11	F8	15.00	375.00	9.50	270.00	0.00	15.00	375.00	0.00
12	F8	15.00	398.00	9.50	270.00	0.00	15.00	398.00	0.00

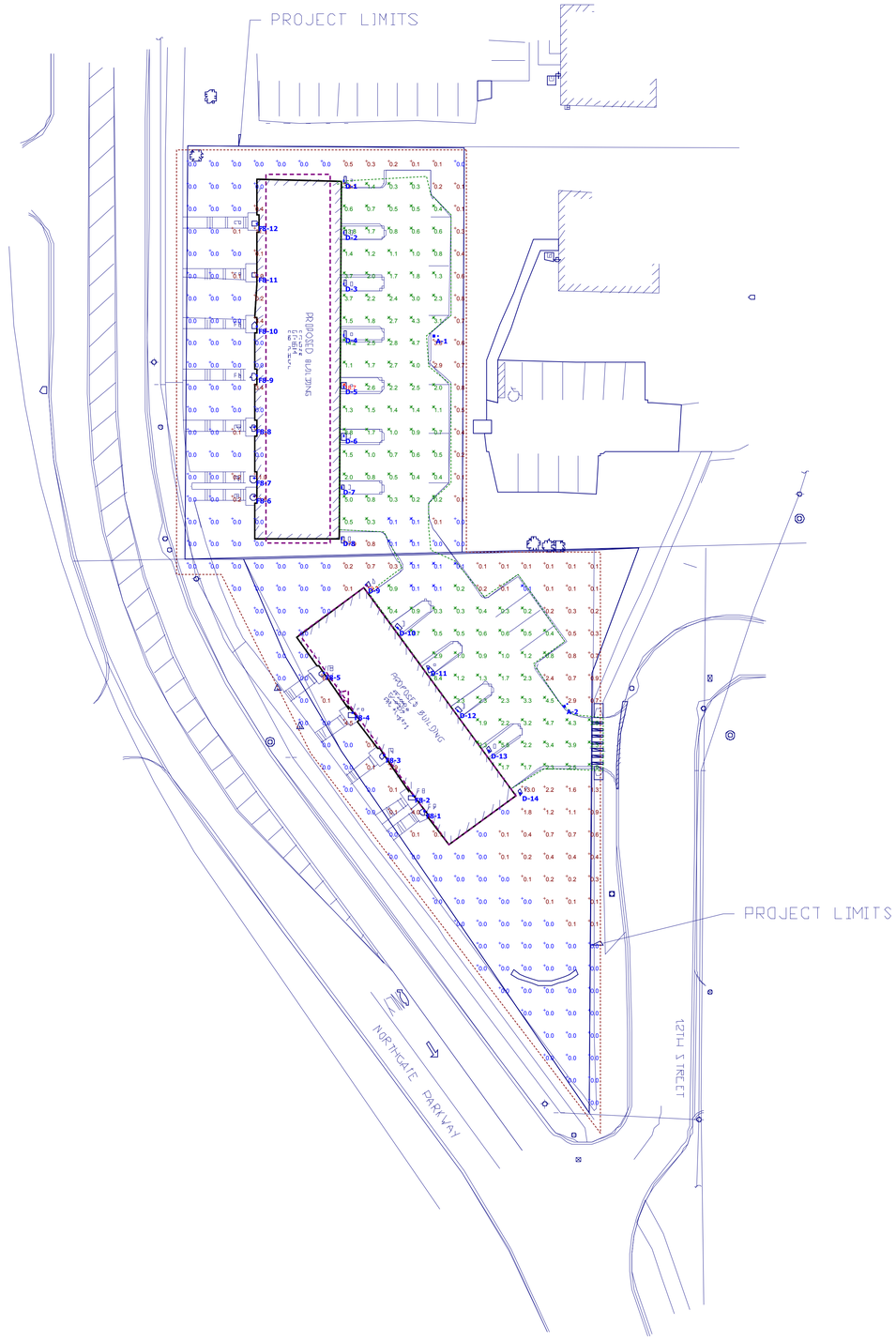

Plan View
Scale - 1" = 30'

Exhibit received April 14, 2016

LITHONIA LIGHTING®

Catalog Number	
Notes	
Type	

FEATURES & SPECIFICATIONS

INTENDED USE

Ideal for a wide variety of low- to medium-height ceiling applications including commercial, retail and hospitality spaces where a wet location lensed fixture is required. Ideal for shower and outdoor applications.

CONSTRUCTION

Galvanized steel mounting frame with mechanical trim retention (yoke) ensures secure and flush reflector mounting to ceiling. Mounting frame has cutout section for remodel applications when installation from below is necessary.

Galvanized bar hangers span up to 24″ o.c. and feature built-in T-bar clips and nailers for T-bar or wood joist installation.

Frames equipped with galvanized junction box UL Listed for through wire applications.

Maximum 1-1/2″ ceiling thickness.

OPTICS

Aluminum full reflectors are optically designed to maximize lumen output and to provide superior glare control.

Glass lenses are available in clear flat, tempered prismatic or fresnel glass lens to provide optimal visual comfort and improved aesthetics.

ELECTRICAL

Electronic ballast with end of lamp life protection standard. Class P thermally protected ballast protects against improper contact with insulation. Minimum starting temperature is 0°F/-18°C.

Rated for #12 AWG conductor thru-branch wiring. Minimum 90° supply wire. Ground wire provided.

Lamp Socket Base:

DTT 4-pin lamps – 18W (G24Q-2); 26W (G24Q-3)

TRT 4-pin lamps – 18W (GX24Q-2); 26W (GX24Q-3); 32W (GX24Q-3); 42W (GX24Q-4); 57W (GX24Q-5)

LISTINGS

Fixtures are UL Listed for thru-branch wiring, Non-IC recessed mounting, wet location, and to U.S. and Canadian Safety Standards.

Compact Fluorescent Downlighting

8″ 8HF

WET LENS

Horizontal 1-Lamp, Triple Tube (TRT)

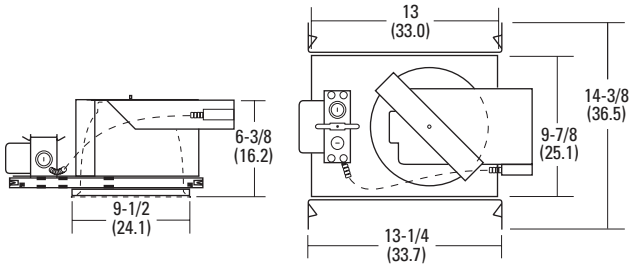

Specifications

Max. height: 6-3/8 (16.2)
Ceiling opening: 8-7/8 (22.5)
Overlap trim: 9-1/2 (24.1)
Length: 13-1/4 (33.7)
Width: 14-3/8 (36.5)

All dimensions are inches (centimeters).

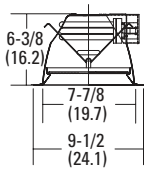

ORDERING INFORMATION For shortest lead times, configure products using **bolded options**.

Example: 8HF 1/26-42TRT F8LS4 MVOLT

8HF					
Series	**Wattage/Lamp**	**Reflector/Color**[2]		**Voltage**	**Options**[6]
8HF	1/18DTT	F8LS1	White splay, flat clear lens	**MVOLT**[4]	ADEZ — Advance Mark 10™ electronic dimming ballast, 120V or 277V. Minimum dimming level 5%. Must be wattage and voltage specific.
	1/26DTT	F8LSB1	Black baffle, flat clear lens	120	ECOS — Lutron EcoSystem electronic dimming ballast, 120V-277V. Must be wattage specific. Minimum dimming level 5%.
	1/18TRT	**F8LS4**	**White splay, fresnel lens**	277	**EL — Emergency PSDL3 DL battery pack with integral test switch**[7]
	1/26-42TRT[1]	**F8LSB4**	**Black baffle, fresnel lens**	347[5]	**ELR — Emergency PSDL3 DL battery pack with remote test switch**[7]
	1/26TRT	F8LS73	White splay, tempered prismatic lens		ELHL — IOTA I-420-R high lumen output emergency battery pack. Integral test switch provided. Maximum average lumen output 1300 (42W).[8]
	1/32TRT	F8LSB73	Black baffle, tempered prismatic lens		ELRHL — IOTA I-420-EM-B high lumen output emergency battery pack. Remote test switch provided. Maximum average lumen output 1300 (42W).[8]
	1/42TRT				GMF — Single slow-blow fuse, must specify voltage
	1/57TRT[2]				BDP — Ballast disconnect plug (meets codes that require in-fixture disconnect)[5]
					WLP — 35K lamp (shipped separately)
					RIF1 — Radio interference filter

Accessories: *Order as separate catalog number.*

SCA8	Sloped ceiling adaptor. Degree of slope must be specified (10D, 15D, 20D, 25D, 30D) Ex: SCA8 10D.
CTE8	Ceiling thickness extender is used when ceiling thickness is greater than 1-1/2 (3.8). Maximum thickness 2 (5.1).

Notes

1 Not available with ECOS or WLP.
2 Not available with 347V, ECOS, EL or ELR.
3 White painted flange standard.
4 Electronic multi-volt ballast capable of operating any line voltage from 120-277V, 50 or 60Hz.
5 Not available with EL or ELR.
6 For additional options, see www.lithonia.com.
7 Add 3″ (7.6) to width and 4-1/2″ (11.4) to length.
8 Not recommended for field installation.

Exhibit received April 14, 2016

8" 8HF Horizontal 1-Lamp, Triple Tube (TRT), Wet Lens

Distribution Curve	Distribution Data	Output Data	Coefficient of Utilization	Illuminance Data at 30" Above Floor for a Single Luminaire

8HF 1/32TRT MVOLT F8LS4, (1) 32TRT lamp, 1.51 s/mh, 2400 rated lumens, test no. LTL18231

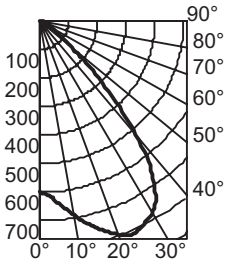

Intensity Distribution

Vertical Angle	Horizontal Angle 0°
0°	600
5°	632
15°	747
25°	808
35°	693
45°	306
55°	80
65°	32
75°	18
85°	1
90°	0

Zonal Lumen Summary

Zone	Lumens	% Lamp
0° - 30°	617.4	25.7
0° - 40°	1025.1	42.7
0° - 60°	1347.6	56.2
0° - 90°	1399.4	58.3
90° - 180°	0.0	0.0
0° - 180°	1399.4	*58.3

*Total Efficiency

Coefficients of Utilization

RCR (pf / pc / pw)	80% 50%	80% 30%	70% 50%	70% 30%	20% 50%	20% 30%
0	69	69	68	68	65	65
1	63	62	62	60	60	58
2	57	55	56	54	55	52
3	52	49	51	48	50	47
4	48	44	47	43	46	42
5	44	39	43	39	42	38
6	40	36	39	35	38	35
7	37	32	36	32	35	32
8	34	30	33	29	33	29
9	31	27	31	27	30	27
10	29	25	29	25	28	25

Exhibit received April 14, 2016

DOWNLIGHTING & TRACK: One Lithonia Way Conyers, GA 30012 Phone: 800.315.4935 Fax: 770-918-1209 www.lithonia.com

© 2010-2011 Acuity Brands Lighting, Inc. All rights reserved. Rev. 03/17/11

INSTALLATION INSTRUCTIONS
ATB2 SERIES LUMINAIRES

⚠WARNING

DISCONNECT POWER BEFORE RELAMPING OR WIRING THE FIXTURE.
READ ALL INSTRUCTIONS COMPLETELY BEFORE STARTING INSTALLATION

⚠WARNING

RISK OF FIRE. PRODUCT FOR OUTDOOR INSTALLATION AND USE ONLY.

⚠CAUTION

TO AVOID THE RISK OF FIRE OR SHOCK, FIXTURE MUST BE INSTALLED IN COMPLIANCE WITH ALL APPLICABLE NATIONAL AND LOCAL ELECTRICAL/BUILDING CODES. FOR CODE INTERPRETATION, CONSULT LOCAL CODE AUTHORITY

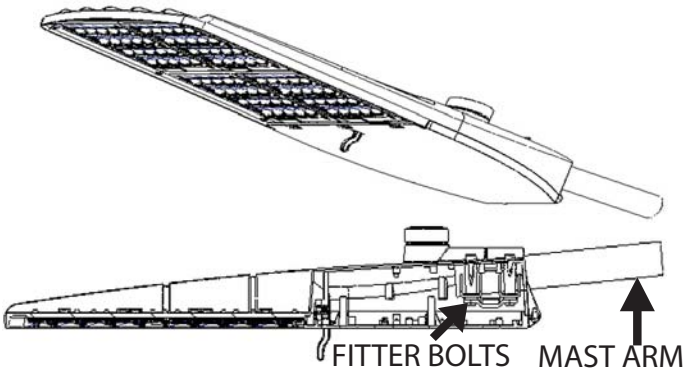

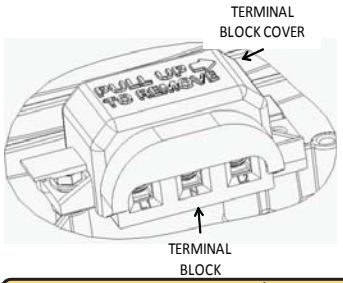

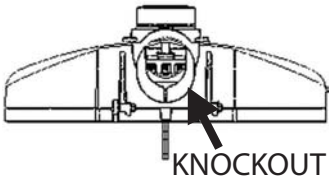

⚠WARNING

ENSURE THAT ALL POWER IS DISCONNECTED PRIOR TO WIRING

WIRING:

PULL UP TERMINAL BLOCK COVER (OPTIONAL) AS SHOWN IN THE PICTURE. FEED THE SUPPLY WIRES THROUGH THE MAST ARM, DRESS THEM SO THEY DO NOT INTERFERE WITH ANY COMPONENTS AND SO THEY WILL NOT BE PINCHED IN THE DOOR, AND CONNECT THEM TO THE PROPER TERMINALS ON THE TERMINAL BLOCK. VERIFY THE SUPPLY VOLTAGE IS CORRECT AS NOTED ON THE NAMEPLATE LABEL. IF SUPPLIED, PUSH DOWN THE TERMINAL BLOCK COVER TO KEEP TERMINALS COVERED.

⚠WARNING

FIXTURE MUST BE GROUNDED TO FUNCTION AS INTENDED

TERMINAL BLOCK:

RECOMMENDED TORQUE FOR SCREWS 35 IN-LBS.

⚠ CAUTION

OVER-TORQUING OF FITTER CLAMP BOLTS CAN CREATE CRACKS IN THE HOUSING CAUSING THE FIXTURE TO FALL TO THE GROUND.

MOUNTING / LEVELING:

DETERMINE THE SIZE OF THE MAST ARM. THIS LUMINAIRE IS DESIGNED TO ACCOMMODATE A MAST ARM FROM 1/1/4" TO 2" DIA. THE LUMINAIRE IS FACTORY SET TO MOUNT TO THE 1-1/4" ARM. TO MOUNT TO A 2" ARM, A MODIFICATION MUST BE MADE. THE REAR OPENING MUST BE ENLARGED. KNOCKOUTS ARE CAST-IN AROUND THE REAR OPENING FOR THIS PURPOSE. TO REMOVE THIS EXCESS MATERIAL, STRIKE WITH A HAMMER OR GRASP WITH PLIERS AND BREAK OFF.

STANDARD MOUNTING:

LOOSEN (DO NOT REMOVE) THE FITTER BOLTS. LIFT THE LUMINAIRE INTO POSITION IN FRONT OF THE MAST ARM SUCH THAT THE MAST ARM ENTERS THROUGH THE OPENING AT THE REAR OF THE LUMINAIRE AND BETWEEN THE FITTER BRACKET AND THE LUMINAIRE HOUSING. TIGHTEN FITTER BOLTS TO **10-12 FT-LBS**.

ANGLE LEVELING:

THIS LUMINAIRE IS DESIGNED TO ADJUST ± 5 DEGREES UP OR DOWN SIDE. TO ADJUST THE LUMINAIRE TO THE UP SIDE, TIGHTEN THE REAR FITTER BOLTS UNTIL GET THE DESIRED ANGLE, AND THEN TIGHTEN THE FRONT FITTER BOLTS TO SECURE THE LUMINAIRE. TO ADJUST TO THE DOWN SIDE TIGHTEN THE FRONT FITTER BOLTS UNTIL GET THE DESIRED ANGLE, THEN TIGHTEN THE REAR FITTER BOLTS TO SECURE THE LUMINAIRE.

OPTIONAL PHOTOCONTROL:

PLUG THE PHOTOCONTROL INTO THE RECEPTACLE ENSURING GASKET IS FIRMLY SEATED. TWIST CLOCKWISE UNTIL IT LOCKS INTO POSITION.
IF PHOTOCONTROL RECEPTACLE ROTATION IS REQUIRED, LOOSEN THE TWO PHILIPS HEAD RECEPTACLE SCREWS. ROTATE RECEPTACLE, MAXIMUM OF 360° , THEN RE-TIGHTEN SCREWS UNTIL SNUG, USING **20-25 IN-LBS** OF TORQUE.
IF PHOTOCONTROL RECEPTACLE ROTATION IS REQUIRED FOR THE P5 / P7 OPTION, LOOSEN THE TWO PHILIPS HEAD RECEPTACLE SCREWS COMPLETELY. ROTATE RECEPTACLE 90°, 180°, OR 270°, THEN RE-TIGHTEN SCREWS UNTIL SNUG, USING **20-25 IN-LBS** OF TORQUE.

American Electric Lighting™
An AcuityBrands Company

Exhibit received April 14, 2016

©2014 ACUITY BRANDS LIGHTING, INC. ALL RIGHTS RESERVED.

INSTALLATION INSTRUCTIONS
ATB2 SERIES LUMINAIRES

⚠WARNING

THIS IS AN ELCTRONIC DEVICE AND SHOULD NOT BE LEFT EXPOSED TO THE ELEMENTS DURING STORAGE, TRANSPORTATION, OR INSTALLATION. IT IS RATED FOR OUTDOOR USE ONCE PROPERLY INSTALLED AND IN NORMAL CONDITION.

NOTE:
THIS DEVICE COMPLIES WITH PART 15 OF THE FCC RULES.
OPERATION IS SUBJECT TO THE FOLLOWING TO CONDITIONS:
(1) THIS DEVICE MAY NOT CAUSE HARMFUL INTERFERENCE, AND
(2) THIS DEVICE MUST ACCEPT ANY INTERFERENCE RECEIVED, INCLUDING INTERFERENCE THAT MAY CAUSE UNDESIRED OPERATION.

5 YEAR LIMITED WARRANTY

American Electric Lighting™
An Acuity Brands Company

Exhibit received April 14, 2016

©2014 ACUITY BRANDS LIGHTING, INC. ALL RIGHTS RESERVED.

REV	DATE	DESCRIPTION	ECO	BY	APP
A	04-JUN-2014	NEW RELEASE	017-3744	ALG	MEJ

PART NUMBER.	DESCRIPTION	DWG NUMBER
057-70-72975	Exhibit received April 14, 2016 INSTALLATION INSTRUCTIONS ATB2	A72975 SHT 3 OF 3

Autobahn Series ATB2

Roadway Lighting

Consistent with LEED® goals & Green Globes™ criteria for light pollution reduction

PRODUCT OVERVIEW

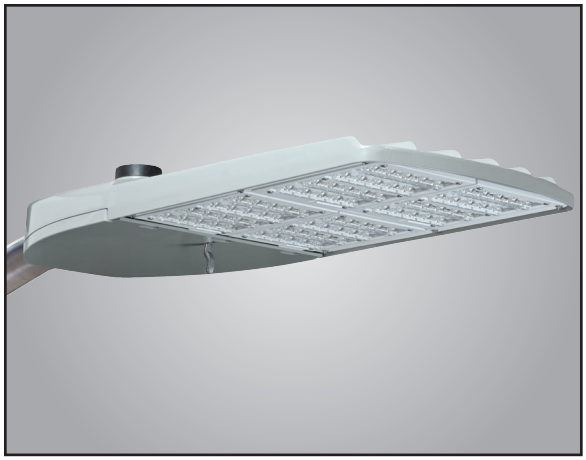

Applications:

Roadways
Off ramps
Residential streets
Parking lots

DIMENSIONS

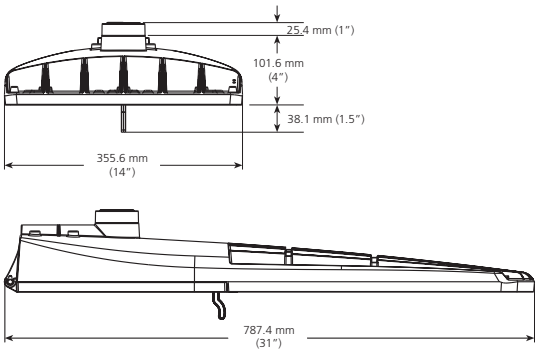

Effective Projected Area (EPA)
The EPA for the ATB2 is 0.78 sq. ft.,
Approx. Wt. = 21 lbs. (9.53 kg)

Features:

OPTICAL

Same Light: Performance is comparable to 250-400W HPS roadway luminaires.

White Light: Correlated color temperature - standard 4000K, 70 CRI minimum or optional 5000K, 70 CRI minimum.

Unique IP66 rated LED light engines provided 0% uplight and restrict backlight to within sidewalk depth, providing optimal application coverage and optimal pole spacing.

Available in Type II, III, IV, & V roadway distributions.

ELECTRICAL

Expected Life: LED light engines are rated >100,000 hours at 25°C, L70. Electronic driver has an expected life of 100,000 hours at a 25°C ambient.

Lower Energy: Saves an average of 40-60% over comparable HPS platforms.

Robust Surge Protection: Three different surge protection options provide a minimum of IEEE/ANSI C62.41 Category C (10kV/5kA) protection.

MECHANICAL

Easy to Maintain: Includes standard AEL lineman-friendly features such as tool-less entry, 3 station terminal block and quick disconnects. Bubble level located inside the electrical compartment for easy leveling at installation.

Rugged die-cast aluminum housing is polyester powder-coated for durability and corrosion resistance. Rigorous five-stage pre-treating and painting process yields a finish that achieves a scribe creepage rating of 8 (per ASTM D1654) after over 1000 hours exposure to salt fog chamber (operated per ASTM B117) Optional Enhanced Corrosion Resistant finish (CR) increases the salt spray exposure to 5000 hours.

Four-bolt mast arm mount is adjustable for arms from 1-1/4" to 2" (1-5/8" to 2-3/8" O.D.) diameter and provides a 3G vibration rating per ANSI C136.

Wildlife shield is cast into the housing (not a separate piece).

CONTROLS

NEMA 3 Pin photocontrol receptacle is standard, with the Acuity designed ANSI 5 Pin and 7 Pin receptacles optionally available.

Premium solid state locking sale photocontrol - PCSS (10 year rated life). Extreme long life sold state locking style photocontrol - PCLL (20 year rated life).

Mulit-level dimming available to provide scheduled dimming as specified by the customer.

Optional onboard Adjustable Output module allows the light output and input wattage to be modified to meet site specific requirements, and can also allow a single fixture to be flexibly applied in many different applications.

WARRANTY & STANDARDS

5 year limited warranty. Full warranty terms located at http://www.acuitybrands.com/Libraries/Terms_and_Conds/ABL_LED_Commerical_Outdoor.sflb.ashx

Rated for -40°C to 40°C ambient.

CSA Certified to U.S. and Canadian standards

Complies with ANSI: C136.2, C136.10, C136.14, C136.31, C136.15, C136.37

Exhibit received April 14, 2016

Note: Specifications subject to change without notice. Actual performance may differ as a result of end-user environment and application.

©2014-2015 Acuity Brands Lighting, Inc. 11/23/15

American Electric Lighting

ORDERING INFORMATION

Example: ATB2 40LEDE70 MVOLT R2

Series

ATB2 Autobahn LED Roadway & Security

Performance Packages

40BLEDE70	40B Chips, 700mA Driver
40BLEDE10	40B Chips, 1050mA Driver
40BLEDE13	40B Chips, 1300mA Driver
60BLEDE70	60B Chips, 700mA Driver
60BLEDE85	60B Chips, 850mA Driver
60BLEDE10	60B Chips, 1050mA Driver
60BLEDE13	60B Chips, 1300mA Driver
80BLEDE70	80B Chips, 700mA Driver
80BLEDE85	80B Chips, 850mA Driver
80BLEDE10	80B Chips, 1050mA Driver

Voltage

MVOLT	Multi-volt, 120-277V
347	347V
480	480V

Optics

R2	Roadway Type II
R3	Roadway Type III
R4	Roadway Type IV
R5	Roadway Type V

Options

Color Temperature (CCT)

(Blank)	4000K CCT, 70 CRI Min. (Standard)
5K	5000K CCT, 70 CRI Min.

Paint

(Blank)	Gray (Standard)
BK	Black
BZ	Bronze
DDB	Dark Bronze
GI	Graphite
WH	White

Surge Protection

Blank	Acuity SPD with inductive filter (Standard)
MP[1]	MOV Pack
IL[1]	SPD with Indicator Light

Terminal Block

(Blank)	Terminal Block (Standard)
T2	Wired to L1 & L2 Positions

Misc.

BL	External Bubble Level
CR	Enhanced Corrosion Resistant Finish
HS	House-Side Shield
NL	Nema Label
XL	Not CSA Certified

Controls

(Blank)	3 Pin NEMA Photocontrol Receptacle (Standard)
P5	5 Pin Photocontrol Receptacle (Dimmable Driver Included)
P7	7 Pin Photocontrol Receptacle (Dimmable Driver Included)
NR	No Photocontrol Receptacle
AO[2]	Field Adjustable Output
DM	0V-10V Dimmable Driver (Controls by others)
ML[3,4]	Multi-Level Dimming
PCSS[1]	Solid State Lighting Photocontrol (120-277V)
PCLL	Solid State Long Life Photocontrol
SH	Shorting Cap

Packaging

(Blank)	Single Unit (Standard)
JP	Job Pack (24/Pallet)

Notes

1. Not available in 347 or 480V.
2. Not available with DM or ML options.
3. Not available with AO, DM, P5 or P7 options.
4. Dimming schedule and light level information required from the customer in order to configure product. Contact Infrastructure Technical Support to proceed.

Note: Specifications subject to change without notice. Actual performance may differ as a result of end-user environment and application.

Exhibit received April 14, 2016

American Electric Lighting
AEL Headquarters, 3825 Columbus Road, Granville, OH 43023
www.americanelectriclighting.com
© 2014-2015 Acuity Brands Lighting, Inc. All Rights Reserved. 11/23/15

Warranty Five-year limited warranty. Complete warranty terms located at: www.acuitybrands.com/CustomerResources/Terms_and_conditions.aspx
Actual performance may differ as a result of end-user environment and application.
All values are design or typical values, measured under laboratory conditions at 25 °C.
Specifications subject to change without notice.

Please contact your sales representative for the latest product information.

PERFORMANCE PACKAGE

Performance Package	Drive Current (mA)	Input Watts	Optic	4000K CCT		LLD @ 25°C	
				Delivered Lumens	Efficacy (LPW)	50k Hours	100k Hours
40B	700	91	R2	11266	124	0.98	0.96
	1000	138		15685	114	0.95	0.90
	1300	177		18277	103	0.94	0.88
	700	91	R3	11160	123	0.98	0.96
	1000	138		15520	112	0.95	0.90
	1300	177		18050	102	0.94	0.88
	700	91	R4	10775	118	0.98	0.96
	1000	138		15015	109	0.95	0.90
	1300	177		17341	98	0.94	0.88
	700	91	R5	12097	133	0.98	0.96
	1000	138		16729	121	0.95	0.90
	1300	177		19564	111	0.94	0.88
60B	700	133	R2	16986	128	0.98	0.96
	850	173		19966	115	0.95	0.90
	1000	208		23710	114	0.95	0.90
	1300	260		27308	105	0.94	0.88
	700	133	R3	17128	129	0.98	0.96
	850	173		20105	116	0.95	0.90
	1000	208		23250	112	0.95	0.90
	1300	260		27477	106	0.94	0.88
	700	133	R4	16516	124	0.98	0.96
	850	173		19429	112	0.95	0.90
	1000	208		22718	109	0.95	0.90
	1300	260		26400	102	0.94	0.88
	700	133	R5	17882	134	0.98	0.96
	850	173		21000	121	0.95	0.90
	1000	208		24673	119	0.95	0.90
	1300	260		28838	111	0.94	0.88
80B	700	180	R2	22528	125	0.98	0.96
	850	224		26394	118	0.95	0.90
	1000	274		30998	113	0.95	0.90
	700	180	R3	22127	123	0.98	0.96
	850	224		25955	116	0.95	0.90
	1000	274		30491	111	0.95	0.90
	700	180	R4	21701	121	0.98	0.96
	850	224		25350	113	0.95	0.90
	1000	274		29567	108	0.95	0.90
	700	180	R5	23799	132	0.98	0.96
	850	224		27851	124	0.95	0.90
	1000	274		32391	118	0.95	0.90

Note: Information shown above is based on nominal system data. Individual fixture performance may vary. Specifications subject to change without notice.

ATB2 LLD Multiplier	15°C	20°C	25°C	30°C	35°C	40°C
	1.02	1.01	1	0.99	0.97	0.96

To calculate the LLD for a temperature other than 25°C, multiply the LLD @ 25°C (shown in the performance package table) by the LLD multiplier for the selected temperature.

Exhibit received April 14, 2016

American Electric Lighting
AEL Headquarters, 3825 Columbus Road, Granville, OH 43023
www.americanelectriclighting.com
© 2014-2015 Acuity Brands Lighting, Inc. All Rights Reserved. 11/23/15

Warranty Five-year limited warranty. Complete warranty terms located at:
www.acuitybrands.com/CustomerResources/Terms_and_conditions.aspx
Actual performance may differ as a result of end-user environment and application.
All values are design or typical values, measured under laboratory conditions at 25 °C.
Specifications subject to change without notice.

Please contact your sales representative for the latest product information.

LITHONIA LIGHTING®

Catalog Number	
Notes	
Type	

FEATURES & SPECIFICATIONS

INTENDED USE — For entrances, stairwells, corridors and other pedestrian areas.

CONSTRUCTION — Rear housing is rugged, corrosion-resistant, die-cast aluminum. Front cover is one-piece UV-resistant injection molded polycarbonate, internally painted. Captive external hardware is specially treated for corrosion resistance and includes slotted hex-head and tamperproof fasteners.

FINISH — Dark bronze (DDB) corrosion-resistant polyester powder.

OPTICAL — One-piece die-formed reflector is diffused aluminum. Refractor is clear UV stabilized polycarbonate, providing **IES cutoff** distribution and maximum lateral light output. Front cover is sealed and gasketed to inhibit the entrance of outside contaminants.

ELECTRICAL — Compact fluorescent ballasts are multi-volt (120-277) electronic high power factor. UL Listed. Four-pin (26DTT, 26TRT, 32TRT and 42TRT) positive latching thermoplastic socket.

All components are heat-sinked directly to the cast housing for maximum heat dissipation.

INSTALLATION — Mount to any vertical surface or to a 4" outlet box. Back access through gasketed slot. Top wiring access through 1/2" threaded conduit entry. (Through-wiring requires use of a conduit tee).

LISTING — UL listed for wet locations. IP65 rated. UL Listed to US and Canadian safety standards (see Options). NOM Certified.

WARRANTY — 1-year limited warranty. Complete warranty terms located at www.acuitybrands.com/CustomerResources/Terms_and_conditions.aspx.

Note: Specifications subject to change without notice.

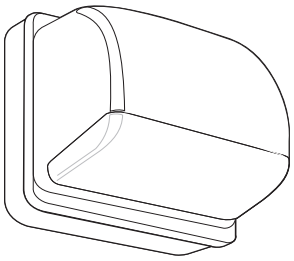

Cutoff Mini Wall-Packs

TWAC

COMPACT FLUORESCENT
26-42TRT

Specifications

Height:	10 (25.4)
Width:	11-1/2 (29.2)
Depth:	9 (22.7)
*Weight:	10 lbs. (4.53kg)

*Weight as configured example below. Specifications are in inches (cm) unless otherwise noted.

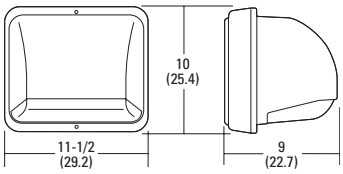

ORDERINGINFORMATION For shortes lead times, configure product using **standard options (shown in bold).**

Example: TWAC 42TRT MVOLT LPI

TWAC						
Series	**Wattage**	**Voltage**	**Ballast**	**Options**	**Finish**	**Lamp**[7]
TWAC	26DTT 26TRT 32TRT **42TRT**	**120** **277** **347** **MVOLT**[1]	**(blank)** Electronic 0ºF	Shipped installed in fixture GMF Internal slow-blow fusing EC Emergency circuit[2] DC12 Emergency circuit 12 volt (35 watt lamp included)[3] DC2012 Emergency circuit 12 volt (20 watt lamp included)[3] 2DC12 Emergency circuit 12 volt (2 35 watt lamp included)[3] 2DC2012 Emergency circuit 12 volt (2 20 watt lamp included)[3] **CSA** Listed and labeled to comply with Canadian Standards NOM NOM Certified (consult factory) PE Photocell[4] Shipped separately[5] WG Wire guard	**(blank)** Dark bronze DNA Natural aluminum DBL Black DMB Medium bronze DWH White DSS Sandstone CRT Non-stick protective coating[6] Super Durable Finishes DDBXD Dark bronze DBLXD Black DNAXD Natural aluminum DWHXD White DDBTXD Textured dark bronze DBLBXD Textured black DNATXD Textured natural aluminum DWHGXD Textured white	**LPI** Lamp included **L/LP** Less lamp

NOTES:

1 Optional multi-volt electronic ballast capable of operating any line voltage from 120-277V.
2 Maximum allowable wattage lamp included.
3 Not available with EC or NOM.
4 Not available with MVOLT.
5 May be ordered as an accessory as TWAWG U.
6 Finish applied to housing only.
7 Must be specified (35K lamp with LPI).

Exhibit received April 14, 2016

TWAC 32TRT

Test No. LTL8361

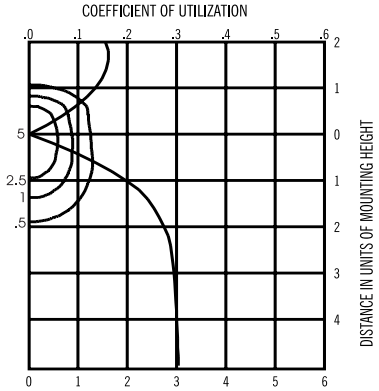

32W Compact Fluorescent lamp, 3200 rated lumens. Footcandle values based on 20' mounting height, Distribution , cutoff.

TWAC 42TRT

Test No. LTL8339

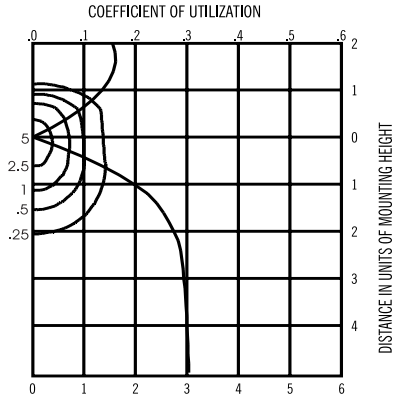

42W Compact Fluorescent lamp, 5200 rated lumens. Footcandle values based on 20' mounting height, Distribution , cutoff.

Mounting Height Correction Factor
(Multiply the fc level by the correction factor)

8 ft. = 6.25
10 ft.= 4.00
12 ft.= 2.78
15 ft.= 1.78

$$\left(\frac{\text{Existing Mounting Height}}{\text{New Mounting Height}}\right)^2 = \text{Correction Factor}$$

Notes

1 Photometric data for other distributions can be accessed at www.lithonia.com.

2 Tested to current IES and NEMA standards under stabilized laboratory conditions. Various operating factors can cause differences between laboratory data and actual field measurements. Dimensions and specifications on this sheet based on the most current available data and are subject to change without notice.

3 For electrical characteristics, consult outdoor technical data specification sheets on www.lithonia.com.

4 Actual performance may differ as a result of end-user environment and application.

Exhibit received April 14, 2016

OUTDOOR: One Lithonia Way Conyers, GA 30012 Phone: 770.922.9000 Fax: 770-918-1209 www.lithonia.com ©1997-2014 Acuity Brands Lighting, Inc. All rights reserved. Rev. 06/03/14

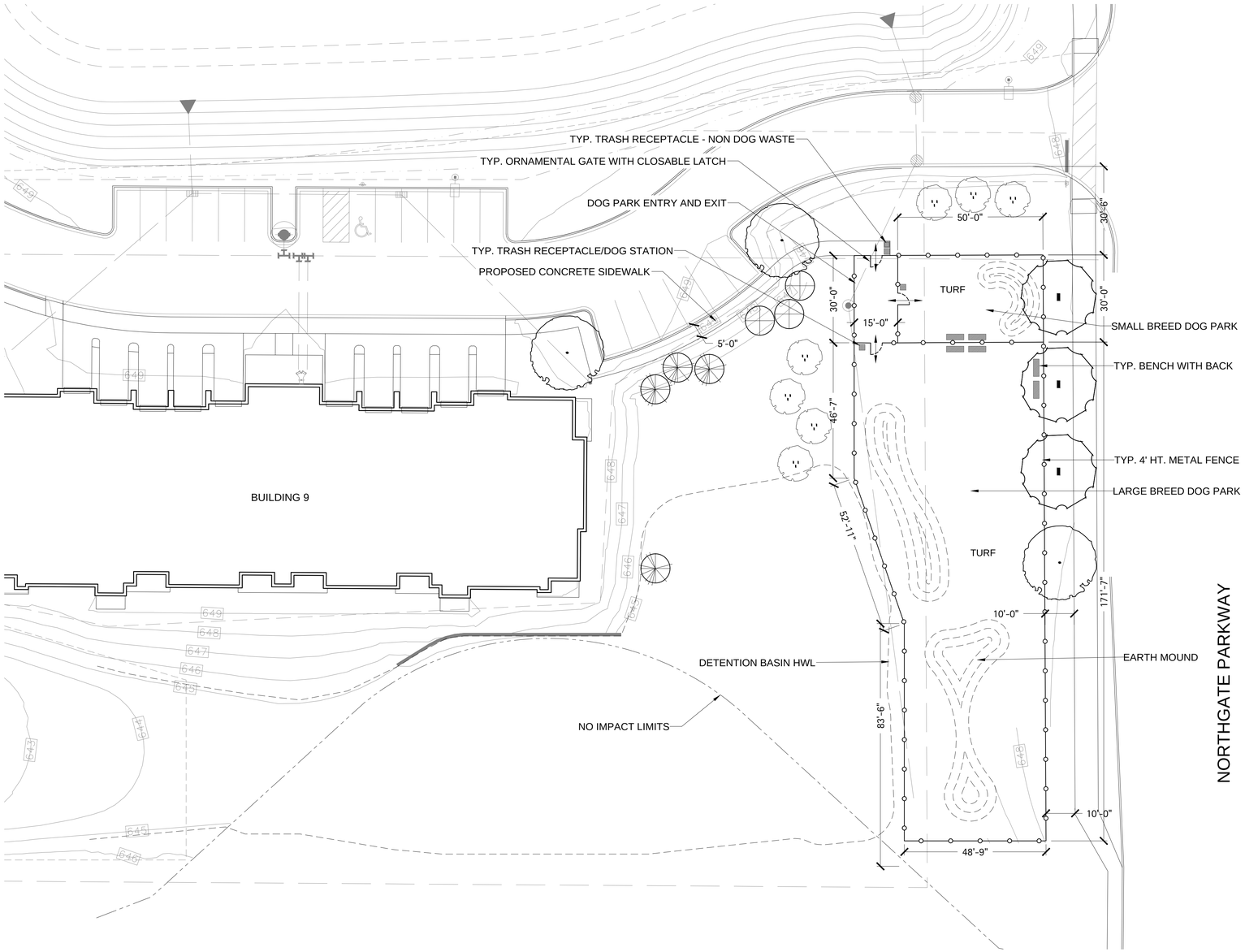

TYP. 4' HT. ORNAMENTAL FENCE WITH CLOSABLE LATCH GATE TO MATCH SP-4 FENCE DESIGN.
SOURCE: JERITH ALUMINUM FENCES OF DISTINCTION
www.jerith.com
STYLE: PET FENCE-SPECIALTY DESIGNS (SP-4)
COLOR: BLACK POWDER COAT
615 LINEAR FEET

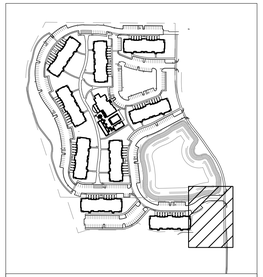

KEY MAP

Exhibit received April 14, 2016

LAKOTA
THE LAKOTA GROUP INC
212 West Kinzie Street, 3rd Floor
Chicago, Illinois 60654
p 312.467.5445
f 312.467.5484
info@thelakotagroup.com

Planning
Urban Design
Landscape Architecture
Community Relations

REVA DEVELOPMENT PARTNERS LLC
212 West Kinzie Street, 3rd Floor
Chicago, IL 60654

NOT FOR CONSTRUCTION

Northgate Crossing

Wheeling, IL

DOG PARK AREA

Revisions	
1. 06/29/15	Revisions
2. 08/20/15	Revisions
3. 04/12/16	For Review
4.	
5.	
6.	
7.	
8.	

Date:	04/12/2016
Drawn By:	JA
Checked By:	ZM

0' 10' 20'

L1-00

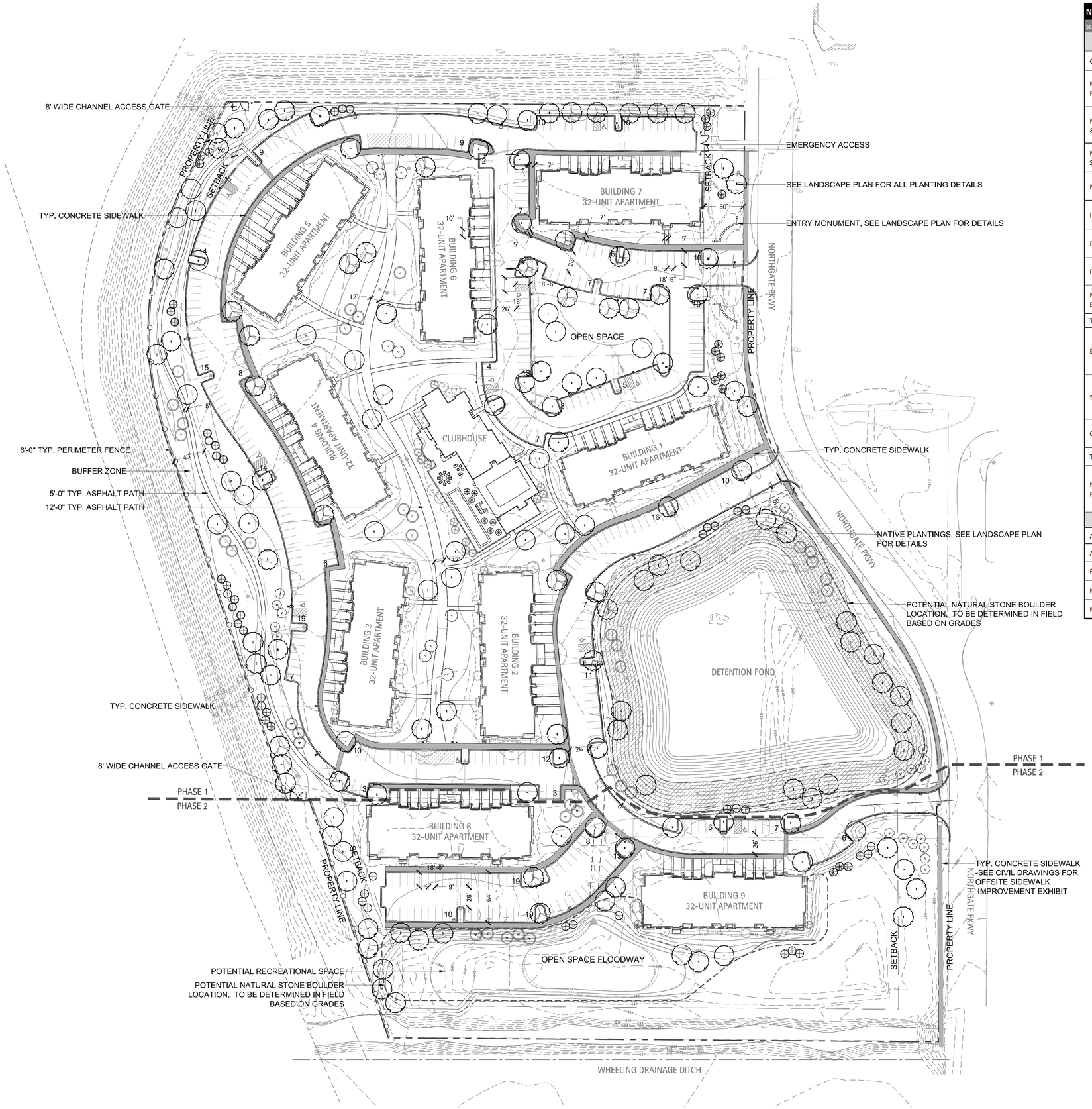

NORTHGATE CROSSING - Wheeling, Illinois

Statistical Sheet for Final PUD Review

Site Data / Calculations	Requirements by Code (R-4)	Provided		
Gross Land Area	20,000 square feet min.	907,058	Square Feet	20.82 Ac. (100%)
Maximum Land Area to be covered by Principal Buildings	No more than one Principal Building per lot in any planned unit development or any mixed use district may be permitted	128,066	Square Feet	2.94 Ac. (14.2%)
Maximum Land Area devoted to Parking & Drives	1.7 spaces per unit (up to 1 bedroom), 2.2 spaces per unit (2 or more bedrooms, and 5 unreserved visitor spaces	239,580	Square Feet	5.50 Ac. (26.4%)
Minimum Land Area devoted to Open Space	Minimum of 25% of the Net Site	531,499	Square Feet	12.38 Ac. (59.4%)
Maximum Proposed Residential Density	20.00 Units/Ac.	13.80	Units/Ac.	20.82 Ac.
Impervious Surface	N/A	435,969	Square Feet	10.00 Ac. (48.0%)
Pervious Surface	N/A	470,950	Square Feet	10.81 Ac. (52.0%)
Proposed Number of Buildings	N/A	9	Buildings	N/A
Maximum Number of Dwelling Units per Building	N/A	32	Units/Bldg	N/A
Total Units	N/A	288	Units	N/A
Bedrooms per Unit	N/A	198	1 Bedroom Units	68.75%
	N/A	90	2 Bedroom Units	31.25%
Surface Parking	N/A	359	Spaces	66.60%
Garage Parking	Units shall include a totally enclosed attached garage with a minimum of 528 square feet	90	Spaces	16.22%
Tandem Parking	N/A	90	Spaces	16.22%
Number of Motor Vehicle Parking Spaces Provided (Total)	250 to 499 Minimum Required/ 105% Maximum Percentage Increase Allowed Over Required Parking with specific and reasonable justification	539	Spaces	1.87 Spaces/Unit
Architectural Data / Calculations (Per Building)				
Area Under Roof	19,271 Sq. Ft.			
Area of Masonry	6158 Sq. Ft.			
Fenestration	2,921 Sq. Ft.			
Masonry and Fenestration	7,390 Sq. Ft.			
Masonry Percentage	38.35%			

NOTES

TYPICAL CONCRETE SIDEWALK

* REMAINDER OF PATHWAYS AND SIDEWALKS TO BE ASPHALT

APPROVED EXHIBIT TO ORDINANCE NO. 4876

LAKOTA
THE LAKOTA GROUP INC
212 West Kinzie Street, 3rd Floor
Chicago, Illinois 60610
p 312.467.5445
f 312.467.5484
info@thelakotagroup.com

Planning
Urban Design
Landscape Architecture
Community Relations

REVA DEVELOPMENT PARTNERS LLC
212 West Kinzie Street, 3rd Floor
Chicago, IL 60654

NOT FOR CONSTRUCTION

Northgate Crossing
Wheeling, IL

OVERALL SITE PLAN

Revisions
1.
2.
3.
4.
5.
6.
7.
8.

Date:	05/14/2014
Drawn By:	JA
Checked By:	ZM

0 60' 120'

ALTA/ACSM LAND TITLE SURVEY

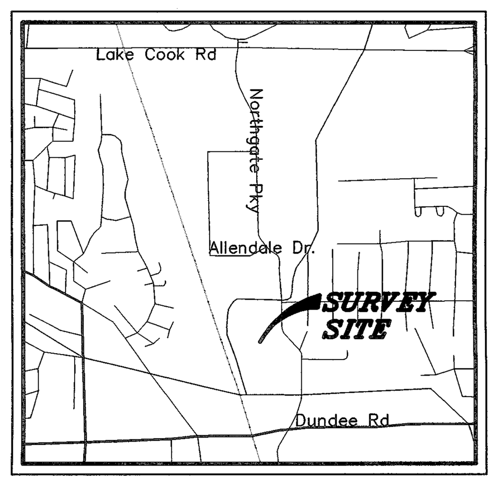

LOCATION MAP

(NOT TO SCALE)

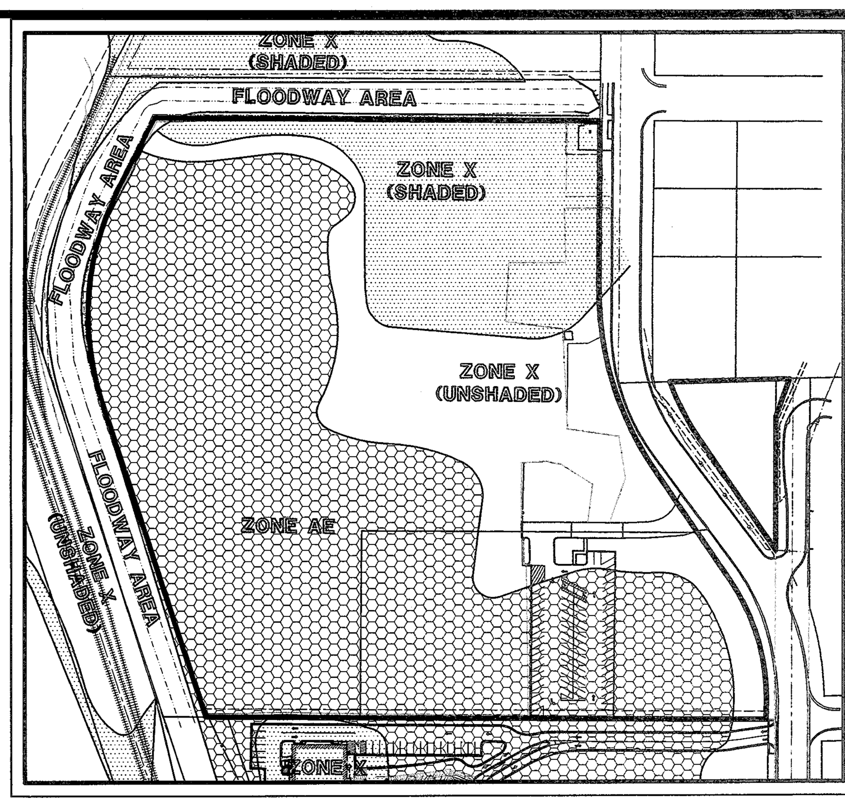

FLOOD ZONE MAP

SCALE: 1"=200'

LEGAL DESCRIPTION

PARCEL 1:
LOTS 27 AND 29 IN NORTHGATE INDUSTRIAL CENTER, BEING A SUBDIVISION IN PART OF SECTIONS 2 AND 3, TOWNSHIP 42 NORTH, RANGE 11, EAST OF THE THIRD PRINCIPAL MERIDIAN, ACCORDING TO THE PLAT THEREOF RECORDED FEBRUARY 16, 1978 AS DOCUMENT NO 24329400 ALL IN COOK COUNTY, ILLINOIS.

PARCEL 2:
LOT 28 IN NORTHGATE INDUSTRIAL CENTER, BEING A SUBDIVISION IN PART OF SECTIONS 2 AND 3, TOWNSHIP 42 NORTH, RANGE 11, EAST OF THE THIRD PRINCIPAL MERIDIAN, ACCORDING TO THE PLAT THEREOF RECORDED FEBRUARY 16, 1978 AS DOCUMENT NO 24329400 ALL IN COOK COUNTY, ILLINOIS.

PARCEL 3:
THAT PART OF VACATED 12TH STREET LYING EAST OF AND ADJOINING LOT 28 IN NORTHGATE INDUSTRIAL CENTER AFORESAID, AS VACATED BY ORDINANCE RECORDED NOVEMBER 18, 1971 AS DOCUMENT 21715885.

SURVEYED AREA

PARCEL 1 (LOTS 27 AND 29) = 684,479 SQUARE FEET (15.713 ACRES ±)
PARCEL 2 (LOTS 28) = 21,156 SQUARE FEET (0.486 ACRES ±)
PARCEL 3 (VACATED 12TH STREET) = 550 SQUARE FEET (0.013 ACRES ±)
TOTAL SURVEYED PROPERTY = 706,185 SQUARE FEET (16.212 ACRES ±)

GRAPHIC SCALE

(IN FEET)
1 inch = 50 ft.

LINE TABLE		
LINE	BEARING	LENGTH
L1	S20°02'20"W	59.07'
L2	N00°15'21"E	55.00'
L3	N88°35'32"E	20.00'

PARKING SUMMARY

REGULAR PARKING SPACES=71
HANDICAPPED PARKING SPACES=2
TOTAL PARKING SPACES=73

LOT 27 DOES NOT CONTAIN ANY PARKING STALLS. ALL THE PARKING STALLS ARE WITHIN LOT 29

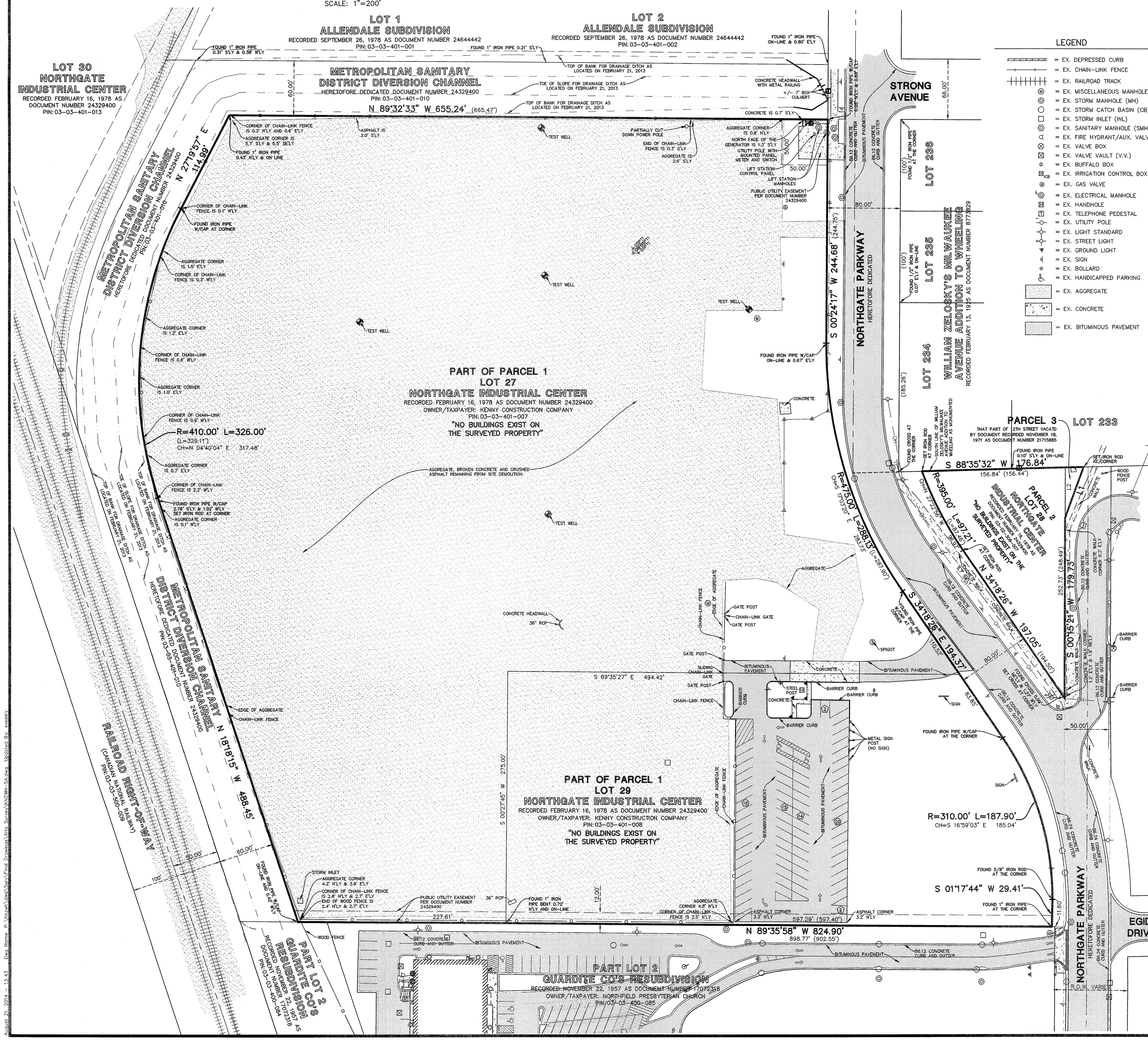

BASIS OF BEARINGS

BEARINGS ARE BASED UPON THE ILLINOIS STATE PLANE COORDINATE SYSTEM OF 1983, EAST ZONE-2007 ADJUSTMENT

SURVEYOR'S NOTES

1. DISTANCES ARE MARKED IN FEET AND DECIMAL PLACES THEREOF. NO DIMENSION SHALL BE ASSUMED BY SCALE MEASUREMENT HEREON. DISTANCES AND/OR BEARINGS SHOWN IN PARENTHESIS (456.67') ARE RECORD OR DEED VALUES, NOT FIELD MEASURED.

2. THE COPY OF THE NORTHGATE INDUSTRIAL CENTER SUBDIVISION PLAT IS ILLEGIBLE THEREFORE MANY OF THE DIMENSIONS COULD NOT BE DETERMINED. THE RECORD DISTANCES THAT COULD BE DETERMINED WITHIN THE SURVEY PROPERTY HAVE BEEN NOTED HEREON.

3. COMPARE THIS PLAT, LEGAL DESCRIPTION AND ALL SURVEY MONUMENTS BEFORE BUILDING, AND IMMEDIATELY REPORT ANY DISCREPANCIES TO THE SURVEYOR.

4. THE LOCATION OF THE PROPERTY LINES SHOWN ON THE FACE OF THIS PLAT ARE BASED ON THE LEGAL DESCRIPTION CONTAINED IN THE TITLE COMMITMENT AND SHOWN HEREON. THIS INFORMATION HAS BEEN FURNISHED BY THE CLIENT AND COMPARED TO RECORD DEEDS TO CHECK FOR GAPS AND/OR OVERLAPS. HOWEVER, THIS SURVEY MAY NOT REFLECT HISTORICAL MATTERS OF TITLE AND OWNERSHIP THAT HAVE NOT BEEN DISCLOSED BY THE TITLE COMMITMENT.

5. ONLY THE IMPROVEMENTS WHICH WERE VISIBLE FROM ABOVE GROUND AT TIME OF SURVEY AND THROUGH A NORMAL SEARCH AND WALK THROUGH OF THE SITE ARE SHOWN ON THE FACE OF THIS PLAT. LAWN SPRINKLER SYSTEMS, IF ANY, ARE NOT SHOWN ON THIS SURVEY.

6. AT THE TIME OF THE SURVEY THE SITE WAS COVERED BY AGGREGATE AND GRAVEL REMAINING FROM SITE DEMOLITION. ANY UTILITIES, IMPROVEMENTS AND/OR BUILDING FOUNDATION COVERED BY AGGREGATE OR GRAVEL HAVE NOT BEEN SHOWN HEREON.

7. MANHOLES, INLETS AND OTHER UTILITY RIMS OR GRATES SHOWN HEREON ARE FROM FIELD LOCATION OF SUCH, AND ONLY REPRESENT SUCH UTILITY IMPROVEMENTS WHICH ARE VISIBLE FROM ABOVE GROUND AT TIME OF SURVEY, THROUGH A NORMAL SEARCH AND WALK THROUGH OF THE SITE. THE LABELING OF THESE MANHOLES (SANITARY, WATER, ETC.) IS BASED SOLELY ON THE "STAMPED" MARKINGS ON THE RIM. NO UNDERGROUND OBSERVATIONS HAVE BEEN MADE TO VERIFY THE ACTUAL USE OR EXISTENCE OF UNDERGROUND UTILITIES.

8. SURFACE INDICATIONS OF UTILITIES ON THE SURVEYED PARCEL HAVE BEEN SHOWN. UNDERGROUND AND OFFSITE OBSERVATIONS HAVE NOT BEEN MADE TO DETERMINE THE EXTENT OF UTILITIES SERVING OR EXISTING ON THE PROPERTY. PUBLIC AND/OR PRIVATE RECORDS HAVE NOT BEEN SEARCHED TO PROVIDE ADDITIONAL INFORMATION. OVERHEAD WIRES AND POLES (IF ANY) HAVE BEEN SHOWN, HOWEVER THEIR FUNCTION AND DIMENSIONS HAVE NOT BEEN SHOWN.

9. THIS SURVEY MAY NOT REFLECT ALL UTILITIES, OR IMPROVEMENTS, IF SUCH ITEMS ARE HIDDEN BY LANDSCAPING, OR ARE COVERED BY SUCH ITEMS AS DUMPSTERS OR TRAILERS.

10. OTHER THAN VISIBLE OBSERVATIONS NOTED HEREON, THIS SURVEY MAKES NO STATEMENT REGARDING THE ACTUAL PRESENCE OR ABSENCE OF ANY SERVICE OR UTILITY LINE. CONTROLLED UNDERGROUND EXPLORATORY EFFORT TOGETHER WITH "JULIE" MARKINGS IS RECOMMENDED TO DETERMINE THE FULL EXTENT OF UNDERGROUND SERVICE AND UTILITY LINES. CONTACT J.U.L.I.E. AT 1-800-892-0123.

11. RESTRICTIONS THAT MAY BE FOUND IN LOCAL BUILDING AND/OR ZONING CODES HAVE NOT BEEN SHOWN. HEIGHT AND BULK RESTRICTIONS (IF ANY) HAVE NOT BEEN SHOWN. ONLY THOSE SETBACK RESTRICTIONS SHOWN ON THE RECORDED SUBDIVISION PLAT OR IN THE TITLE COMMITMENT HAVE BEEN SHOWN.

12. CHICAGO TITLE INSURANCE COMPANY COMMITMENT NO. 1401 008488276 D2 WITH AN EFFECTIVE DATE OF JUNE 30, 2014 AND A PRINTED DATE OF JULY 17, 2014 HAS BEEN REVIEWED IN CONJUNCTION WITH THE PREPARATION OF THIS SURVEY. THIS SURVEY MAY NOT REFLECT MATTERS OF TITLE THAT MAY BENEFIT OR BURDEN THE PROPERTY UNLESS THEY ARE EVIDENT.

13. (EXCEPTION C) LOT 29 OF THE SURVEY PROPERTY IS NO LONGER SUBJECT TO A BUILDING LINE SETBACK GRANTED BY THE NORTHGATE INDUSTRIAL CENTER PLAT RECORDED FEBRUARY 16, 1978 AS DOCUMENT NUMBER 24329400. SAID BUILDING SETBACK LINE WAS VACATED BY ABROGATION AND CONSENT AGREEMENT RECORDED AS DOCUMENT NUMBER 24692684. (SEE DOCUMENT FOR PARTICULARS)

AN ORDINANCE WAS GRANTED WHICH REVISED THE REQUIRED BUILDING SETBACK FROM 90 FEET TO 40.75 FEET FROM THE CENTERLINE OF THE ROAD WHICH AFFECTS LOT 27 AND 28 IN NORTHGATE INDUSTRIAL CENTER. THE LOCATION OF SAID SETBACK LINE HAS NOT BEEN PLOTTED HEREON. THE EXACT LOCATION COULD NOT BE DETERMINED BECAUSE OF AMBIGUITY IN THE LOCATION OF THE CENTERLINE OF THE ROAD. REDUCED THE REQUIRED SQUARE FEET OF LOT 28 IN NORTHGATE INDUSTRIAL CENTER FROM 20,000 SQUARE FEET TO 19,000 SQUARE FEET. (SEE DOCUMENT FOR PARTICULARS-WE HAVE NOT BEEN PROVIDED A RECORD COPY OF SAID ORDINANCE)

14. (EXCEPTION E) THE SURVEY PROPERTY IS SUBJECT TO AN APPEND TO THE NORTHGATE INDUSTRIAL CENTER IN WHICH THE DEPARTMENT OF TRANSPORTATION STATED THAT OUTLOT 1, AND LOTS 26, 27, AND 29 ARE SUBJECT TO FLOOD RISK BUT THERE IS SUFFICIENT AREA ON LOTS 26, 27 AND 29 FOR DEVELOPMENT. (SEE DOCUMENT FOR PARTICULARS)

15. (EXCEPTION G) THE SURVEY PROPERTY IS SUBJECT TO A NOTICE OF REQUIREMENT FOR STORM WATER DETENTION RECORDED MARCH 22, 1978 AS DOCUMENT NUMBER 24373164 WHICH REQUIRES ANY DEVELOPMENT OVER 5 ACRES TO SUBMIT STORM WATER CALCULATION TO METROPOLITAN SANITARY DISTRICT OF GREATER CHICAGO.

16. (EXCEPTION H-11) THE SURVEY PROPERTY MAY BE SUBJECT TO ASSIGNMENT OF RENTS RECORDED FEBRUARY 18, 2005 AS DOCUMENT NO. 0504916161 MADE BY LASALLE BANK NATIONAL ASSOCIATION, SUCCESSOR TRUSTEE, AS TRUSTEE UNDER TRUST AGREEMENT DATED NOVEMBER 20, 1974 AND KNOWN AS TRUST NUMBER 90701 TO HARRIS TRUST AND SAVINGS BANK. THE ABOVE DESCRIBED DOCUMENT HAS NOT BEEN PROVIDED TO THE SURVEYOR FOR REVIEW. EASEMENTS AND/OR RESTRICTIONS, IF ANY, HAVE NOT BEEN SHOWN OR NOTED HEREON.

FLOOD HAZARD NOTE:

THE FEDERAL EMERGENCY MANAGEMENT AGENCY FIRM COMMUNITY PANEL NUMBER 17031C0068J E WITH AN EFFECTIVE DATE OF AUGUST 19, 2008 INDICATES THAT THE ABOVE DESCRIBED PROPERTY LIES WITHIN AN AREA DESIGNATED AS ZONE X (UNSHADED), ZONE X (SHADED), SPECIAL FLOOD HAZARD AREA AND FLOODWAY AREAS IN ZONE AE, ZONE X (UNSHADED) IS DEFINED AS AREAS DETERMINED TO BE OUTSIDE THE 0.2% ANNUAL CHANCE FLOODPLAIN , ZONE X (SHADED) IS DEFINED AS AREAS OF 0.2% ANNUAL CHANCE FLOOD; AREAS OF 1% ANNUAL CHANCE FLOOD WITH AVERAGE DEPTHS OF LESS THAN 1 FOOT OR WITH DRAINAGE AREAS LESS THAN 1 SQUARE MILE; AND AREAS PROTECTED BY LEVEES FROM 1 % ANNUAL CHANCE FLOOD, SPECIAL FLOOD HAZARD AREAS (SFHAs) SUBJECT TO INUNDATION BY THE 1% ANNUAL CHANCE FLOOD, AND FLOODWAY AREAS IN ZONE AE IS DEFINED AS THE FLOODWAY IS THE CHANNEL OF A STREAM PLUS ANY ADJACENT FLOODPLAIN ARES THAT MUST BE KEPT FREE OF ENCROACHMENTS SO THAT THE 1% ANNUAL CHANCE FLOOD CAN BE CARRIED WITHOUT SUBSTANTIAL INCREASE IN FLOOD HEIGHTS PER THE FLOOD INSURANCE RATE MAPS. THIS MAP DOES NOT NECESSARILY SHOW ALL AREAS SUBJECT TO FLOODING IN THE COMMUNITY OR ALL PLANIMETRIC FEATURES OUTSIDE SPECIAL FLOOD HAZARD AREAS. THIS DOES NOT GUARANTEE THAT THE SURVEYED PROPERTY WILL OR WILL NOT FLOOD.

APPROXIMATE AREAS OF FLOOD ZONES HAVE BEEN SHOWN HEREON BASED ON SAID FIRM MAP, HOWEVER THE THE EXACT LOCATION HAS NOT BEEN DETERMINED

SURVEYOR CERTIFICATE:

Exhibit received April 14, 2016

STATE OF ILLINOIS)
) SS
COUNTY OF LAKE)

CERTIFIED TO : CHICAGO TITLE INSURANCE COMPANY
AND : NORTHGATE OWNER, LLC
AND : FIFTH THIRD BANK
AND : CHICAGO LAND TRUST COMPANY (TRUST NUMBER 90701)

THIS IS TO CERTIFY THAT THIS MAP OR PLAT AND THE SURVEY ON WHICH IT IS BASED WERE MADE IN ACCORDANCE WITH THE 2011 MINIMUM STANDARD DETAIL REQUIREMENTS FOR ALTA/ACSM LAND TITLE SURVEYS, JOINTLY ESTABLISHED AND ADOPTED BY ALTA AND NSPS, AND INCLUDES ITEMS 1, 2, 3, 4, 7(a), 7(b) 8, 9, AND 11(a) OF TABLE A THEREOF.
THE FIELD WORK FOR LOTS 27 AND 29 WAS COMPLETED ON FEBRUARY 21, 2013.
THE FIELD WORK FOR LOT 28 WAS COMPLETED ON MAY 2, 2013.

DATE OF PLAT OR MAP: AUGUST 21, 2014.

ILLINOIS PROFESSIONAL LAND SURVEYOR NO. 3855
LICENSE EXPIRES NOVEMBER 30, 2014

DESIGN FIRM PROFESSIONAL LICENSE NO. 184003350
LICENSE EXPIRES APRIL 30, 2015

ERIC R. VESELY ILLINOIS PROFESSIONAL LAND SURVEYOR NO. 3855 VERNON HILLS, ILLINOIS

DATE	REVISIONS	DRAWN BY
08/21/14	REVISED PER NEW CERTIFIED PARTIES	ERV

Manhard CONSULTING LTD
900 Woodlands Parkway, Vernon Hills, IL 60061 ph:847.634.5550 fx:847.634.0095 manhard.com
Civil Engineers • Surveyors • Water Resource Engineers • Water & Wastewater Engineers
Construction Managers • Environmental Scientists • Landscape Architects • Planners

250 NORTHGATE PARKWAY
WHEELING, ILLINOIS
ALTA/ACSM LAND TITLE SURVEY

PROJ. MGR.: TWB
PROJ. ASSOC.: ERV
DRAWN BY: ERV
DATE: 07/29/14
SCALE: 1"=50'
SHEET 1 OF 1
KNZWH 120427

© 2014 MANHARD CONSULTING, LTD. ALL RIGHTS RESERVED

August 21, 2014 - 13:43 Dwg Name: P:\Knzwh\dwg\Surv\Final Drawings\Alta Survey\KNZWH-SA.dwg Updated By: evesely

ALTA/ACSM LAND TITLE SURVEY

LOT 234 IN ZELOSKY'S MILWAUKEE AVENUE ADDITION TO WHEELING, A SUBDIVISION IN SECTION 2, TOWNSHIP 42 NORTH, RANGE 11, EAST OF THE THIRD PRINCIPAL MERIDIAN, IN COOK COUNTY, ILLINOIS.

COMMONLY KNOWN AS: 267 NORTHGATE PARKWAY, WHEELING, ILLINOIS.
P.I.N. : 03-02-308-003-0000

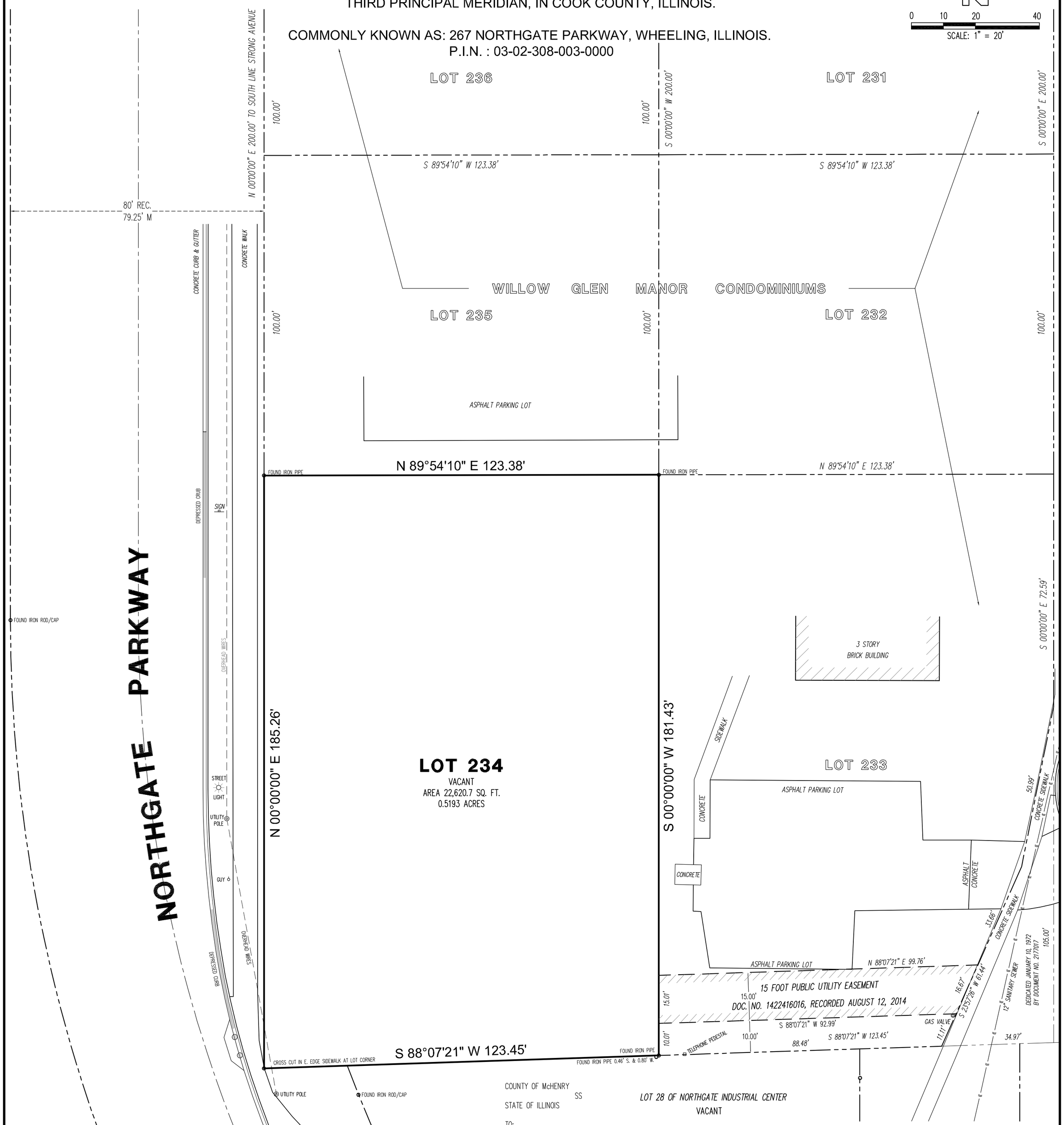

COUNTY OF McHENRY
SS
STATE OF ILLINOIS

LOT 28 OF NORTHGATE INDUSTRIAL CENTER
VACANT

TO:
-REVA DEVELOPMENT PARTNERS LLC
-CHICAGO TITLE COMPANY LLC
-FIFTH THIRD BANK, AN OHIO BANKING CORPORATION

THIS IS TO CERTIFY THAT THIS MAP OR PLAT AND THE SURVEY ON WHICH IT IS BASED WERE MADE IN ACCORDANCE WITH 2011 MINIMUM STANDARD DETAIL REQUIREMENTS FOR ALTA/ACSM LAND TITLE SURVEYS, JOINTLY ESTABLISHED AND ADOPTED BY ALTA, ACSM AND NSPS, AND INCLUDES ITEMS 1, 2, 3, 4, AND 8, OF TABLE A THEREOF. THE FIELD WORK WAS COMPLETED ON OCTOBER 27. 2015.

I FURTHER CERTIFY THAT THIS PARCEL IS NOT LOCATED IN THE SPECIAL FLOOD HAZARD AREA IDENTIFIED BY THE FEDERAL EMERGENCY MANAGEMENT AGENCY FLOOD INSURANCE RATE MAP, NUMBER 17031C0068J, MAP REVISION DATE OF AUGUST 19, 2006. ACCORDING TO THIS MAP, THE PROPERTY LIES IN UNSHADED ZONE X, AREAS DETERMINED TO BE OUTSIDE THE 0.2% ANNUAL CHANCE FLOODPLAIN. ACCORDING TO THE U.S. FISH AND WILDLIFE SERVICE NATIONAL WETLANDS INVENTORY MAPS, THERE ARE NO WETLANDS WITHIN THIS PROPERTY.

I FURTHER CERTIFY THAT THIS PROPERTY HAS DIRECT ACCESS TO NORTHGATE PARKWAY, A DEDICATED PUBLIC STREET.

Exhibit received April 14, 2016

DATE: NOVEMBER 12, 2015
JAMES E. SCHROEDER
ILLINOIS PROFESSIONAL LAND SURVEYOR NO. 3287

JAMES E. SCHROEDER
3287
PROFESSIONAL LAND SURVEYOR
OF
STATE OF ILLINOIS

LICENSE EXPIRES 11/30/2016

REVISIONS

NO.	DATE	DESCRIPTION

SCHROEDER & ASSOCIATES
1000 OAK VALLEY DRIVE - CARY, ILLINOIS 60013
TEL: 847-639-1415 CELL: 847-650-1416 JSCHR08956@AOL.COM

CLIENT: BILL HEIN	FIELD WORK COMPLETED: 10/27/15
JOB NO. 15109 (0817)	DATE: NOVEMBER 12, 2015

FINAL PLAT
OF
NORTHGATE CROSSING SUBDIVISION - PHASE 3

BEING A SUBDIVISION OF LOT 234 IN WILLIAM ZELOSKY'S MILWAUKEE AVENUE ADDITION TO WHEELING, LOT 28 IN NORTHGATE INDUSTRIAL CENTER AND THAT PART OF 12TH STREET VACATED BY DOCUMENT NUMBER 21715885, BEING A SUBDIVISION OF THAT PART OF THE WEST HALF OF THE SOUTHWEST QUARTER OF SECTION 2, TOWNSHIP 42 NORTH, RANGE 11, EAST OF THE THIRD PRINCIPAL MERIDIAN, IN COOK COUNTY, ILLINOIS.

OWNER'S CERTIFICATE

THIS IS TO CERTIFY THAT NORTHWEST OWNERS, LLC. IS THE LEGAL OWNER OF THE LAND DESCRIBED ON THE ATTACHED PLAT, AND HAS CAUSED THE SAME TO BE SURVEYED, SUBDIVIDED, DEDICATED, AND THE PLATTED AS SHOWN BY THE PLAT FOR THE USES AND PURPOSES INDICATED THEREON AND DOES HEREBY ACKNOWLEDGE AND ADOPT THE SAME UNDER THE STYLE AND TITLE THEREON INDICATED.

THIS IS TO ALSO CERTIFY THAT THE UNDERSIGNED, AS OWNER OF THE PROPERTY DESCRIBED AS THE NORTHGATE CROSSING SUBDIVISION – PHASE 3 AND LEGALLY DESCRIBED ON THE PLAT OF THE SAME NAME, HAVE DETERMINNED TO THE BEST OF OUR KNOWLEDGE THE SCHOOL DISTRICT IN WHICH EACH OF THE FOLLOWING LOTS LIE.

LOT NUMBER(S)	SCHOOL DISTRICT
ALL	GRADE SCHOOL DISTRICT NO. 21 HIGH SCHOOL DISTRICT NO. 214

DATED THIS _____ DAY OF _____, A.D., 2016.

BY: _____

_____
PRINTED NAME AND TITLE

OWNER'S NAME AND ADDRESS

NORTHEAST OWNERS LLC.
116 WEST ILLINOIS STREET, 7TH FLOOR
CHICAGO, ILLINOIS 60654

NOTARY PUBLIC

STATE OF ILLINOIS)
)S.S.
COUNTY OF COOK)

I, _____, A NOTARY PUBLIC IN AND FOR THE COUNTY AND STATE

AFORESAID, DO HEREBY CERTIFY THAT _____ WHO IS PERSONALLY KNOWN TO ME TO BE THE SAME WHOSE NAME IS SUBSCRIBED TO THE FOREGOING CERTIFICATE, APPEARED BEFORE ME THIS DAY IN PERSON AND ACKNOWLEDGED THAT THEY DID SIGN AND DELIVER THIS ANNEXED PLAT AS A FREE AND VOLUNTARY ACT FOR THE PURPOSES THEREIN SET FORTH.

GIVEN UNDER MY HAND AND NOTORIAL SEAL THIS ____ DAY OF _____, A.D., 2016.

_____
NOTARY PUBLIC

MORTGAGEE CONSENT

STATE OF ILLINOIS)
)SS
COUNTY OF _____)

THE UNDERSIGNED, THE PRIVATE BANK AND TRUST COMPANY AS MORTGAGEE, UNDER THE PROVISIONS OF CERTAIN MORTGAGE DATED _____ AND RECORDED IN THE RECORDER'S OFFICE OF _____, COUNTY, ILLINOIS, ON THIS _____ DAY OF _____, A.D., _____, AS DOCUMENT NUMBER _____, HEREBY CONSENTS TO THE SUBDIVISION STATED HEREIN.

DATED: _____, A.D., 2016.

BY: _____

_____
PRINTED NAME

ITS: _____

MORTGAGEE'S NAME AND ADDRESS

_____
_____
_____
_____

MORTGAGEE NOTARY PUBLIC

STATE OF ILLINOIS)
)SS
COUNTY OF _____)

I, _____, A NOTARY PUBLIC IN AND FOR THE COUNTY AND STATE AFORESAID, DO HEREBY CERTIFY THAT _____ AND _____ OF _____ PERSONALLY KNOWN TO ME TO BE THE SAME WHOSE NAMES ARE SUBSCRIBED TO THE ABOVE CERTIFICATE, APPEARED BEFORE ME THIS DAY IN PERSON AND ACKNOWLEDGED THAT THEY DID SIGN THE ABOVE CERTIFICATE AS HIS (THEIR) OWN FREE AND VOLUNTARY ACT AND DEED FOR THE USES AND PURPOSES THEREIN SET FORTH.
GIVEN UNDER MY HAND AND NOTORIAL SEAL THIS ___ DAY OF _____, A.D. 2016.

_____
NOTARY PUBLIC

DRAINAGE STATEMENT

TO THE BEST OF OUR KNOWLEDGE AND BELIEF, THE DRAINAGE OF SURFACE WATERS WILL NOT BE CHANGED BY THE CONSTRUCTION OF THIS SUBDIVISION OR ANY PART THEREOF, OR THAT IF SUCH SURFACE WATER DRAINAGE WILL BE CHANGED, REASONABLE PROVISIONS HAVE BEEN MADE FOR COLLECTION AND DIVERSION OF SUCH SURFACE WATERS INTO PUBLIC AREAS OR DRAINS WHICH THE SUBDIVIDER HAS A RIGHT TO USE, AND THAT SUCH SURFACE WATERS WILL BE PLANNED FOR IN ACCORDANCE WITH GENERALLY ACCEPTED ENGINEERING PRACTICES SO AS TO REDUCE THE LIKELIHOOD OF DAMAGE TO THE ADJOINING PROPERTY BECAUSE OF THE CONSTRUCTION OF THE SUBDIVISION.

DATED THIS _____ DAY OF _____, A.D., 2016.

BY: _____
OWNER/ATTORNEY

_____
JEREMEY FOSS, P.E.
MANHARD CONSULTING, LTD.
900 WOODLANDS PARKWAY
VERNON HILLS, IL 60061

JEREMY D. FOSS
062-058310
LICENSED PROFESSIONAL ENGINEER OF ILLINOIS

OWNER'S NAME AND ADDRESS

NORTHEAST OWNERS LLC.
116 WEST ILLINOIS STREET, 7TH FLOOR
CHICAGO, ILLINOIS 60654

VILLAGE COLLECTOR CERTIFICATE

STATE OF ILLINOIS)
)SS
COUNTY OF COOK)

I, _____, VILLAGE COLLECTOR FOR THE VILLAGE OF WHEELING, ILLINOIS, DO HEREBY CERTIFY THAT THERE ARE NO DELINQUENT OR UNPAID CURRENT OR FORFEITED SPECIAL ASSESSMENTS OF ANY DEFERRED INSTALLMENTS THEREOF THAT HAVE NOT BEEN APPORTIONED AGAINST THE TRACT, INCLUDED IN THE PLAT.

DATED AT WHEELING, COOK COUNTY, ILLINOIS, THIS ___ DAY OF _____, A.D. 2015.

_____
VILLAGE COLLECTOR

VILLAGE BOARD OF TRUSTEES CERTIFICATE

STATE OF ILLINOIS)
)SS
COUNTY OF COOK)

THIS IS TO CERTIFY THAT THE VILLAGE BOARD OF TRUSTEES OF THE VILLAGE OF WHEELING, ILLINOIS, HAVE REVIEWED AND APPROVED THIS PLAT.

DATED AT WHEELING, COOK COUNTY, ILLINOIS, THIS ____ DAY OF

_____, A.D. 2015.

_____
VILLAGE PRESIDENT/MAYOR

_____
VILLAGE CLERK

_____
PRINTED NAME

VILLAGE ENGINEER CERTIFICATE

STATE OF ILLINOIS)
)SS
COUNTY OF COOK)

THIS IS TO CERTIFY THAT I, _____, VILLAGE ENGINEER FOR THE VILLAGE OF WHEELING, ILLINOIS, HAVE REVIEWED AND APPROVED THIS PLAT.

DATED THIS _____ DAY OF _____, A.D. 2015

_____
VILLAGE ENGINEER

STORMWATER MANAGEMENT EASEMENT PROVISIONS

THE OBLIGATION OF MAINTAINING THE STORMWATER MANAGEMENT EASEMENTS AND THE APPURTENANCES THERETO AS DESCRIBED HEREON SHALL BE THAT OF THE OWNER, ENTITY OR ITS SUCCESSORS AND ASSIGNS HOLDING TITLE TO SAID THE STORMWATER MANAGEMENT EASEMENTS. HOWEVER, THE VILLAGE OF WHEELING SHALL HAVE THE RIGHT PURSUANT TO THIS GRANT OF EASEMENT, BUT NOT THE OBLIGATION, TO ENTER THE PREMISES DESCRIBED HEREON AS THE STORMWATER MANAGEMENT EASEMENTS AT ANY TIME IT DEEMS NECESSARY TO INSPECT, REPAIR OR MAINTAIN DETENTION/RETENTION FACILITY, INCLUDING THE APPURTENANCES THERETO, WHICH THE OWNER OR HOMEOWNER'S ASSOCIATION FAILS OR REFUSES TO MAINTAIN, FOLLOWING WRITTEN NOTICE TO DO SO FROM THE VILLAGE. IN THE EVENT OF PERFORMANCE BY THE VILLAGE OR ITS AGENTS OF ANY SUCH REPAIR OR MAINTENANCE WORK, THE COST THEREOF (INCLUDING BOTH DIRECT AND INDIRECT COSTS) SHALL BE PAID BY THE OWNER OR HOMEOWNER'S ASSOCIATION, OR THE INDIVIDUAL MEMBERS OR SHARE HOLDERS OF THE HOMEOWNER'S ASSOCIATION, AND SHALL CONSTITUTE A LIEN UPON THE ABOVE-DESCRIBED THE STORMWATER MANAGEMENT EASEMENTS AND THE ADJACENT ENTIRE REAL ESTATE WHICH THE DETENTION/RETENTION FACILITY AND APPURTENANCES SERVE. SUCH LIEN MAY BE ENFORCED BY THE VILLAGE, WHICH MAY ALSO RECOVER ALL REASONABLE COSTS AND ATTORNEY'S FEES IN DOING SO, IN THE MANNER PROVIDED BY LAW, OR ENFORCEMENT AND FORECLOSURE OF LIENS.

SURVEY PREPARED FOR

NORTHWEST OWNERS, LLC.
CARE OF:
REVA DEVELOPMENT PARTNERS LLC
116 WEST ILLINOIS STREET
CHICAGO, ILLINOIS 60654

SUBMITTED BY/RETURN TO:

NORTHWEST OWNERS, LLC.
CARE OF:
REVA DEVELOPMENT PARTNERS LLC
116 WEST ILLINOIS STREET
CHICAGO, ILLINOIS 60654

PIN'S

03-02-308-003
03-02-308-007
03-02-308-008

ACCESS NOTES

1. LOT 1 SHALL NOT HAVE VEHICULAR ACCESS TO NORTHGATE PARKWAY.
2. LOT 1 SHALL HAVE FULL ACCESS TO 12TH STREET.

BLANKET UTILITY EASEMENT (B.U.E.) PROVISIONS

AN EASEMENT IS HEREBY RESERVED AND GRANTED OVER AND UNDER ALL OF THE SUBDIVISION OUTSIDE OF THE BUILDING AREAS TO THE VILLAGE OF WHEELING, COMMONWEALTH EDISON COMPANY, NICOR GAS, AT&T CORPORATION AND TO THE LOCAL FRANCHISED CABLE COMPANY, TOGETHER WITH THEIR RESPECTIVE SUCCESSORS AND ASSIGNS, TO INSTALL, LAY, CONSTRUCT, RENEW, OPERATE AND MAINTAIN, CONDUITS, CABLES, WIRES AND PIPES, WITH ALL OF NECESSARY POLES, TRANSFORMERS, MANHOLES AND OTHER EQUIPMENT FOR THE PURPOSE OF SERVING THE SAID REAL ESTATE WITH ELECTRIC, GAS, CABLE TELEVISION TRANSMISSIONS AND THE OTHER MUNICIPAL SERVICES. ALSO THERE IS HEREBY GRANTED THE RIGHT TO ENTER UPON THE SAID REAL ESTATE AT ALL TIMES TO INSTALL, LAY, CONSTRUCT, RENEW, OPERATE AND MAINTAIN WITHIN THE SAID REAL ESTATE SAID CONDUITS, CABLES, WIRES, MANHOLES, POLES, TRANSFORMERS AND OTHER EQUIPMENT. THE RIGHT OF INGRESS AND EGRESS IS HEREBY GRANTED OVER, UPON AND THROUGH THE SAID REAL ESTATE FOR EMERGENCY VEHICLES OF ANY AND ALL TYPES, FOR ANY PURPOSE WHATSOEVER. SAID AREAS MAY BE USED FOR SIDEWALKS, PATIOS, DRIVEWAYS, GARDENS, SHRUBS, LANDSCAPING AND SUCH OTHER PURPOSES THAT THEN AND LATER DO NOT UNREASONABLY INTERFERE WITH THE USES OR THE RIGHTS OF HEREIN GRANTED, NO PERSON, HOWEVER, SHALL CONSTRUCT OR MAINTAIN ANY LANDSCAPING MATERIALS THAT WOULD INTERFERE WITH ANY RIGHTS HEREIN GRANTED TO THE VILLAGE OF WHEELING.

STORM SEWER & WATERMAIN EASEMENT PROVISIONS

AN NON-EXCLUSIVE PERPETUAL EASEMENT IS HEREBY RESERVED AND GRANTED TO THE VILLAGE OF WHEELING, ITS SUCCESSORS AND ASSIGNS, OVER ALL AREAS DESIGNATED "STORM SEWER EASEMENT" AND/OR "WATERMAIN EASEMENT" ON THE PLAT TO CONSTRUCT, RECONSTRUCT, REPAIR, INSPECT, MAINTAIN AND OPERATE VARIOUS WATER DISTRIBUTION AND STORM SEWER COLLECTION SYSTEMS, INCLUDING BUT NOT LIMITED TO WATER LINES AND STORM SEWERS AND SERVICE CONNECTIONS, TOGETHER WITH ANY AND ALL NECESSARY VALVE VAULTS, FIRE HYDRANTS, MANHOLES, AND OTHER STRUCTURES AND APPURTENANCES AS MAY BE DEEMED NECESSARY, IN, OVER, UPON, ACROSS, ALONG, UNDER AND THROUGH THE SURFACE OF THE PROPERTY SHOWN ON THE PLAT, TOGETHER WITH THE RIGHT OF ACCESS FOR NECESSARY LABOR, MATERIALS AND EQUIPMENT TO DO ANY OF THE ABOVE WORK AND THE RIGHT TO INSTALL REQUIRED SERVICE CONNECTIONS OVER OR UNDER THE SURFACE TO SERVE THE IMPROVEMENTS THEREON. THE RIGHT IS ALSO GRANTED TO CUT DOWN, TRIM OR REMOVE, WITHOUT OBLIGATION TO RESTORE OR REPLACE ANY OBSTRUCTION, INCLUDING BUT NOT LIMITED TO TREES, SHRUBS, OTHER PLANTS, BUSHES, ROOTS, STRUCTURES OR IMPROVEMENTS ON THE EASEMENT THAT INTERFERE WITH THE OPERATION OF GRANTEES' FACILITIES. NO PERMANENT BUILDINGS OR STRUCTURES SHALL BE PLACED ON SAID EASEMENT, BUT SAME MAY BE USED FOR GARDENS, LANDSCAPE AREAS, AND OTHER PURPOSES THAT DO NOT THEN OR LATER INTERFERE WITH THE AFORESAID USES OR RIGHTS. WHERE AN EASEMENT IS USED FOR BOTH SEWER AND OTHER UTILITIES, THE OTHER UTILITY INSTALLATION SHALL BE SUBJECT TO THE ORDINANCE OF THE VILLAGE OF WHEELING AND TO THE VILLAGE APPROVAL AS TO DESIGN AND LOCATION.

SIDEWALK EASEMENT PROVISIONS

THE SIDEWALK EASEMENT HEREON SHOWN IS HEREBY RESERVED FOR AND GRANTED TO THE VILLAGE OF WHEELING, ITS SUCCESSORS AND ASSIGNS FOR THE USE AND BENEFIT OF THE PUBLIC TO OPERATE, MAINTAIN, AND REMOVE, FROM TIME TO TIME, SIDEWALKS ACROSS, ALONG AND UPON THE SURFACE OF THE PROPERTY CONTAINED WITHIN THE DASHED LINED SHOWN HEREON. ALSO GRANTED HEREWITH IS THE RIGHT TO CUT, TRIM OR REMOVE TREES, BUSHES AND ROOTS AS MAY BE REASONABLY REQUIRED INCIDENT TO THE RIGHTS HEREIN GIVEN, AND THE RIGHT, BUT NOT THE DUTY TO ENTER UPON THE SUBDIVIDED PROPERTY FOR ALL SUCH PURPOSES. OBSTRUCTIONS SHALL NOT BE PLACED OVER GRANTEE'S FACILITIES OR IN, UPON OR OVER THE PROPERTY WITHIN THE EASEMENTS WITHOUT THE PRIOR WRITTEN CONSENT OF GRANTEES. AFTER INSTALLATION OF ANY SUCH FACILITIES, THE GRADE OF THE PROPERTY SHALL NOT BE ALTERED IN A MANNER SO AS TO INTERFERE WITH THE PROPER OPERATION AND MAINTENANCE THEREOF. THE VILLAGE OF WHEELING SHALL HAVE AND BE ENTITLED TO A LEGALLY ENFORCEABLE LIEN FOR THE COST OF SUCH MAINTENANCE AND REPAIRS UPON THE SUBDIVISION. THE PROPERTY OWNER'S ASSOCIATION, AND/OR OWNER, SHALL BE LIABLE FOR ANY AND ALL COSTS INCURRED IN ANY SUCH WORK AND/OR REPAIR. THE VILLAGE OF WHEELING MAY RECOVER THE COST OF SUCH WORK AND/OR REPAIRS, BY THE FORECLOSURE OF ITS LIEN, AND SHALL ALSO BE ENTITLED TO RECOVER ITS COSTS AND ATTORNEY'S FEES. THE PERFORMANCE OF ANY WORK BY THE VILLAGE OF WHEELING ON ANY SUBDIVISION PARCEL FOR WHICH AN EASEMENT IS GRANTED TO THE VILLAGE FOR "SIDEWALK EASEMENT PROVISIONS" OR OTHER PUBLIC PURPOSES SHALL NOT CONSTITUTE ACCEPTANCE OF SUCH AREAS AS PUBLIC PROPERTY NOR BE DEEMED TO BE A TACIT DEDICATION THEREOF."

COOK COUNTY RECORDER CERTIFICATE (TO BE STAMPED BY THE COOK COUNTY RECORDER)

COOK COUNTY CLERK CERTIFICATE (TO BE STAMPED BY THE COOK COUNTY CLERK)

PERMISSION TO RECORD

STATE OF ILLINOIS)
)SS
COUNTY OF _____)

I, ERIC R. VESELY, AN ILLINOIS PROFESSIONAL LAND SURVEYOR, HEREBY GRANT PERMISSION TO THE OWNERS REPRESENTATIVE TO RECORD THIS PLAT ON OR BEFORE JUNE 30, 2016. THE REPRESENTATIVE SHALL PROVIDE THIS SURVEYOR WITH A RECORDED COPY OF THIS PLAT.

DATED THIS ____ DAY OF _____, A.D. 2016.

FOR REVIEW ONLY

ILLINOIS PROFESSIONAL LAND SURVEYOR NO. 3855
LICENSE EXPIRES NOVEMBER 30, 2016

ERIC R. VESELY
ILLINOIS PROFESSIONAL LAND SURVEYOR NO. 3855
VERNON HILLS, ILLINOIS

SURVEYORS CERTIFICATE

STATE OF ILLINOIS)
)SS
COUNTY OF LAKE)

THIS IS TO DECLARE THAT THE PROPERTY DESCRIBED HEREON WAS SURVEYED AND SUBDIVIDED BY MANHARD CONSULTING, LTD., UNDER THE SUPERVISION OF AN ILLINOIS PROFESSIONAL LAND SURVEYOR AND THAT THE PLAT HEREON DRAWN IS A CORRECT REPRESENTATION OF SAID SURVEY AND SUBDIVISION:

PARCEL 1:
LOT 234 IN WILLIAM ZELOSKY'S MILWAUKEE AVENUE ADDITION TO WHEELING, BEING A SUBDIVISION IN SECTION 2, TOWNSHIP 42 NORTH, RANGE 11, EAST OF THE THIRD PRINCIPAL MERIDIAN, ACCORDING TO THE PLAT THEREOF RECORDED FEBRUARY 13, 1925 AS DOCUMENT NO 8773829 ALL IN COOK COUNTY, ILLINOIS.

PARCEL 2:
LOT 28 IN NORTHGATE INDUSTRIAL CENTER, BEING A SUBDIVISION IN PART OF SECTIONS 2 AND 3, TOWNSHIP 42 NORTH, RANGE 11, EAST OF THE THIRD PRINCIPAL MERIDIAN, ACCORDING TO THE PLAT THEREOF RECORDED FEBRUARY 16, 1978 AS DOCUMENT NO 24329400 ALL IN COOK COUNTY, ILLINOIS.

PARCEL 3:
THAT PART OF VACATED 12TH STREET LYING EAST OF AND ADJOINING LOT 28 IN NORTHGATE INDUSTRIAL CENTER AFORESAID, AS VACATED BY ORDINANCE RECORDED NOVEMBER 18, 1971 AS DOCUMENT 21715885.

SUBDIVIDED PROPERTY CONTAINS 1.017 ACRES, MORE OR LESS AND ALL DISTANCES ARE SHOWN IN FEET AND DECIMAL PARTS THEREOF.

THIS IS ALSO TO DECLARE THAT THE PROPERTY AS DESCRIBED ON THE ANNEXED PLAT LIES WITHIN THE CORPORATE LIMITS OF THE VILLLAGE OF WHEELING, COOK COUNTY, ILLINOIS WHICH HAS ADOPTED A VILLAGE PLAN AND IS EXERCISING THE SPECIAL POWER AUTHORIZED BY 65 ILCS 5, SECTION 11-12-6.

5/8" DIAMETER BY 24" LONG IRON RODS WILL BE SET AT ALL SUBDIVISION CORNERS, LOT CORNERS, POINTS OF CURVATURE AND POINTS OF TANGENCY IN COMPLIANCE WITH ILLINOIS STATUTES AND APPLICABLE ORDINANCES, UNLESS OTHERWISE NOTED.

THIS IS ALSO TO DECLARE THAT THE FEDERAL EMERGENCY MANAGEMENT AGENCY FIRM COMMUNITY PANEL NUMBER 17031C0068J E WITH AN EFFECTIVE DATE OF AUGUST 19, 2008 INDICATES THAT THE ABOVE DESCRIBED PROPERTY LIES WITHIN AN AREA DESIGNATED AS ZONE X (UNSHADED) AND ZONE X (SHADED), DETERMINED TO BE OUTSIDE THE 0.2% ANNUAL CHANCE FLOODPLAIN AND ZONE X (SHADED) AND ZONE X (UNSHADED) IS DEFINED AS AREAS OF 0.2% ANNUAL CHANCE FLOOD; AREAS OF 1% ANNUAL CHANCE FLOOD WITH AVERAGE DEPTHS OF LESS THAN 1 FOOT OR WITH DRAINAGE AREAS LESS THAN 1 SQUARE MILE; AND AREAS PROTECTED BY LEVEES FROM 1 % ANNUAL CHANCE FLOOD, PER THE FLOOD INSURANCE RATE MAPS. THIS MAP DOES NOT NECESSARILY SHOW ALL AREAS SUBJECT TO FLOODING IN THE COMMUNITY OR ALL PLANIMETRIC FEATURES OUTSIDE SPECIAL FLOOD HAZARD AREAS. THIS DOES NOT GUARANTEE THAT THE SURVEYED PROPERTY WILL OR WILL NOT FLOOD.

GIVEN UNDER MY HAND AND SEAL THIS _____ DAY OF _____, A.D. 2016.

FOR REVIEW ONLY

ILLINOIS PROFESSIONAL LAND SURVEYOR NO. 3855
LICENSE EXPIRES NOVEMBER 30, 2016

DESIGN FIRM PROFESSIONAL REGISTRATION
NO. 184003350-EXPIRES APRIL 30, 2017

ERIC R. VESELY
ILLINOIS PROFESSIONAL LAND SURVEYOR NO. 3855
VERNON HILLS, ILLINOIS

Exhibit received May 17, 2016

DATE	REVISIONS	DRAWN BY
05/17/16	REVISED PER VILLAGE REVIEW	SJK
04/14/16	REVISED PER VILLAGE REVIEW	SJK

Manhard CONSULTING LTD
900 Woodlands Parkway, Vernon Hills, IL 60061 ph:847.634.5550 fx:847.634.0095 manhard.com
Civil Engineers • Water Resource Engineers • Surveyors • Water & Wastewater Engineers
Construction Managers • Environmental Scientists • Landscape Architects • Planners

NORTHGATE CROSSING SUBDIVISION - PHASE 3
WHEELING, ILLINOIS
FINAL PLAT OF SUBDIVISION

PROJ. MGR.:	JDF
PROJ. ASSOC.:	ERV
DRAWN BY:	SJK
DATE:	12/08/15
SCALE:	N.T.S.

SHEET 2 OF 2

KNZWH

© 2012 MANHARD CONSULTING, LTD. ALL RIGHTS RESERVED

FINAL PLAT
OF
NORTHGATE CROSSING SUBDIVISION - PHASE 3

BEING A SUBDIVISION OF LOT 234 IN WILLIAM ZELOSKY'S MILWAUKEE AVENUE ADDITION TO WHEELING, LOT 28 IN NORTHGATE INDUSTRIAL CENTER AND THAT PART OF 12TH STREET VACATED BY DOCUMENT NUMBER 21715885, BEING A SUBDIVISION OF THAT PART OF THE WEST HALF OF THE SOUTHWEST QUARTER OF SECTION 2, TOWNSHIP 42 NORTH, RANGE 11, EAST OF THE THIRD PRINCIPAL MERIDIAN, IN COOK COUNTY, ILLINOIS.

N

GRAPHIC SCALE

30 0 15 30 60 120

(IN FEET)
1 inch = 30 ft.

N.E.A. = NON-EASEMENT AREA

COOK COUNTY RECORDER CERTIFICATE (TO BE STAMPED BY THE COOK COUNTY RECORDER)

COOK COUNTY CLERK CERTIFICATE (TO BE STAMPED BY THE COOK COUNTY CLERK)

EXISTING LOT CONFIGURATION

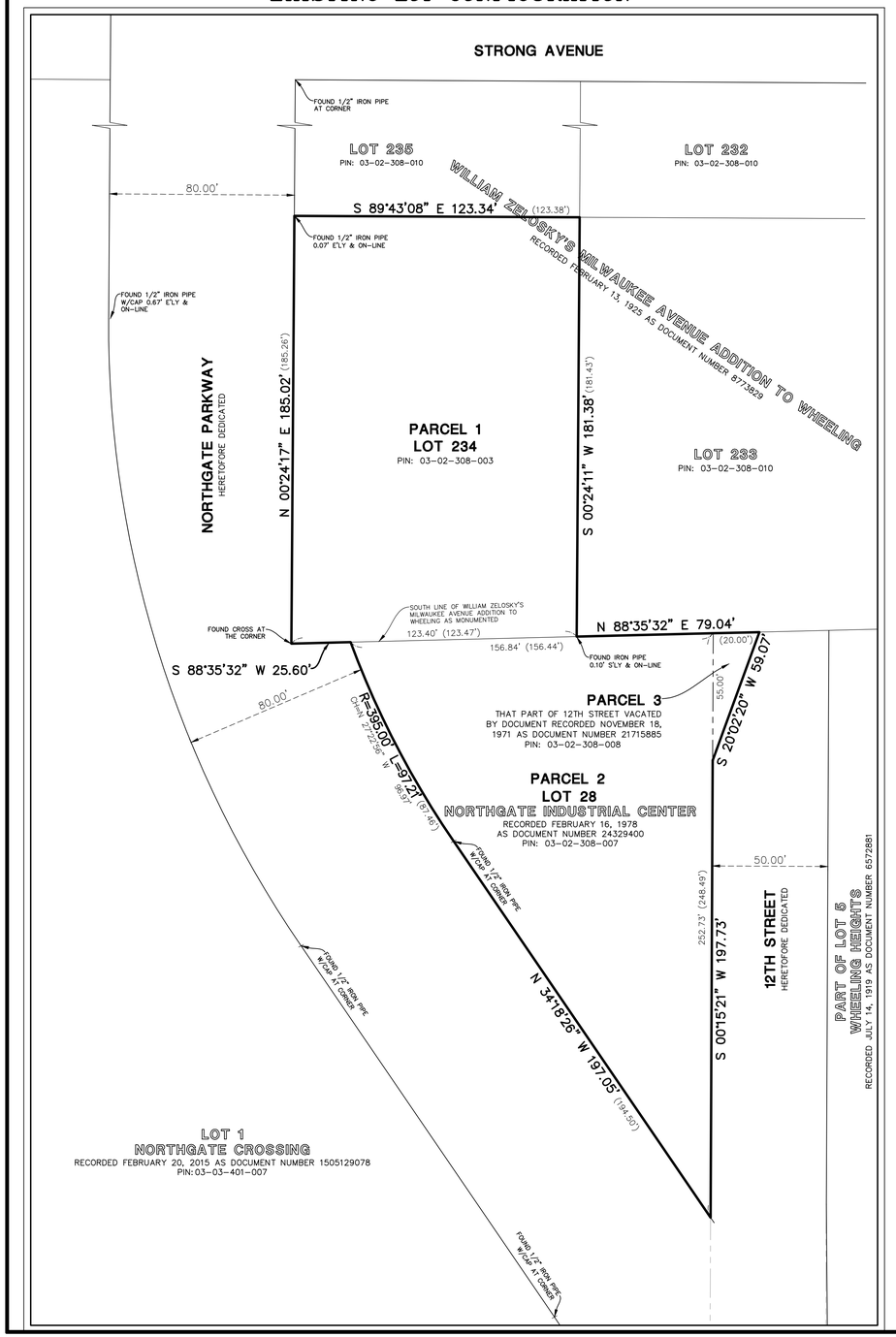

PROPOSED LOT CONFIGURATION

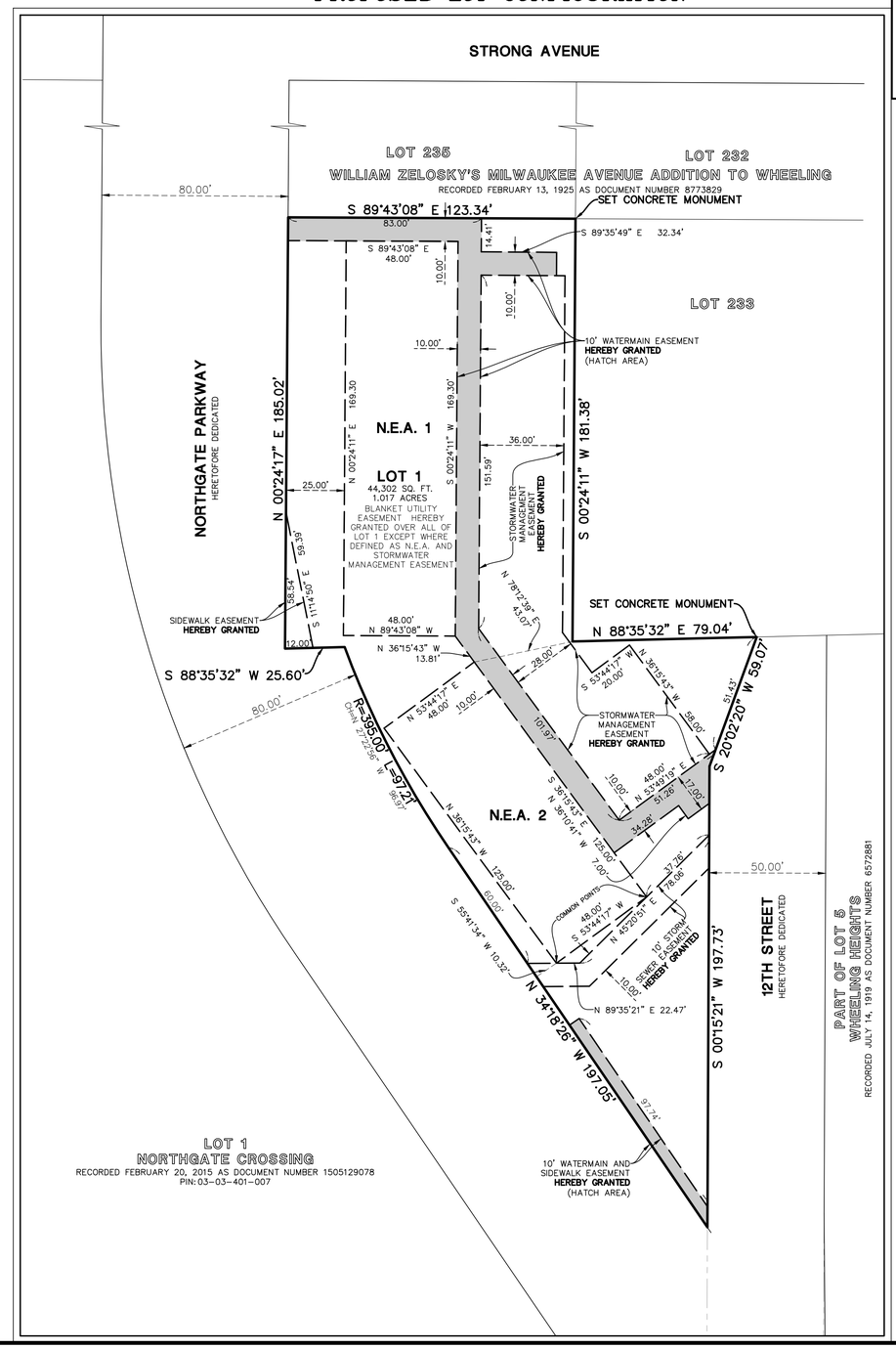

BASIS OF BEARINGS

BEARINGS ARE BASED UPON THE ILLINOIS STATE PLANE COORDINATE SYSTEM OF 1983, EAST ZONE-2007 ADJUSTMENT, ADJUSTED TO GROUND VALUES, AS ESTABLISHED UTILIZING TRIMBLE VRS REAL-TIME KINEMATIC (RTK) GLOBAL NAVIGATION SATELLITE SYSTEM (GNSS)

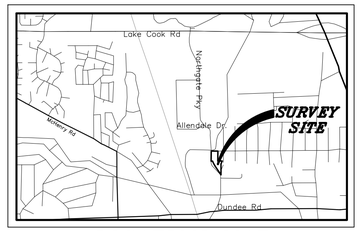

LOCATION MAP

NOT TO SCALE

EXISTING PROPERTY AREA

PARCEL 1 = 22,596 SQ. FT. (0.518 ACRES)
PARCEL 2 = 21,156 SQ. FT. (0.486 ACRES)
PARCEL 3 = 550 SQ. FT. (0.013 ACRES)
TOTAL AREA = 44,302 SQ. FT. (1.017 ACRES)

PROPOSED PROPERTY AREA

PROPOSED LOT 1 = 44,302 SQ. FT. (1.017 ACRES)

PIN'S

03-02-308-003
03-02-308-007
03-02-308-008

SHEET INDEX

SHEET 1 OF 2:	BOUNDARY INFORMATION PROPOSED LOT AND EASEMENT DETAILS
SHEET 2 OF 2:	CERTIFICATES, EASEMENT PROVISIONS AND SUBDIVISION LEGAL DESCRIPTION

SURVEYOR'S NOTES

1. DISTANCES ARE MARKED IN FEET AND DECIMAL PLACES THEREOF. NO DIMENSION SHALL BE ASSUMED BY SCALE MEASUREMENT HEREON. DISTANCES AND/OR BEARINGS SHOWN IN PARENTHESIS (456.67') ARE RECORD OR DEED VALUES, NOT FIELD MEASURED.

2. COMPARE THIS PLAT, LEGAL DESCRIPTION AND ALL SURVEY MONUMENTS BEFORE BUILDING, AND IMMEDIATELY REPORT ANY DISCREPANCIES TO THE SURVEYOR.

3. THIS SURVEY IS SUBJECT TO MATTERS OF TITLE, WHICH MAY BE REVEALED BY A CURRENT TITLE REPORT, EASEMENTS, SETBACKS AND OTHER RESTRICTIONS WHICH MAY BE FOUND IN A CURRENT TITLE REPORT, LOCAL ORDINANCES, DEEDS OR OTHER INSTRUMENTS OF RECORD MAY NOT BE SHOWN.

4. THIS PLAT WAS PREPARED FOR NORTHWEST OWNER'S, LLC, BASED ON A FIELD SURVEY COMPLETED ON NOVEMBER 02, 2015.

5. CORNERS HAVE BEEN MONUMENTED IN ACCORDANCE WITH THE FINAL PLAT OF SUBDIVISION.

6. THIS PROFESSIONAL SERVICE CONFORMS TO THE CURRENT ILLINOIS MINIMUM STANDARDS FOR A SUBDIVISION SURVEY. MANHARD CONSULTING LTD. IS A PROFESSIONAL DESIGN FIRM, REGISTRATION NUMBER 184003350, EXPIR

Exhibit received May 17, 2016

DATE	REVISIONS	DRAWN BY
05/17/16	REVISED PER VILLAGE REVIEW	SJK
04/14/16	REVISED PER VILLAGE REVIEW	SJK

Manhard CONSULTING LTD
900 Woodlands Parkway, Vernon Hills, IL 60061 ph:847.634.5550 fx:847.634.0089 manhard.com
Civil Engineers • Surveyors • Water Resource Engineers • Water Resource Planners
Construction Managers • Environmental Scientists • Landscape Architects • Planners

NORTHGATE CROSSING SUBDIVISION - PHASE 3
WHEELING, ILLINOIS
FINAL PLAT OF SUBDIVISION

PROJ. MGR.:	JDF
PROJ. ASSOC.:	ERV
DRAWN BY:	SJK
DATE:	12/08/15
SCALE:	1" = 30'

SHEET 1 OF 2

KNZWH

© 2012 MANHARD CONSULTING, LTD. ALL RIGHTS RESERVED

HREQUEST FOR PLAN COMMISSION ACTION
STAFF PROJECT REVIEW

TO: Chairperson Ruffatto and Members of the Wheeling Plan Commission

FROM: Andrew C. Jennings, Director of Community Development
Brooke A. Jones, Senior Planner

RE: **Docket No. 2016-12A,B&C**
The Vape Room
516 N. Milwaukee Avenue
(2016-12A) Zoning Variation to Allow Two Principal Buildings on a Single Zoning Lot
(2016-12B) Special Use-Site Plan Approval to Establish a Tavern
(2016-12C) Special Use-Site Plan Approval to Establish a Medical Research Lab

DATE OF REPORT: May 19, 2016

DATE OF MEETING: May 26, 2016

PROJECT OVERVIEW: The petitioner is seeking three zoning actions at 516 N. Milwaukee Avenue, which is zoned MXC Commercial Residential Mixed Use District. First, the petitioner is seeking a zoning variation to allow two principal structures on a single zoning lot. Second, the petitioner is requesting special use approval to allow a tavern use at the existing Vape Room retail business in the front building. Lastly, the petitioner is requesting special use approval to establish a medical research lab in the vacant rear building.

LOCATION MAP:

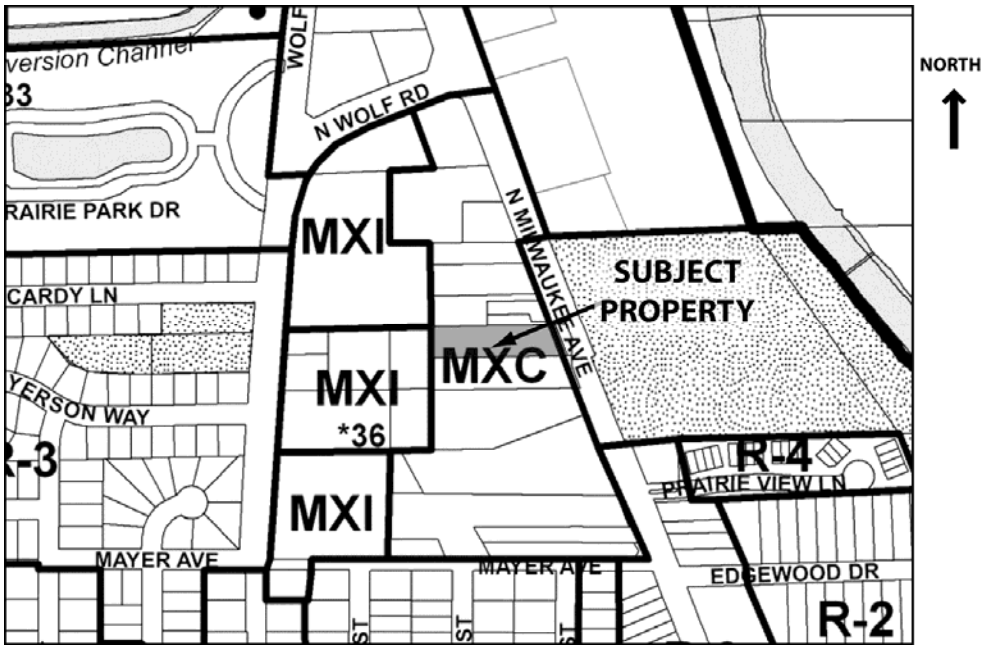

Wheeling Plan Commission
Meeting date: May 26, 2016
RE: Docket Nos. 2016-12A,B&C

GENERAL PROPERTY INFORMATION

Applicant Name:	Steve Liker, business owner
Property Owner:	Millbrook Pointe, LLC
Common Property Address:	516 N. Milwaukee Avenue
Common Location:	Located west side of Milwaukee Avenue, between Wolf Road and Mayer Avenue
Neighboring Property Land Use(s):	North: Commercial South: Commercial West: Multi-Family Residential East: Open Space – Forest Preserve
Comprehensive Plan Designation:	Commercial Residential Mixed Use
Property size:	Approximately 1.00 acre (total lot) 2,419. ft. (front building) 4,300 ft. (rear building)
Existing Use of Property:	Retail (front building) Vacant (rear building)
Proposed Use of Property:	Retail and tavern (front building) Medical research lab (rear building)
Existing Property Zoning:	MXC Commercial Residential Mixed Use
Proposed Property Zoning:	no change

Previous Zoning Action on Property:

2009-14A&B (A) Ord. No. 4467 granting SU, SP, Appearance Approval for a Sales Facility for Light Motor Vehicles (approved 9.29.2009; now expired).

(B) Ord. No. 4466 granting variations for minimum lot size and indoor display area (approved 9.29.2009; now expired).

DESCRIPTION OF PROPOSAL

There are three parts to this proposal:

1. Special use approval to add a tavern use to the existing Vape Room retail use.
2. Special use approval to establish a medical research laboratory in the rear vacant building.
3. A zoning variation to allow two principal buildings on a single zoning lot.

1. Currently, only the Vape Room operates on the subject property, which is located in the front building. This vape shop and lounge is defined as retail and is not currently allowed food or beverage service. The applicant would like approval to serve alcohol and some light snacks. As such, they are seeking a tavern special use. The Vape Room is also seeking site plan and appearance approval to install a patio for outdoor seating at the rear of the property. No hours of

operation is provided regarding this proposed use. The petitioner has indicated there will be 3 employees during peak shift.

2. The applicant is also proposing to establish a medical research laboratory in the vacant rear building. Half of the building will be used as a lab warehouse. The proposed business will not be open to the public. The business will employee three people with business hours Monday through Friday 8AM to 4PM and Saturday 8AM to noon. Two new windows and a new entry door area proposed to the front (east) side of this building. The parking lot between the two buildings will also be resurfaced and striped.

3. Lastly, the applicant is seeking a zoning variation to allow two principal buildings on a single zoning lot. By code, only one building is permitted. The rear building was previously used as storage. With the new proposal, it will be used as a medical research lab.

SITE PLAN REVIEW

Scale of Site Plan: 1" = 20' (reduced)

Proposed General Site Layout: No changes are proposed to the building footprints. The rear parking lot will be resurfaced and striped. A 10-foot by 45-foot patio is proposed at the rear of the Vape Room building.

Total Number of Parking Spaces: It shall be noted that the site plan that indicates the parking configuration between the buildings is not to scale. Therefore, some parking may be lost due to actual site conditions. The Plan Commission may wish to ask for a scaled and dimensioned site plan to indicate the proposed parking layout.

There are 21 existing parking stalls in the front parking lot. 12 parking stalls are planned for the parking lot between the buildings. Therefore the total parking provided is 33.

The parking demand for the tavern (front building) is based upon a total of 44 seats (32 patio and 12 lounge) and three employees. The parking requirement for the front building is 18 stalls.

The parking demand for the rear building is based upon the warehouse/storage use (2,200 sq. ft.) and office use (532 sq. ft.). The parking requirement for the rear building is 5 stalls.

Therefore, the total parking demand for the property is 23, which is less than the 33 stalls provided. Even if parking is lost in the rear due to constraints from meeting required parking aisle widths, parking stall widths and parking stall lengths, it is anticipated that the proposed parking provided will be adequate to meet the total parking demand from the sum of the uses of the property.

Ownership: There is no change in ownership associated with the current application.

Site Lighting: There are three existing light poles near the north property line of the front parking lot. No lighting plan has been provided for the new parking or patio area behind the

Vape Room. The Plan Commission may wish to discuss if additional lighting is proposed for the patio and rear parking lot.

Sidewalks: There is an existing public sidewalk on Milwaukee Avenue.

Bicycle parking: It does not appear that bicycle parking has been provided. Bicycle parking for 4 is required by the Code. The Plan Commission may wish to discuss options (interior or exterior) for bicycle parking with the petitioner.

Fencing: 6-foot tall wood fencing is proposed to surround the patio area. An image has been provided as an example.

APPEARANCE REVIEW

Building/Unit Size: The existing front building is approximately 2,419 square feet. The existing rear building is approximately 4,300 square feet.

Elevation Plan Review: No elevation changes are proposed to the front (Vape Room) building.

Some minor changes are proposed for the rear (laboratory) building. A new entry door and two windows are proposed for the east (front) elevation of the laboratory. The Plan Commission may wish to add a condition of approval that the. Staff has added this condition of approval to the motion.

Trash enclosure: The plans do not include a trash enclosure. There appears to be plenty of room at the rear of the property for a trash enclosure. The Plan Commission may wish to discuss the location and style with the petitioner.

LANDSCAPING PLAN REVIEW

Existing Landscaping to Remain: No changes are proposed to the front of the property or to the north side of the property, which includes lawn area and some screening from coniferous shrubs. There is a row of boxwoods at the rear of the Vape Room building. Based upon the new patio plan, it appears that the boxwoods will be removed.

Proposed Landscaping: Some landscaping is proposed for the new patio area. A row of ten "hanging baskets or flowers" is proposed outside the fencing for the west side of the patio. Six planters are also proposed for the perimeter of the patio, located within the fencing.

STANDARDS FOR SPECIAL USE (TAVERN)

Following are standards for special use with the petitioner's responses. **(Staff comments are in bold.)**

1. State why the Special Use is necessary for the public convenience at the proposed location. (Explain how the proposed use will benefit residents, the neighborhood or the community-at-large.)

   "Liquor license will benefit an existing use and increase total sales volume and tax revenue.

   The proposed use will provide more options for the those clients who desire the lounge experience at the existing retail shop.

2. State how the special use will not alter the essential character of the area in which it is to be located. (Explain how the proposed special use is appropriate for the neighborhood or shopping center and how the overall character will not be affected by the special use.)

   "The special use will not alter the existing business and similar uses are currently permitted to many businesses adjacent to the proposed location."

   The subject property is zoned mixed use commercial and residential. The proposed use is consistent with the adjacent commercial and other tavern and restaurant uses along Milwaukee Avenue.

3. State how the location and size of the Special Use, the nature and intensity of the operation involved in or conducted in connection with it, the size of the site in relation to it, and the location of the site with respect to streets giving access to it, will be in harmony with and will not impede the normal, appropriate, and orderly development of the district in which it is to be located and the development of surrounding properties. (Explain how the proposed use will allow the surrounding area to develop appropriately. Is the use too large for the site? Will it be in a location on the lot that will cause conflicts with adjacent properties? Does the use create noise, odor, smoke, or light that will affect other properties?)

   "The special use will not alter the existing business and similar uses are currently permitted to many businesses adjacent to the proposed location."

   The proposed use will not impede normal and orderly development in the district and will not cause conflicts with adjacent properties.

4. State how the location, nature and height of buildings, walls and fences, and the nature and extent of the landscaping on the site shall be such that the use will not hinder or discourage the appropriate development and use of adjacent land and buildings, or will not impair the value thereof. (Explain how the proposed use will not prevent development on adjacent properties. Will the proposed use have a negative impact on existing adjacent land uses?)

   "The building will stay unchanged. The proposed project will improve the value of the property."

   The proposed 6-foot fence and landscaping surrounding the outdoor seating will provide adequate screening from adjacent properties.

5. State how the parking areas will be of adequate size for the particular use, properly located, and suitably screened from adjoining residential uses, entrance and exit drives shall be laid out so as to prevent traffic hazards and nuisances, and the development will not cause traffic congestion. (Is adequate parking provided? Is parking area visible from adjacent homes? Are the entrance and exit drives designed for safe access to the site? Will the special use generate so much traffic as to cause congestion? Will visitors to the special use access the site through residential streets?)

   "The number of parking spaces will not be affected by the proposed project. The project will not alter the current use of the property."

   The proposed use requires 18 parking stalls, all of which is satisfied by the existing parking lot in the front of the property. The existing access drive appears adequate for the proposed use.

6. State how the property in question cannot yield a reasonable return if permitted to be used only under the conditions allowed by the regulation in that zone. (Other than the special use listed in this application, the proposal must meet all other requirements of the Zoning Code. Note any other exceptions.)

   "Currently only the front building is utilized. The income from the building in front does not generate reasonable return since property taxes are over $30,000 annually."

   In addition to the proposed tavern special use, the petitioner is requesting a special use for a medical research lab in the rear building. Moreover, the petitioner is requesting a zoning variation to allow two principal buildings on a single lot.

STANDARDS FOR SPECIAL USE (MEDICAL RESEARCH LABORATORY)

Following are standards for special use with the petitioner's responses. **(Staff comments are in bold.)**

1. State why the Special Use is necessary for the public convenience at the proposed location. (Explain how the proposed use will benefit residents, the neighborhood or the community-at-large.)

   "The proposed project will improve current building conditions and property. Improvements will include resurfacing of the parking lot. This will in turn improve the property, from being vacant to being fully operational."

   The proposed medical research lab will cause the property owners to improve the existing underutilized building and rear portion of the property.

2. State how the special use will not alter the essential character of the area in which it is to be located. (Explain how the proposed special use is appropriate for the neighborhood or shopping center and how the overall character will not be affected by the special use.)

   "The new business will operate as traditional office space. It will not draw additional traffic to the property and will not affect the neighborhood."

The subject property is zoned mixed use commercial and residential. The proposed use will primarily operate as office space and is consistent with the adjacent commercial uses along Milwaukee Avenue.

3. State how the location and size of the Special Use, the nature and intensity of the operation involved in or conducted in connection with it, the size of the site in relation to it, and the location of the site with respect to streets giving access to it, will be in harmony with and will not impede the normal, appropriate, and orderly development of the district in which it is to be located and the development of surrounding properties. (Explain how the proposed use will allow the surrounding area to develop appropriately. Is the use too large for the site? Will it be in a location on the lot that will cause conflicts with adjacent properties? Does the use create noise, odor, smoke, or light that will affect other properties?)

   "The proposed business operated with only three employees. It would not impede the normal, appropriate and orderly development of the district. The amount of parking supersedes the need and will not cause excess traffic."

   The proposed medical research lab will operate as a low intensity use with three employees during normal business hours.

4. State how the location, nature and height of buildings, walls and fences, and the nature and extent of the landscaping on the site shall be such that the use will not hinder or discourage the appropriate development and use of adjacent land and buildings, or will not impair the value thereof. (Explain how the proposed use will not prevent development on adjacent properties. Will the proposed use have a negative impact on existing adjacent land uses?)

   "The proposed project will improve the current property by improving existing property. The overall value will be increased."

   No changes to the building height, fencing, or landscaping is associated with the proposed use.

5. State how the parking areas will be of adequate size for the particular use, properly located, and suitably screened from adjoining residential uses, entrance and exit drives shall be laid out so as to prevent traffic hazards and nuisances, and the development will not cause traffic congestion. (Is adequate parking provided? Is parking area visible from adjacent homes? Are the entrance and exit drives designed for safe access to the site? Will the special use generate so much traffic as to cause congestion? Will visitors to the special use access the site through residential streets?)

   "The parking area is more than sufficient since there are only three employees and business does not provide service to the public."

   The proposed use requires 5 parking stalls, which will be satisfied by the parking improvements planned between the two buildings.

6. State how the property in question cannot yield a reasonable return if permitted to be used only under the conditions allowed by the regulation in that zone. (Other than the

special use listed in this application, the proposal must meet all other requirements of the Zoning Code. Note any other exceptions.)

"The property is currently vacant and not producing any return. The proposed project will improve the property and will generate revenue."

In addition to the proposed medical research lab special use, the petitioner is requesting a special use for a tavern in the front building. Moreover, the petitioner is requesting a zoning variation to allow two principal buildings on a single lot.

STANDARDS FOR VARIATION

Following are standards for variation with petitioner's responses. *The petitioners' response to the following questions has been shown in italics.* **Village Planner comments are in bold.**

1. State how the particular physical surroundings, shape, or topographical condition of the specific property involved would result in a practical difficulty or particular hardship upon or for the owner, lessee or occupant, as distinguished from a mere inconvenience, if the strict letter of the regulations were carried out.

   "The size and location of the property can accommodate more than one business at this location, which is not an unusual circumstance throughout the village."

   The subject property is fairly large (approximately 1 acre) for such a small principal building (2,419 sq. ft.). The existing rear warehouse building is nearly twice the size of the existing principal building.

2. Indicate how the hardship is due to unique circumstances that do not generally apply to the other properties or uses. (How is the property different from other properties with similar uses that not require a variation?)

   "There are two separate buildings located on the property that serve separate purposes. Due to current market conditions and real estate taxes associated with the property, we need to be able to lease both buildings in order to collect enough rental income pay for all expenses."

   It is unusual in a commercial district that the accessory (existing warehouse building) is larger than the principal (Vape Room) building.

3. Describe how the alleged difficulty or hardship has not been created by any person presently having an interest in the property. (Is the problem or hardship a result of actions taken by the applicant?)

   "*This is definitely not a result of any action taken by the applicant."*

   The petitioner purchased the property in its current configuration with the existing two buildings.

4. State how the property in question cannot yield a reasonable return if permitted to be used only under the conditions allowed by the regulations in that zone.

"There are two separate buildings located on the property that serve separate purposes. Due to current market conditions and real estate taxes associated with the property, we need to be able to lease both buildings in order to collect enough rental income pay for all expenses."

Without the variation, the applicant cannot be approved for the additional special use (medical research lab) in the rear building.

5. State how the granting of the variation will not alter the essential character of the locality.

"The appearance and character of the property will stay the same and will not change the character of the neighborhood."

The character of the locality should be unchanged by the proposal. The property will remain commercial in use.

6. Describe how the proposed variation will not impair an adequate supply of light and air to adjacent property, or substantially increase congestion in the public streets, or increase the danger of fire, or endanger the public safety, or substantially diminish or impair property values within the neighborhood.

"The appearance and character of the property will stay the same and will not impair adequate supply of light or increase congestions in the public streets."

No impact is expected as a result of the granting of the variation.

STAFF REVIEW

Fire Department Review: The Fire Department has submitted comments dated May 17, 2016. Based upon the proposed uses, both buildings will require a fire sprinkler system. The Plan Commission may wish to confirm with the petitioner that they understand this requirement.

Engineering Division Review: The Engineering Division has reviewed the submittal and has provided a comment memo dated May 18, 2016. The Engineering Division shares the Planning Division concern of a lack of details and accuracy with regard to the new parking configuration between the two buildings.

Health Division Review: The Health Division has reviewed the submittal and has the following comments at this time:

1. A menu of the food items that will be served in the facility is required. Based on the menu, the type of grease trap interceptor/basin necessary will be determined.
2. A hand wash sink is required to be installed in the kitchen area.
3. A sufficient amount of cabinets must be provided for the storage of dry goods and disposable service wares. This will meet the 25% dry storage room requirement for this type of facility.
4. The person in charge of the kitchen/bar must acquire a food service sanitation certificate from the Illinois Department of Public Health or be registered in the food service sanitation course prior to the opening of the food service area.

Building Division Review: The Plumbing Inspector has reviewed the submittal and has the following comments at this time: Two separate accessible bathrooms are required. The Plan Commission may wish to discuss with the petitioner if this requirement can be met.

Impact on Adjacent Uses: There is no significant impact anticipated on adjacent uses.

Staff Recommended Action: Staff recommends that the Plan Commission review the following list of items with the petitioner prior to taking action on Docket Nos. 2016-12ABC:

- Determine the hours of operation for The Vape Room and the patio seating;
- Request a scaled and dimensioned site plan to indicate the proposed parking layout.
- Discuss the lighting plans for the new parking area and patio between the buildings;
- Determine locations for the required bicycle parking;
- Discuss repairs to the exterior of the proposed medical research lab building;
- Discuss the location and style of a trash enclosure;
- Discuss the requirement for an additional accessible bathroom at The Vape Room; and
- Reiterate the Fire Department comments that fire sprinklers are required.

PROPOSED MOTIONS

If the Plan Commission finds that the petitioner has satisfied the requirements for the granting of the requested zoning variation for two principal buildings and special use approval for a tavern and a medical research laboratory, appropriate motions would be to:

Recommend approval of Docket No. 2016-12A, granting a Variation from Title 19, Zoning, of the Wheeling Municipal Code, Chapter 19.03 General Provisions, Section 19.03.070 Number of Buildings per Lot, Subsection A, Principal Buildings in All Districts, to allow more than one principal building on a zoning lot;

And recommend approval of Docket No. 2016-12B to grant Special Use-Site Plan Approval as required under Title 19, Zoning, of the Wheeling Municipal Code, Chapter 19-06 Commercial Districts, Chapter 19-10 Use Regulations, Chapter 19-12 Site Plan Approval Requirements, in order to establish a tavern in the existing commercial building at the front of the property, in accordance with the following exhibits submitted April 19, 2016 (except as noted) by The Vape Room for 516 N. Milwaukee Avenue, Wheeling, Illinois:

- Cover letter
- Additional operational details (received May 17, 2016),
- Front building floor plan,
- Patio plan
- Overall site plan, and
- Patio enclosure image.

And with the following conditions:

1. (To be determined at the hearing.)

And recommend approval of Docket No. 2016-12C to grant Special Use-Site Plan Approval as required under Title 19, Zoning, of the Wheeling Municipal Code, Chapter 19-06 Commercial Districts, Chapter 19-10 Use Regulations, Chapter 19-12 Site Plan Approval Requirements, in order to establish a medical research laboratory at the rear building of the property, in accordance with the following exhibits submitted April 19, 2016 for 516 N. Milwaukee Avenue, Wheeling, Illinois:

- Cover letter
- Overall site plan,
- Rear building elevations, and
- Rear building floor plan.

And with the following conditions:

1. That the existing stucco shall be repaired and painted.

Andrew C. Jennings, AICP
Director of Community Development

Brooke A. Jones
Senior Planner

Attachments:

Fire Department comments, dated 5.17.2016

Engineering Division comments, dated 5.18.2016

Photos of existing conditions (staff)

Cover letter

Additional operational details (Vape Room)

Front building floor plan

Patio plan

Overall site plan

Rear building elevations

Rear building floor plan

Patio enclosure image

MEMO – Fire Prevention Bureau

TO: Brooke Jones, Village Planner

FROM: Ronald S. Antor, Fire Inspector

CC: Andrew Jennings, Director of Community Development

Keith MacIsaac, Fire Chief

FPB File

DATE: May 17, 2016

SUBJECT: Proposed Special Use for Two Existing Buildings on the Same Parcel – 516 North Milwaukee Avenue – The Vape Room - Plans received for review by the Fire Department, May 9, 2016.

The Wheeling Fire Department has reviewed the submittals received related to the above referenced project and has the following comments:

Site Plan

1. The site plan reviewed is for an existing site with two one story commercial structures.
2. Based on the documents reviewed, there are no significant changes to the site, nor are there any changes to existing utilities.
3. The only change noted for the site is the addition of the outdoor patio at the rear of the front building on the site.

The Vape Room (Front Building) – 516 North Milwaukee Avenue – Special Use for revisions to the existing business model to include the sale of alcoholic beverages and adding an outdoor patio area.

1. The proposed use would expand upon the previous change in use to a B (Business) Use Group occupancy use as defined in the 2012 Edition of the International Building (IBC) and Fire Prevention Codes (IFC). This also includes increasing occupant loads based on Table 1004.1.2 of the Village's Building Code.
2. The proposed accumulation of changes will necessitate that the occupancy be provided with an automatic fire sprinkler system and fire alarm meeting the Village's Building and Fire Prevention Codes.
3. All construction related to the building improvements, including patio area will need to comply with the Village's Building and Fire Prevention Codes (2012 Editions of the International Building Code & International Fire Code – with amendments).

Clinical laboratory (Rear Building) – 516 North Milwaukee Avenue – Special Use for a Clinical Laboratory in an existing structure.

1. The existing rear building is a S (Storage) Use Group occupancy as defined in the 2012 Edition of the International Building (IBC) and Fire Prevention Codes (IFC). The new building would be classified as a Mixed Use Occupancy consisting of B (Business) Use Group and S (Storage) Use Group Occupancies as defined in the 2012 Edition of the International Building (IBC) and Fire Prevention Codes (IFC).
2. All construction for the proposed occupancy would need to comply with the Village's Building and Fire Prevention Codes (2012 Editions of the International Building Code & International Fire Code – with amendments).
3. As noted in Comment #2, the proposed tenant buildout will need to comply with the Village's Building and Fire Prevention Codes. Some of the items that this would include and would need to be addressed during the permitting process are:
    a. The change in use group and occupancy will require the building to be provided with an automatic fire sprinkler system.
    b. The building's fire sprinkler system will require a monitored fire alarm system.
4. No information was provided on what functions are being performed in the "Clinical Laboratory". Additional code related requirements may be required based on actual activities being conducted at this facility.
5. A new address should be assigned to this property.

At this time there are no other Fire Department comments related to the project as presented in the documents reviewed.

MEMORANDUM

TO: Brooke Jones, Senior Planner

FROM: Kyle Goetzelmann, Civil Engineer I

COPY: Jon Tack, Village Engineer

DATE: **May 18th, 2016**

SUBJECT: **Vape Room Special Use and Zoning Variation**
516 N. Milwaukee Ave - Review Comments

The Engineering Division received a cover letter, floor plan, building elevations, and a site plan for the subject project on May 9th 2016. The Engineering Division has completed a review of the above referenced submittal and offers the following comments at this time:

1. Asphalt resurfacing must be constructed in accordance with the Village of Wheeling standard detail for parking lots which can be found on the Village website.
2. Detailed site plan will be necessary. This should include parking aisle widths, parking stall width/lengths, and topographic information to better illustrate drainage on the site.
3. The rear parking area and entrance to the building/patio must be ADA compliant.
4. Rear patio must be protected from the parking lot traffic in one of the following ways:
    a. Concrete patio must be elevated between 6-7” above parking lot grade. An ADA ramp will be required.
    b. If patio is at the same grade as the parking lot, bollards must be installed at 4’ intervals surrounding the perimeter of the patio.

Vape Room – 516 N. Milwaukee Avenue

Docket No. 2016-12ABC (Special Use-Site Plan Approval of a Tavern and a Medical Research Laboratory and a Zoning Variation to Allow Two Principal Buildings on a Single Zoning Lot)

Plan Commission Meeting – May 26, 2016

Existing conditions of front building and parking lot – looking west

Vape Room – 516 N. Milwaukee Avenue

Docket No. 2016-12ABC (Special Use-Site Plan Approval of a Tavern and a Medical Research Laboratory and a Zoning Variation to Allow Two Principal Buildings on a Single Zoning Lot)

Plan Commission Meeting – May 26, 2016

Existing conditions of rear building– looking northwest

Vape Room – 516 N. Milwaukee Avenue

Docket No. 2016-12ABC (Special Use-Site Plan Approval of a Tavern and a Medical Research Laboratory and a Zoning Variation to Allow Two Principal Buildings on a Single Zoning Lot)

Plan Commission Meeting – May 26, 2016

Existing conditions of parking and patio space between buildings – looking at rear door of Vape Room

COVER LETTER

Special use request

Project: 516 N. Milwaukee Avenue, Wheeling, IL 60090

Front Building:

This project is designed, to extend services to currently existing business, Vape Room located in the front building. This project is to add a bar, within its existing lounge for its patrons. Vape Room, is a retail store and lounge. While customers spend their time in the lounge, the Vape Room would like to offer their customers an alcoholic beverage along with snacks. The bar is designed, to solely service Vape Room customers. In the rear, of the front building, there will be an outside patio, to accommodate eight (8) tables, with seating four (4) people. The outside patio, will be separated by fence, with additional landscaping. The approximate size of the patio will be 45ft x 10ft. Total seating capacity is not to exceed 44 people. The proposed use is permitted, at multiple establishments located, in the immediate proximity to the project property. Vape Room, would make all necessary changes to comply with the Village of Wheeling requirements.

Rear Building:

The rear building, is currently unoccupied, and is being used as storage. The proposed project, will improve the building condition. It will also convert its front space of 2100 sf., to be used as a clinical laboratory. This will in turn, improve the property, from being vacant to being fully operational. The impending improvements to the property will include, the resurfacing of parking between front and rear buildings. This project would not effect, the amount of currently available parking spaces. The Clinical laboratory, is solely in the business of analyzing samples, and will not provide any services directly to the public. There is no heavy equipment or machinery that would interfere with any neighbors. The business operates with three (3) employees. Business hours are Monday through Friday: 8am-4pm and Saturday: 8am-12pm. Sunday: Closed.

Should you have any questions or comments, please feel free to contact Steve Liker at (847) 668-3700 or Gary Levitas at (847) 668-3000.

Thank you,

4/19/16

Steve Liker

Exhibit received April 19, 2016

Brooke Jones

From: Steve Liker <steveliker@yahoo.com>
Sent: Tuesday, May 17, 2016 1:38 PM
To: Brooke Jones
Cc: glevitas@comcast.net
Subject: Re: seating at 516 N Milwaukee

Brooke,

The total capacity of 44 was based on 12 people for the lounge and 32 people for the outside patio.
Three employees at the peak shift.
Please let me know if you have any additional questions.

Thank you,

Steve Liker
President and CEO
Vape Room, LLC.
Direct: (847) 668-3700

Exhibit received May 17, 2016

Front Building

HANNA ARCHITECTS, INC.
(312) 750-1800
180 W. WASHINGTON
CHICAGO, ILLINOIS 60602
FAX (312) 750-1801
PROFESSIONAL DESIGN FIRM
ARCHITECT CORPORATION
LICENSE NUMBER
181 - 001185

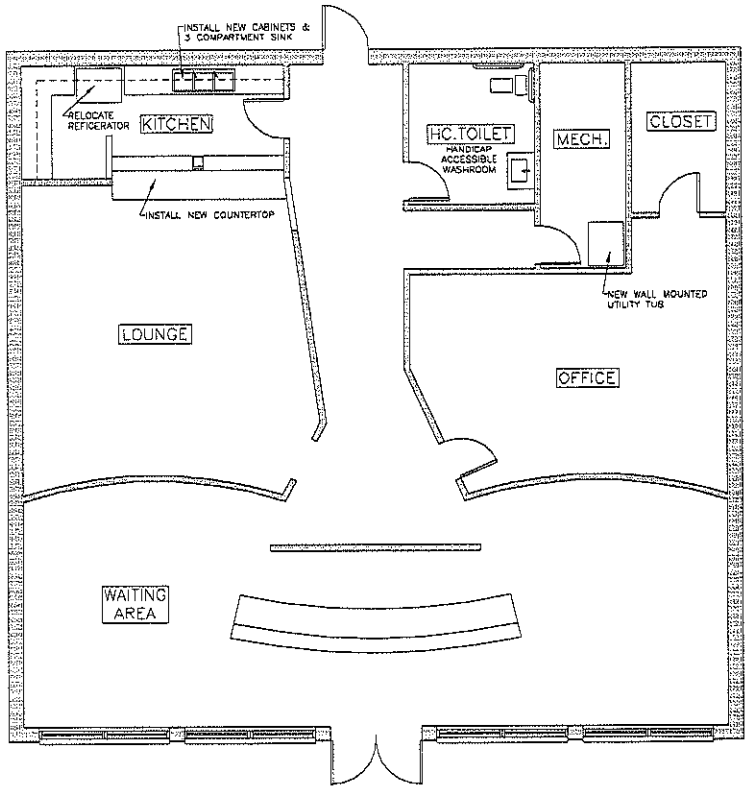

VAPE FLOOR PLAN

SCALE: 1/8" = 1'-0"

© HANNA ARCHITECTS, INC. 2016

Exhibit received April 19, 2016

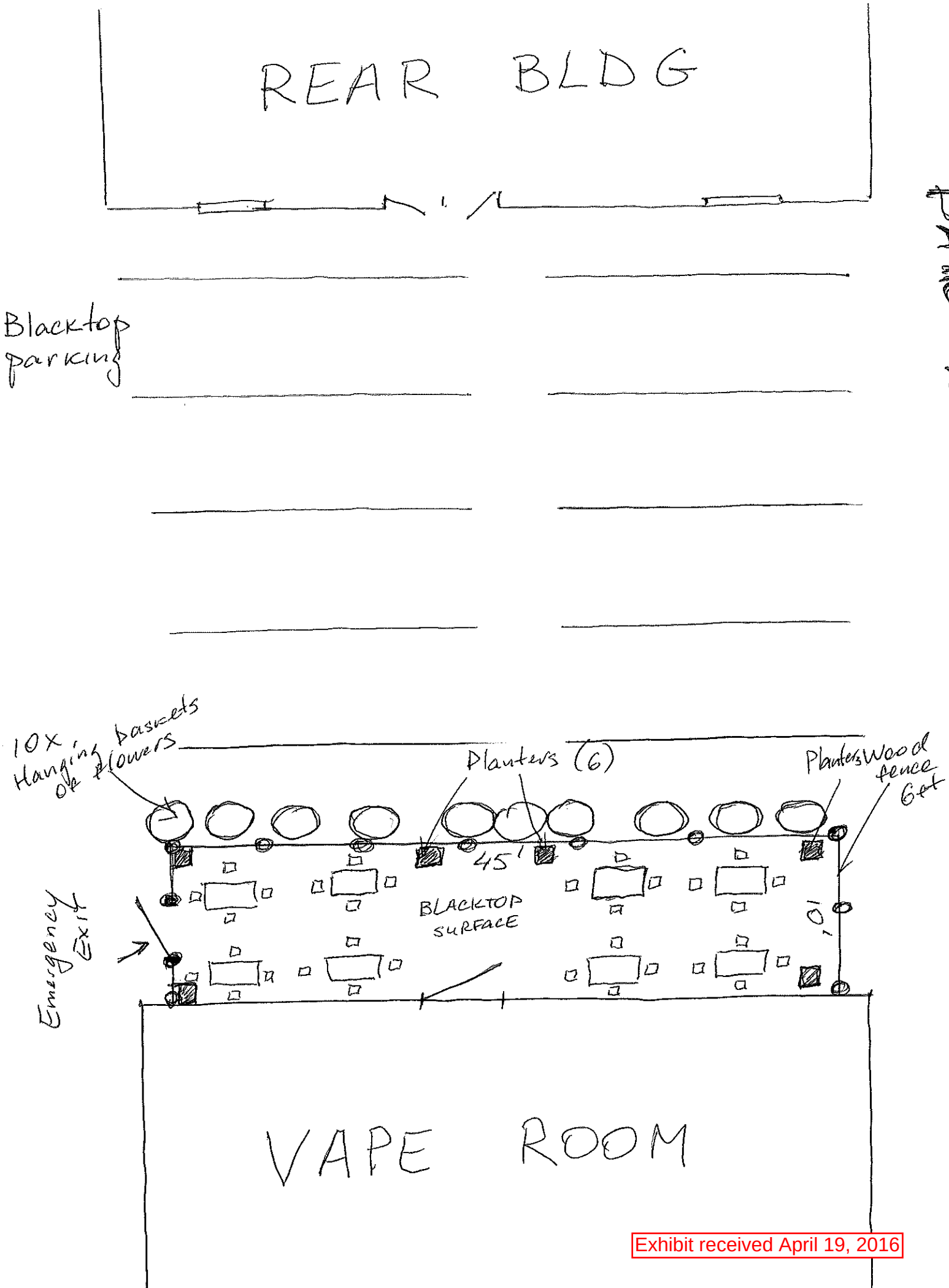

Exhibit received April 19, 2016

Rear Building

INTERIOR BUILD-OUT

WAREHOUSE FOR BLOOD SUPPLY LAB

516 NORTH MILWAUKEE AVE.

WHEELING , IL 60090

SITE PLAN

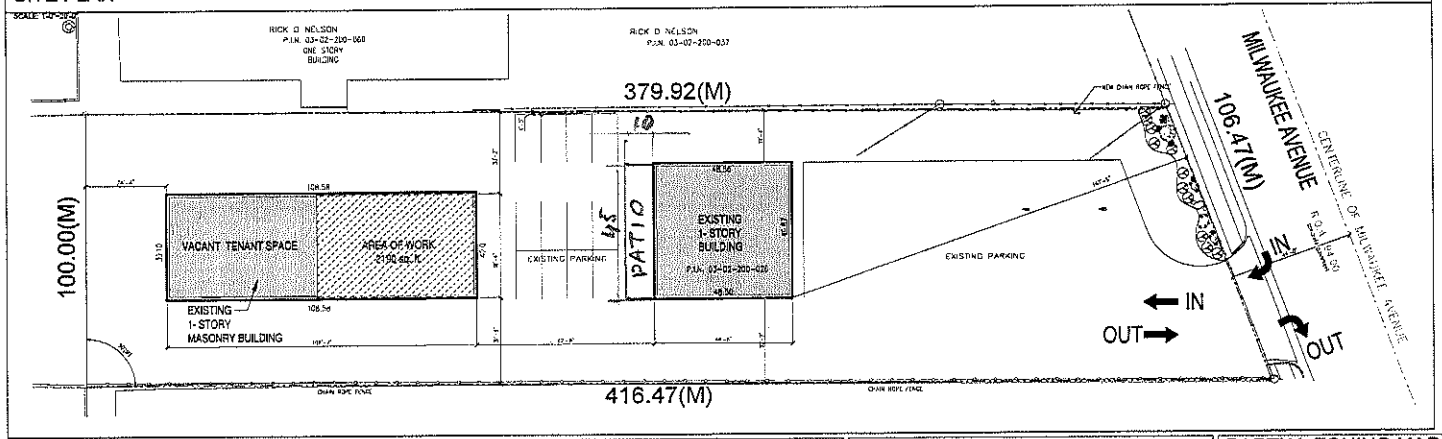

EXISTING SOUTH ELEVATION

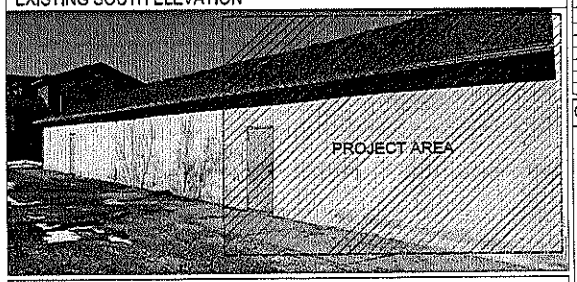

EXISTING WEST ELEVATION

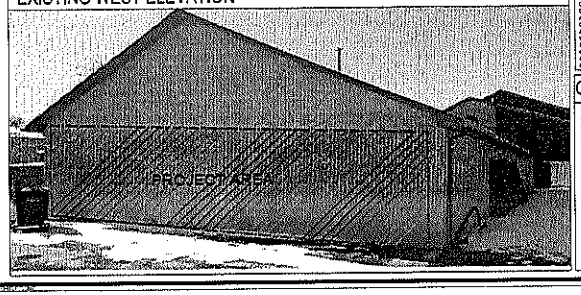

SHEET INDEX:

C-1	COVER SHEET & DRAWING INDEX, SITE PLAN
A-1	PROPOSED FLOOR PLAN
A-2	
A-3	
A-4	

GENERAL CONSTRUCTION NOTES

FURNISH ALL LABOR, MATERIALS, TOOLS, INSURANCE AND PERMITS NECESSARY TO COMPLETE THE WORK AS SHOWN AND AS REASONABLY IMPLIED BY THE DRAWINGS, SPECIFICATIONS, NOTES AND REQUIRED BY ANY CODE WITH JURISDICTION TO COMPLETE THEIR SCOPE OF WORK FOR A COMPLETE AND PROPERLY FINISHED JOB. THE DRAWINGS AND SPECIFICATIONS ARE INTENDED TO ILLUSTRATE AND DESCRIBE A COMPLETE JOB IN EVERY RESPECT. CONTRACTOR SHALL PROCEED WITH THE UNDERSTANDING AND AGREEMENT THAT A SATISFACTORY JOB IS DETAILED WITH THE INFORMATION AS PROVIDED. THE GENERAL CONTRACTOR SHALL BE SOLELY RESPONSIBLE FOR DIMENSIONAL ACCURACY. ALL DIMENSIONS SHALL BE VERIFIED AND SUBMITTED IN WRITING TO THE ARCHITECT PRIOR TO THE COMMENCEMENT OF FABRICATION OF WORK OR THE GENERAL CONTRACTOR SHALL BE SOLELY RESPONSIBLE FOR SAME. ANY DEVIATION FROM THESE PLANS AND SPECIFICATIONS WITHOUT PRIOR WRITTEN CONSENT OF ARCHITECT SHALL BE THE RESPONSIBILITY OF CONTRACTOR AND SHALL NULLIFY AND VOID ANY ARCHITECTURAL CERTIFICATION.

FURNISH ALL LABOR, MATERIALS, TOOLS, INSURANCE AND PERMITS NECESSARY TO COMPLETE THE WORK AS SHOWN AND AS REASONABLY IMPLIED BY THE DRAWINGS, SPECIFICATIONS, NOTES AND REQUIRED BY ANY CODE WITH JURISDICTION TO COMPLETE THEIR SCOPE OF WORK FOR A COMPLETE AND PROPERLY FINISHED JOB. THE DRAWINGS AND SPECIFICATIONS ARE INTENDED TO ILLUSTRATE AND DESCRIBE A COMPLETE JOB IN EVERY RESPECT. CONTRACTOR SHALL PROCEED WITH THE UNDERSTANDING AND AGREEMENT THAT A SATISFACTORY JOB IS DETAILED WITH THE INFORMATION AS PROVIDED. THE GENERAL CONTRACTOR SHALL BE SOLELY RESPONSIBLE FOR DIMENSIONAL ACCURACY. ALL DIMENSIONS SHALL BE VERIFIED AND SUBMITTED IN WRITING TO THE ARCHITECT PRIOR TO THE COMMENCEMENT OF FABRICATION OF WORK OR THE GENERAL CONTRACTOR SHALL BE SOLELY RESPONSIBLE FOR SAME. ANY DEVIATION FROM THESE PLANS AND SPECIFICATIONS WITHOUT PRIOR WRITTEN CONSENT OF ARCHITECT SHALL BE THE RESPONSIBILITY OF CONTRACTOR AND SHALL NULLIFY AND VOID ANY ARCHITECTURAL CERTIFICATION.

OCCUPANCY LOAD :

2006 IBC BUSINESS GROUP B. BUSINESS GROUP B OCCUPANCY INCLUDES, AMONG OTHERS, THE USE OF A BUILDING OR STRUCTURE, OR A PORTION THEREOF, FOR OFFICE, PROFESSIONAL OR SERVICE-TYPE TRANSACTIONS, INCLUDING STORAGE OF RECORDS AND ACCOUNTS. SECTION 903.2.9 GROUP S-1, USE AND OCCUPANCY CLASSIFICATION

311.3 MODERATE-HAZARD

STORAGE GROUP S-1, EXT M-1 LIMITED MANUFACTURING DISTRICT

B. PERMITTED USES: 5. PRODUCTION, PROCESSING, CLEANING, TESTING OR REPAIR, LIMITED TO THE FOLLOWING USES AND PRODUCTS.

OCCUPANCY LOAD:

INTERIOR ALTERATION AREA: 2615 S.F.

STORAGE, STOCK, SHIPPING AREAS 200 GROSS FLOOR AREA=1267 S.F. MAX OCCUPANTS=6 OCCUPANTS (MAX. FLOOR AREA ALLOWANCES)

BUSINESS AREAS=100 GROSS TOTAL AREA=1325 S.F.

MAX OCCUPANTS=15 OCCUPANTS (MAX. FLOOR AREA ALLOWANCES)

TOTAL 23 OCCUPANTS MAX. FLOOR AREA ALLOWANCES

ACTUAL NUMBER OF OCCUPANTS TOTAL=5 EMPLOYEES

-EXISTING BUILDING HEIGHT TO REMAIN

-EXISTING CONSTRUCTION TYPE IS ASSUMED 5B

SCOPE OF WORK:

- BUILT-OUT 2 PRIVATE OFFICES
- STORAGE
- 2 RESTROOMS
- WAREHOUSE AREA: BUFFLY
- ADD NEW WATER METER
- ADD NEW ELECTRIC METER
- ADD GAS METER

GENERAL PROJECT REQUIREMENTS:

ALL WORK PERFORMED AND MATERIALS USED SHALL COMPLY WITH THE FOLLOWING REGULATIONS AND APPLICABLE CODES :

15.01.020 ADOPTION OF THE INTERNATIONAL BUILDING CODE, 2012 EDITION.
15.01.030 ADOPTION OF THE NATIONAL ELECTRICAL CODE, 2011 EDITION.
15.01.040 ADOPTION OF THE INTERNATIONAL MECHANICAL CODE, 2012 EDITION.
15.01.050 ADOPTION OF THE INTERNATIONAL PLUMBING CODE, 2012 EDITION, AND ILLINOIS STATE PLUMBING CODE, LATEST EDITION.
15.01.060 ADOPTION OF THE INTERNATIONAL FUEL GAS CODE, 2012 EDITION.
15.01.070 ADOPTION OF THE INTERNATIONAL ENERGY CONSERVATION CODE, 2012 EDITION.
15.01.080 ADOPTION OF THE INTERNATIONAL RESIDENTIAL CODE, 2012 EDITION.
15.01.090 ADOPTION OF THE INTERNATIONAL PROPERTY MAINTENANCE CODE, 2012 EDITION.

COMMUNITY DEVELOPMENT:
2 COMMUNITY BOULEVARD
WHEELING, IL 60090 (847) 459-2620
FAX: (847) 459-2646

STATEMENT OF COMPLIANCE

I HAVE PREPARED, OR CAUSED TO BE PREPARED UNDER MY DIRECT SUPERVISION, THE ATTACHED PLANS AND SPECIFICATIONS AND STATE THAT, TO THE BEST OF MY KNOWLEDGE ADHERED TO VILLAGE OF WHEELING CODES:

SIGNED: _____ ARCHITECT

IL. REG. NO.: _____

ANY DRAWING DISCREPANCIES SHALL BE BROUGHT TO THE IMMEDIATE ATTENTION OF THE ARCHITECT BEFORE PROCEEDING WITH THE WORK.

PARTIAL ZONING MAP

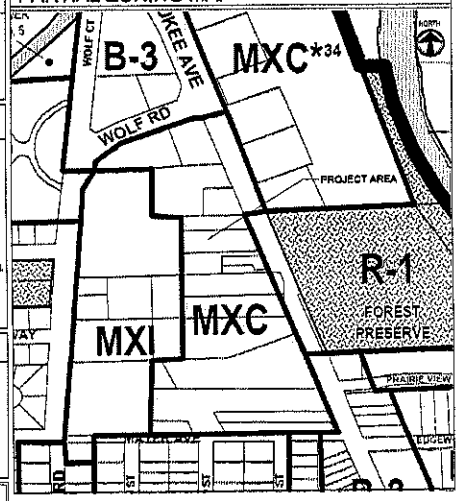

MILESTONE DATES
Issued for Permit: Feb. 17, 2016

PROJECT:
WEBNER BUILT OUT WAREHOUSE FOR BLOOD SUPPLY LAB
516 NORTH (REAR BUILDING)
MILWAUKEE AVE.
WHEELING, IL 60090

PUROHIT ARCHITECTS
Tel: 847.942.8777 Fax: 847.359.8844
Email: hemal@purohitarchitects.com
www.purohitarchitects.com
11152 Old Timber Ct.
Hoffman Estates, IL 60192

Issued for Permit: FEB. 17, 2016

Drawn By: DB, PAH

Chk'd:

COVER SHEET, DRAWING INDEX

C1

01 OF 08

PROJECT NUMBER
15112.00

Exhibit received April 19, 2016

Rear Building

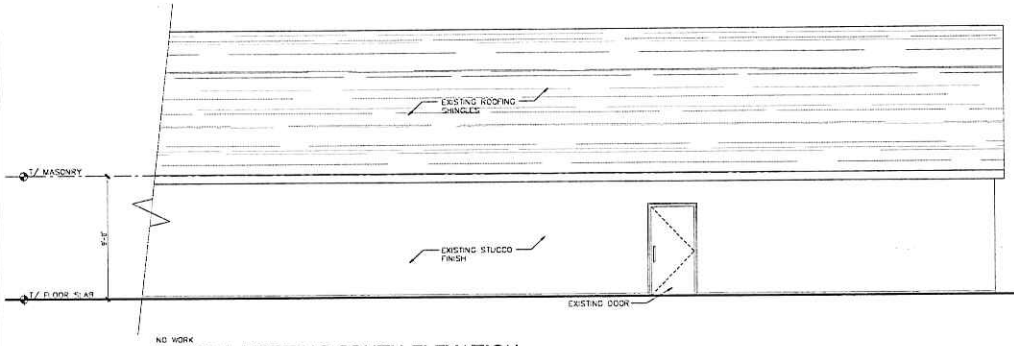

NO WORK
PARTIAL EXISTING SOUTH ELEVATION
SCALE: 1/4"=1'-0"

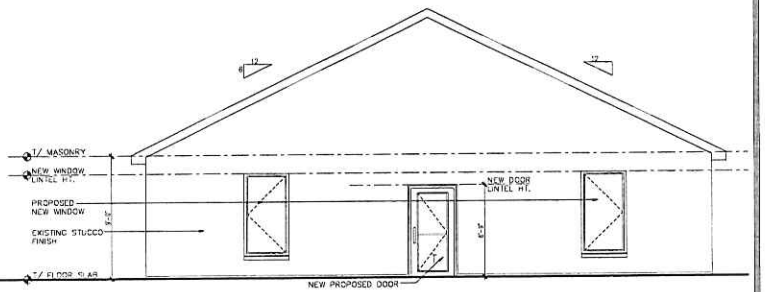

PROPOSED SOUTH ELEVATION
SCALE: 1/4"=1'-0"

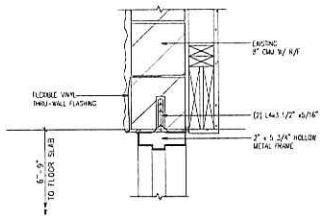

NEW
SECTION WINDOW SILL & JAMB
SCALE: 1 1/2"=1'-0"

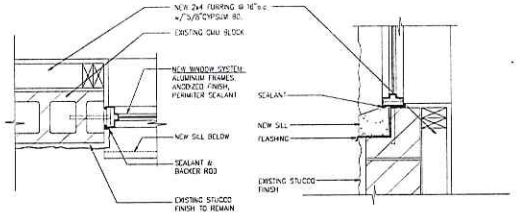

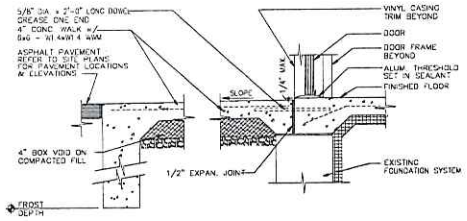

NEW
SECTION ENTRY THRESHOLD DOOR
SCALE: 1 1/2"=1'-0"

MILESTONE DATES
Issued for Permit: March 05, 2018

PROJECT: INTERIOR BUILD OUT WAREHOUSE FOR BLOOD SUPPLY LAB
516 NORTH MILWAUKEE AVE.
(REAR BUILDING)
WHEELING, IL 60090

PUROHIT ARCHITECTS
Tel: 847 942 8777 Fax: 847 359 6844
Email: hemal@purohitarchitects.com
www.purohitarchitects.com
1192 Old Timber Ct.
Hoffman Estates, IL 60192

Issued for Permit: FEB. 17, 2016
Drawn By: DB, PAS
Sheet: EXTERIOR ELEVATIONS & DETAILS
A2
03 IV 06

PROJECT NUMBER
15112.00

Exhibit received April 19, 2016

Rear Building

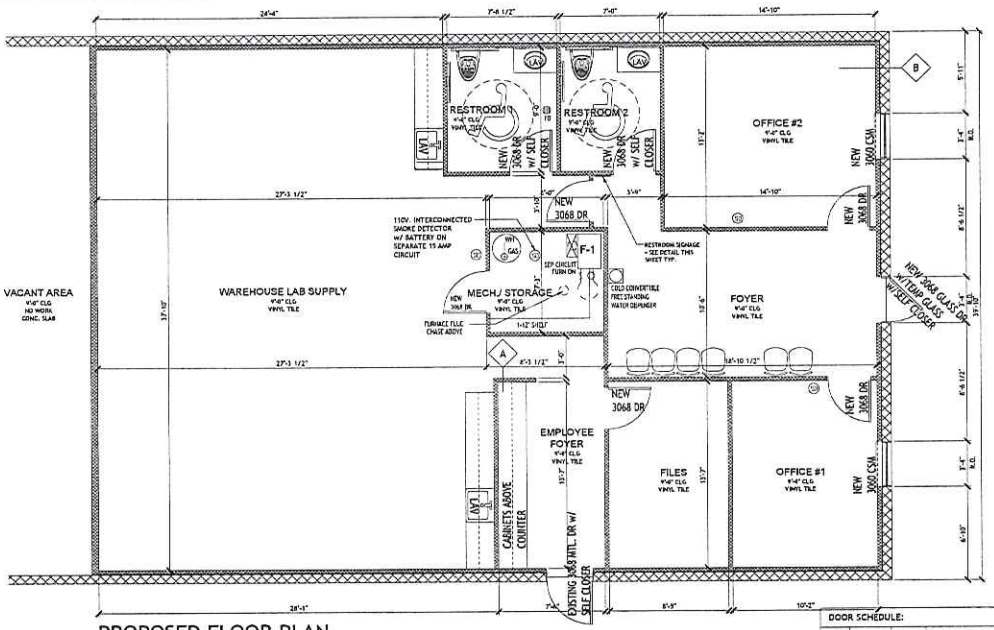

PROPOSED FLOOR PLAN

SCALE: 1/4"=1'-0"

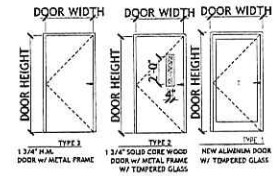

DOOR ELEVATIONS

SCALE: 1/4"=1'-0"

DOOR SCHEDULE:

DOOR NUMBER/ TAG	DOOR LOCATION	NEW/ EXISTING	DOOR WDT.	DOOR HT.	DOOR THICK	DOOR TYPE	DOOR MAT'L	DOOR FIN.	LABEL DOOR & FRAME	FIRE RATED	FRAME MAT'L	FRAME FIN.	HARDWARE SET	REMARKS
1	FOYER	EXISTING	3'-0"	7'-0"	1 3/4"	1	ALUMINUM	ANODIZED	-		ALUM.	ANODIZED	EGRESS LOCKSET	SELF CLOSER & LEVER HANDLE
2	OFFICE #1	EXISTING	3'-0"	7'-0"	1 3/4"	3	H.M.	PAINTED	-	45 MIN RATED	H.M.	PAINTED	EGRESS LOCKSET	SELF CLOSER & LEVER HANDLE LATCH SET
3	OFFICE #2	NEW	3'-0"	7'-0"	1 3/8"	3	H.M.	PAINT	A	45 MIN RATED	H. M./WD.	PAINT	SET # B1	SELF CLOSER & LEVER HANDLE -w/PANIC HARDWARE
4	FILES	NEW	3'-0"	7'-0"	1 3/8"	3	SOLID WD.	PAINT	A	-	H. M./WD.	PAINT	DUMMY LATCH	PROVIDE SELF CLOSER
5	RESTROOMS #1	NEW	3'-0"	7'-0"	1 3/8"	3	SOLID WD.	PAINT	A	-	H. M./WD.	PAINT	DUMMY LATCH	PROVIDE SELF CLOSER
6	RESTROOMS #2	NEW	3'-0"	7'-0"	1 3/4"	3	SOLID WD.	PAINT	A	-	H.M.	PAINTED	SET # B2	SELF CLOSER & LEVER HANDLE
7	WAREHOUSE LAB SUPPLY	NEW	(2)3'-0"x7'-0"	7'-0"	1 3/8"	4	SOLID WD.	PAINT	A	-	H. M./WD.	PAINT	-	HANDLE
8	EMPLOYEE FOYER	NEW	(2)3'-0"x7'-0"	7'-0"	1 3/4"	1	H.M.	PAINTED		45 MIN RATED	H. M./WD.	PAINT	-	PROVIDE SELF CLOSER
		EXISTING	3'-0"	7'-0"	1 3/4"	3	H.M.	PAINTED	-	45 MIN RATED	H.M.	PAINTED	EGRESS LOCKSET	SELF CLOSER & LEVER HANDLE LATCH SET

TABLE 715.5.3 LIMITING SIZES OF WIRED GLASS PANELS
OPENING FIRE PROTECTION RATING=1 AND 1 1/2 HOURS/ MAXIMUM AREA (square inches)=100/ MAXIMUM HEIGHT (inches)=33" /MAXIMUM WIDTH (inches)=10"
* FIRERITE WIRED GLAZING TO BE "FIRELITE NT" OR APPROVED EQ.

HARDWARE SET SCHEDULE

SET # B1 INTERIOR PRIVACY DOOR (RESTROOM)
- 1 1/2 PAIR BB BUTT HINGES PER EACH DOOR LEAF, HAGER: BB-127N (OR EQUAL)
- 1 PRIVACY LOCKSET
- "SCHLAGE"®200 SERIES AMPTER W/ ADA COMPLIANT LEVER HANDLE, "BRUSHED CHROME" (OR EQUAL)
- 1 DOOR STOP (HAGER: FLOOR-249P, 240). OR EQUAL

SET # B2 INTERIOR EGRESS DOOR
- 1 1/2 PAIR BB BUTT HINGES, HAGER: BB-127N (OR EQUAL)
- 1 PASSAGE LATCHSET, 1 CLOSER WITH BACK CHECK (MAX. 5 LB. PULL)
- "SCHLAGE"®200 SERIES AMPTER W/ ADA COMPLIANT LEVER HANDLE, "BRUSHED CHROME" (OR EQUAL)
- 1 FLOOR STOP

HANDICAP ACCESSIBLE HARDWARE:

ALL HARDWARE FOR DOOR SHALL BE HANDICAP ACCESSIBLE PER ELEMENT ACCESSIBILITY GUIDELINES (EAGL) APP. 703 (EAGL APP. 703.1.1.1)

DOOR TYPE: | FRAME TYPE:

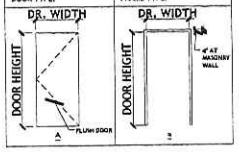

INSULATION & FENESTRATION REQUIREMENTS BY COMPONENT:

FENESTRATION U-FACTOR	0.35 MAX.
SKYLIGHT U-FACTOR	0.60 MAX.
GLAZED FENESTRATION SHGC	NR
CEILING R-VALUE	49 MIN.
WOOD FRAME WALL R-VALUE (EXTERIOR)	19 OR 13+5 MIN.
MASS WALL R-VALUE (EXTERIOR)	13 MIN.

AIR LEAKAGE: BUILDING THERMAL ENVELOPE:

THE SEALING METHODS BETWEEN DISSIMILAR MATERIALS SHALL ALLOW FOR DIFFERENTIAL EXPANSION AND CONTRACTION. THE FOLLOWING SHALL BE CAULKED, GASKETED, WEATHER STRIPPED OR OTHERWISE SEALED WITH AIR BARRIER MATERIAL, SUITABLE FILM OR SOLID MATERIAL:

1. ALL JOINTS, SEAMS & PENETRATIONS.
2. SUITE-BUILT WINDOWS, DOORS & SKYLIGHTS.
3. OPENINGS BETWEEN WINDOWS AND DOOR ASSEMBLIES AND THEIR RESPECTIVE JAMBS & FRAMING.
4. UTILITY PENETRATIONS.
5. DROPPED CEILINGS OR CHASES ADJACENT TO THE THERMAL ENVELOPE.
6. WALLS & CEILINGS SEPARATING A GARAGE FROM CONDITIONED SPACES.
7. BEHIND TUBS & SHOWERS OR EXTERIOR WALLS
8. COMMON WALLS BETWEEN SWELLING UNITS.

GENERAL DOOR NOTES:

01. CONTRACTOR MUST VERIFY ALL ROUGH OPENING AND MASONRY DIMENSIONS, WITH DOOR MANUFACTURER PRIOR TO ORDERING, FABRICATION, OR INSTALLATION.
02. ALL MEANS OF EGRESS DOORS SHALL BE READILY OPENABLE FROM THE SIDE FROM WHICH EGRESS IS TO BE MADE WITHOUT THE USE OF A KEY OR SPECIAL KNOWLEDGE OR EFFORT.
03. ALL DOORS AND HARDWARE SHALL COMPLY WITH APPLICABLE ACCESSIBILITY CODE REQUIREMENTS.04. THE GENERAL CONTRACTOR SHALL CARRY WORKMAN'S COMPENSATION, PUBLIC LIABILITY, AND PROPERTY DAMAGE INSURANCE AND PAY FOR SAME.
04. CLOSERS INDICATED WITH "HD" SHALL BE HEAVY DUTY RATED. ALL CLOSERS SHALL BE GRADE 1 ADA COMPLIANT.
INTERIOR DOORS: CLOSER SHALL BE MOUNTED TOWARD "UNFINISHED" SPACE. PARALLEL ARM SHALL BE USED WHEN MOUNTED TOWARD FINISHED SPACE.
EXTERIOR DOORS: CLOSER SHALL BE MOUNTED TOWARDS INTERIOR SPACE.
08. DOORS WITH CLOSERS SHALL REQUIRE NO MORE THAN FIVE (5) LBS. TO PUSH/PULL OPEN AT INTERIOR HINGED LOCATIONS & SHALL REQUIRE NO MORE THAN EIGHT-AND-A-HALF (8.5) LBS. MAX. AT EXTERIOR HINGED LOCATIONS.
06. OPENING FORCE FOR ALL DOORS SHALL NOT EXCEED FIVE (5) LBS. FORCE.
07. COORDINATE VOLTAGE REQUIREMENTS FOR ELECTRIC LOCK(S) & CARD READER(S), IF ANY, w/ SECURITY VENDOR AND HARDWARE SELECTED.
08. 2'-10" WIDE INTERIOR SUITES' DOORS SHALL HAVE HARDWARE PRODUCING A CLEAR WIDTH OF 32" WITH THE DOOR PULLY OPENED AT 90 DEGREES.
09. CHANGES IN FLOOR LEVEL AT DOORS SHALL HAVE A THRESHOLD (WHERE APPLICABLE) IN COMPLIANCE WITH ALL ADA REQUIREMENTS.
10. UPON ACTIVATION OF THE FIRE ALARM SYSTEM OR LOSS OF POWER TO THE BUILDING, ALL ELECTRIC STRIKES AND MAGNETIC "HOLD OPEN" LOCKS SHALL RELEASE AND THOSE DOORS SHALL BE READILY OPENABLE.
11. ALL DOOR OPENING DEVICE SHALL BE "LEVER" TYPE.
12. ALL SAFETY / TEMPERED GLASS AND FIRE LABELED DOORS & FRAMES SHALL BEAR A PERMANENT MARKING/LABEL, INDICATING THE MANUFACTURER & THE TYPE OF GLASS OR SHALL BEAR THE U.L. RESISTANCE LABEL. TYPICAL.
13. ALL EXTERIOR HOLLOW METAL DOORS & FRAMES SHALL BE GALVANIZED AND INSULATED. ALL H.M. FRAMES TO BE FULLY WELDED.
14. ALL HARDWARE TO BE BRUSHED CHROME FINISH, U.N.O.
15. PROVIDE A TACTILE WARNING (KNURLING) ON ALL DOOR HANDLES FOR DOORS THAT LEAD TO POTENTIALLY DANGEROUS AREAS, SUCH AS ELECTRICAL, MECHANICAL OR TRASH ROOMS.

MILESTONE DATES:
Issued for Permit: Feb. 17, 2016

PROJECT: RETROFIT/FIT OUT WAREHOUSE FOR BLOOD SUPPLY LAB
516 NORTH (REAR BUILDING)
MILWAUKEE AVE.
WHEELING, IL, 60090

PUROHIT ARCHITECTS
Tel: 847.942.9577 Fax: 847.359.6844
Email: hemal@purohitarchitects.com
www.purohitarchitects.com
11152 Old Timber Ct
Huffman Estates, IL 60192

Issued for Permit: FEB. 17, 2016
Drawn By: DB, PAI
Sheet: PROPOSED FLOOR PLAN
A1
01 02 03
PROJECT NUMBER 15112.00

Exhibit received April 19, 2016

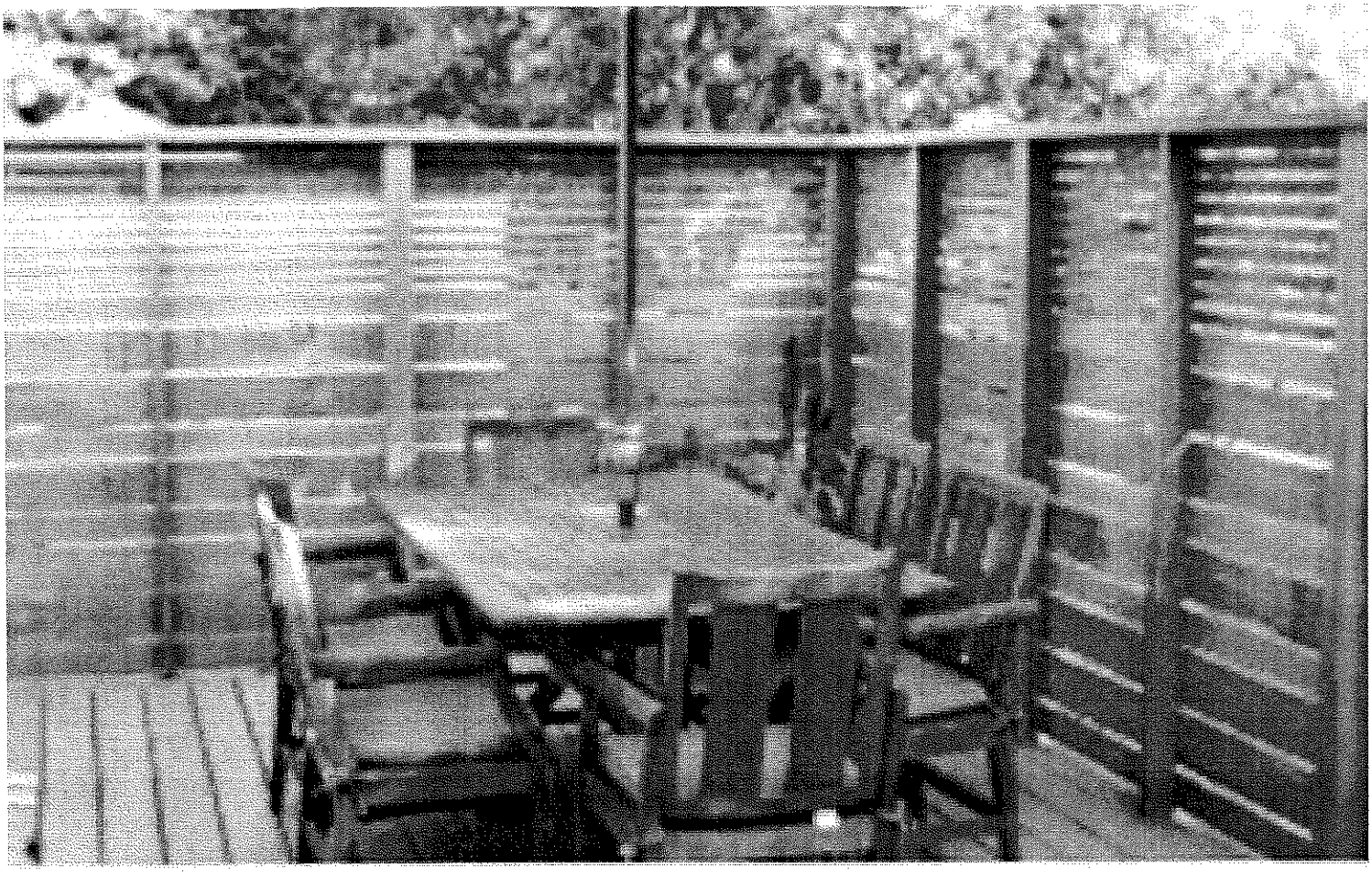

Exhibit received April 19, 2016

1. CALL TO ORDER

Chairman Ruffatto called the meeting to order at 6:30 p.m. on Thursday, May 12, 2016.

2. PLEDGE OF ALLEGIANCE

3. ROLL CALL

Present were Commissioners Issakoo, Johnson, Powers, Ruffatto, Sianis and Zangara. Commissioner Dorband was absent with prior notice. Also present were Brooke Jones, Senior Planner and Mallory Milluzzi, Village Attorney.

4. CHANGES TO THE AGENDA – None

5. CITIZEN CONCERNS AND COMMENTS - None

6. CONSENT ITEMS

A) SCBA 16-07
Finish Master
747 Glenn Avenue
Appearance Approval a Wall Sign

B) SCBA 16-08
Weber Flavors
549 Palwaukee Avenue
Appearance Approval Freestanding Signs

C) SCBA 16-09
Weber Flavors
44 Century Drive
Appearance Approval a Freestanding Sign

D) SCBA 16-10
Windy City Linen
1150 Willis Avenue
Appearance Approval a Wall Sign

Commissioner Powers moved, seconded by Commissioner Johnson to approve the following consent items.

Approve Docket No. SCBA 06-07 to permit installation of the wall sign in accordance with the sign drawing submitted April 27, 2016 by Creative Signs 3, Inc., on behalf of Finish Master, located at 747 Glenn Avenue, Wheeling, Illinois;

Approve Docket No. SCBA 16-8 to grant appearance approval for the proposed freestanding signs in accordance with the following exhibits submitted May 2, 2016 by Sign Palace for Weber Flavors, located at 549 Palwaukee Drive, Wheeling, Illinois:

- Monument style sign plan,
- Landscape plan,
- Site plan, and
- Directional sign plans (3 sheets).

And with the following condition of approval:

1. That the sign shall be setback at least ten feet from the property line.

Approve Docket No. SCBA 16-9 to grant appearance approval for the proposed freestanding sign in accordance with the following exhibits submitted May 2, 2016 by Sign Palace for Weber Flavors, located at 44 Century Drive, Wheeling, Illinois:

- Sign plan,
- Landscape plan, and
- Site plan.

And with the following condition of approval:

2. That the sign shall be setback at least ten feet from the property line.

Approve Docket No. SCBA 06-10 to permit installation of the wall sign in accordance with the sign drawing submitted April 28, 2016 by Creative Edge Visual Solutions, on behalf of Windy City Linen, located at 1150 Willis Avenue, Wheeling, Illinois;

On the roll call, the vote was as follows:

AYES:	Commissioners Issakoo, Johnson, Powers, Ruffatto, Sianis, Zangara
NAYS:	None
ABSENT:	Commissioner Dorband
PRESENT:	None
ABSTAIN:	None

There being six affirmative votes, the motion was approved.

DRAFT

7. ITEMS FOR REVIEW

A) Docket No. 2016-11
Northgate Crossing
100-600 Burlington Circle, 100-300 Hudson Court, 100 Wabash Way, and 267 Northgate Parkway
Approval of an Amendment to a Planned Unit Development for a Multi-Family Residential Development

See Findings of Fact and Recommendation for Docket No. 2016-11.

Commissioner Powers moved, seconded by Commissioner Johnson to continue Docket No. 2016-11 to May 26, 2016. The motion was approved by a voice vote.

On the roll call, the vote was as follows:

On the roll call, the vote was as follows:

AYES: Commissioners Issakoo, Johnson, Powers, Ruffatto, Sianis, Zangara
NAYS: None
ABSENT: Commissioner Dorband
PRESENT: None
ABSTAIN: None

There being six affirmative votes, the motion was approved.

The Commission took a break at 8:22 p.m. and reconvened at 8:27 p.m.

B) Docket No. 2016-10
Village of Wheeling
Amendments to Title 19, to Address Massage Establishments

See Findings of Fact and Recommendation for Docket No. 2016-10.

Commissioner Issakoo moved, seconded by Commissioner Sianis to recommend approval of Docket No. 2016-10, amending Title 19, Zoning, of the Wheeling Municipal Code, as illustrated in the document titled "Draft for hearing – May 12, 2016".

On the roll call, the vote was as follows:

AYES: Commissioners, Issakoo, Johnson, Powers, Ruffatto, Sianis, Zangara
NAYS: None
ABSENT: Commissioner Dorband
PRESENT: None

DRAFT

ABSTAIN: None

There being six affirmative votes, the motion was approved.

Commissioner Powers moved, seconded by Commissioner Issakoo to close Docket No. 2016-10. The motion was approved by a voice vote.

8. APPROVAL OF MINUTES – April 28, 2016 (includes Findings of Fact for Docket No. 2015-6A&B and partial findings for Docket No. 2016-9)

Commissioner Johnson moved, seconded by Commissioner Sianis to approve the minutes dated April 28, 2016 as proposed. The motion was approved by a voice vote.

9. OTHER BUSINESS

Ms. Jones reminded the Commission about the joint special meeting between the Plan Commission and the Village Board on Monday, May 23. It will take place at the Public Works lunch room. The meeting starts at 6:30 p.m. with social time and dinner at 6:00 p.m.

10. ADJOURNMENT

Commissioner Powers moved, seconded by Commissioner Zangara to adjourn the meeting at 8:40 p.m. All were in favor on a unanimous voice vote and the meeting was adjourned.

Respectfully submitted,

_____
Steve Powers, Secretary
Wheeling Plan Commission

DISTRIBUTED TO THE COMMISSION 5.20.2016
FOR APPROVAL ON 5.26.2016

DRAFT

DRAFT DOCKET NO. 2016-10

FINDINGS OF FACT
AND RECOMMENDATION

To: Village President and Board of Trustees

From: Wheeling Plan Commission/Sign Code Board of Appeal

Re: Docket No. 2016-10
Village of Wheeling
Amendments to Title 19, to Address Massage Establishments

The Village of Wheeling, is seeking amendments to Title 19, Zoning, of the Wheeling Municipal Code, to address massage establishments, which includes amendments to the following chapters and sections of the Zoning Code: (1) Chapter 19-01, Definitions, (2) Chapter 19.10.060 Non-Residential Use Regulations, (3) Appendix A, Use Table, and associated sections

Chairman Ruffatto called Docket No. 2016-10 on May 12, 2016. Present were Commissioners Issakoo, Johnson, Powers, Ruffatto, Sianis and Zangara. Commissioner Dorband was absent with prior notice. Also present were Brooke Jones, Senior Planner and Mallory Milluzzi, Village Attorney.

Ms. Jones explained that due to operational trends in massage establishments and the Village's concern that the current Code lacks appropriate framework for oversight of massage establishments, the Village enacted a moratorium on the development of message establishments on May 4, 2016. At this time, amendments to Title 19 Zoning are being presented to properly address these uses associated with massage therapy. Currently the Zoning Code defines massage establishments as a type of personal service. Also, all massage establishments as a personal service establishment are permitted in commercial districts and in most mixed use districts. They are not required to be special uses.

Ms. Jones provided a summary of the proposed amendments presented in the Staff Report.

- Remove massage establishments from the definition of personal service establishment.
- Define accessory massage therapy within other primary uses such as medical, athletic training and day spas.
- Create a new subsection under Non Residential Use regulations that provides the following specific guidelines.
    a) Allows accessory massage therapy to medical office and health clinics.
    b) Requires special use approval for accessory massage therapy to day spas or athletic training facilities when the massage service is provided in a private room.
    c) Requires massage therapy principle uses to be located on the ground floor.
    d) Requires establishments with private rooms to have a public entrance visible from the street or from a main parking area.
    e) Required disclosure of business operations such as staffing, hours of operation, floor plan and etc. in the special use approval legislation.

Ms. Jones stated the use table would be amended to accommodate the new special use accessory

massage therapy definition and the definition of a massage therapy as its own use. Ms. Jones provided a copy of the proposed use table. Massage establishments were added in as a principle use in the business district and they would require special use approval. Personal service establishments such as day spas with massage therapy in a private room would require special use approval.

Ms. Jones noted that recreation and instructional facilities would require a special use if they had massage therapy in a private room.

Ms. Jones reported that massage establishments in the MX districts are allowed only as special uses. Also, in the MX districts recreation and instructional facilities with accessory massage in private rooms require special use approval. Industrial districts currently do not allow spas and other personal service establishments so the only thing that is addressed in the industrial districts is the recreational and instructional facilities. If they have accessory massage in the industrial districts in these types of facilities, then they require special use approval.

Commissioner Johnson asked for the theory behind the ground floor requirement. Ms. Jones explained they want it to be in plain sight. The reputable establishments would need foot traffic and drive by visibility in order to thrive. Commissioner Johnson referred to buildings with retail on the first floor and doctor's office on the second floor. Ms. Jones explained they were not concerned about doctor's offices.

Chairman Ruffatto questioned if a doctor needed to be present. Ms. Jones explained it needed to be a medical professional but if they meet the definition of medical office or health clinic they don't have concern for them performing massage therapy.

Commissioner Zangara questioned assisted living facilities. Village Attorney Milluzzi explained it would depend if it was a private or open room. A special use is only required for private rooms. Ms. Jones didn't think it met the definition since it wasn't a massage establishment.

Commissioner Issakoo moved, seconded by Commissioner Sianis to recommend approval of Docket No. 2016-10, amending Title 19, Zoning, of the Wheeling Municipal Code, as illustrated in the document titled "Draft for hearing – May 12, 2016".

On the roll call, the vote was as follows:

AYES:	Commissioners, Issakoo, Johnson, Powers, Ruffatto, Sianis, Zangara
NAYS:	None
ABSENT:	Commissioner Dorband
PRESENT:	None
ABSTAIN:	None

There being six affirmative votes, the motion was approved.

Commissioner Powers moved, seconded by Commissioner Issakoo to close Docket No. 2016-10. The motion was approved by a voice vote.

DRAFT

Respectfully submitted,

_____

Jim Ruffatto, Chairman
Wheeling Plan Commission/
Sign Code Board of Appeals

DISTRIBUTED TO THE COMMISSION 5.20.2016
FOR APPROVAL ON 5.26.2016

DRAFT

DRAFT DOCKET NO. 2016-11

FINDINGS OF FACT AND RECOMMENDATION

To: Village President and Board of Trustees

From: Wheeling Plan Commission/Sign Code Board of Appeal

Re: Docket No. 2016-11
Northgate Crossing
100-600 Burlington Circle, 100-300 Hudson Court, 100 Wabash Way, and 267 Northgate Parkway
Approval of an Amendment to a Planned Unit Development for a Multi-Family Residential Development

REVA Development Partners, LLC, applicant, is seeking an amendment to Ordinance No. 4876, which granted Final Planned Unit Development Approval for the Northgate Crossing Multi-Family Residential Development, for the purposes to amending the site plan and unit mix among the existing development and to expand the development to include 12 additional townhome units.

Chairman Ruffatto called Docket No. 2016-11 on May 12, 2016. Present were Commissioners Issakoo, Johnson, Powers, Ruffatto, Sianis and Zangara. Commissioner Dorband was absent with prior notice. Also present were Brooke Jones, Senior Planner and Mallory Milluzzi, Village Attorney.

Ms. Jones noted there was an update since the Staff Report was written regarding storm water engineering. Staff now feels more confident that the plans being presented tonight would be consistent with the engineering plans that are under review for approval by MWRD. If anything, Staff thinks there could be minor changes to the landscape plan due to final engineering plans. As such, Staff has drafted a condition of approval that would allow landscape plan adjustments provided that the general design and plant pallet is maintained in substantial compliance with the landscape plans presented tonight. If the Plan Commission is comfortable with the overall site plan and details provided tonight, then Staff feels confident that the engineering plans will be consistent with the site configuration and layout and Staff believes it was ready for public review and approval.

Mr. Matt Nix, Reva Development Partners and Mr. Blake Lunt, Real Estate Director, Reva Development Partners were present and sworn in.

Mr. Nix reported they were going into phase three. Phase one and two included the Kenney property and the church property with 288 units. They are presenting the third and final phase for twelve townhome units. They have been working with Village Staff, architects and planners to come up with a complimentary third phase to the Northgate Crossing project. Three of the nine apartment buildings for phase one and two were complete which include roughly 96 units. There are currently about 60 leases with approximately 40 people already moved in. They have started going vertical on the last building and expect to be completely under roof in about 60 days. They expect to be complete with the phase 1 and 2 project of 288 units by yearend. They are very pleased with the response from the marketplace.

Mr. Nix provided an image of the townhome product being proposed in phase three. It is a single family three-story attached product with the front doors facing the street and the garages in the rear with access from an alley. He provided photographs from a similar finished project in Vernon Hills. They are proposing similar finishes to what was being used in phase one and two with open floor plans, granite countertops, stainless steel appliances, large bedrooms with walk-in closets and all of the finishes and amenities you would find in a "for sale" product. They will be rental townhomes and part of the overall project. The residents moving into the townhomes will have full access to the club house, fitness center, 24-hour maintenance and all other amenities that go with the apartments.

The townhomes consist of a seven-unit building and a five-unit building with front doors along Northgate Parkway and the buildings oriented to have nice views of the pond and also to frame the center green space. They think it will really compliment the gateway entrance as you head south down Northgate Parkway and approach the Village Center. They will grade up toward the front doors with three to five steps. You enter on a landing and go half a flight down to a lower den area and garage or a half a flight up to the main living area with the kitchen, living room, dining room and then up a full flight of stairs to the three bedrooms. The units are designed to have the master bedroom looking forward with views across Northgate Parkway to the green space and pond and then two smaller bedrooms in the rear with a two-car attached garage. They are basically all the same unit type. The interior units are 1,971 square feet and 2,029 square feet for the end units including a bump out bay window. Each townhome has three bedrooms and two baths on the upper level, a powder room on the main living level and a two-car garage. Elevations were provided. Mr. Nix confirmed the materials would be identical to the current buildings with a mix of masonry, hardy shake siding and hardy siding. They are proposing the green olive pallet. The rear includes the brick element raised in the center. There is a balcony off the kitchen with sliding glass doors to provide an outdoor area for the residents.

Mr. Nix mentioned there was a waiting list at the similar Vernon Hills project.

Mr. Nix reported they were adding a dog park in the southeast corner of the site immediately east of building nine. It will be gated with a separate areas for small and large dogs. It is consistent with what has been done at the other projects. The fire hydrant will remain on the outside of the fence. He felt the dog park would be a nice stopping point to gather on the way to Heritage Park and a community building element.

Mr. Nix noted they have requested a modification to the Georgian unit plan. It was originally a one-bedroom with den unit and comments from the marketplace added a closet and door to the den to add more flexibility in how they use the room. It may have triggered a modest change in the parking requirement. He felt the den could be used for a small child so they don't really see it generating any additional parking demand.

Mr. Nix referred to the landscape plan. He explained the foundation plantings were consistent with what has been done throughout the project. In some cases they have added some enhancement where they can. It is their intent to install irrigation in the landscaped areas. They are using heavy landscaping and berming to minimize any headlights that would impact the end units.

DRAFT

Chairman Ruffatto opened the discussion to the public.

From the audience, Ms. Emilie Reynolds, 1099 North King Charles, Palatine was sworn in. She has a rental property adjacent to the proposed location. Her inquiries related to the impact the project would have on her rental property. She asked the following questions.

- Who would monitor the dog park for lighting, repair and clean-up?
- Is there a limit to the number of dogs in each rental unit?
- Are there any designated handicapped parking spaces on the property?
- Snow removal/storage plan?
- Will there be adequate room for emergency vehicles to enter the property?
- How many guest parking spaces?
- Is there an intention or a desire to turn the townhomes into "for sale" units in the future? She felt there were already a lot of rentals in the area.

No one else from the audience came forward with questions or comments.

Mr. Nix addressed Ms. Reynolds' questions. Mr. Nix explained there were limitations on the pets at their projects. The pets have to be registered and there were restrictions on certain breeds. The limit is two dogs and a total pound restriction. They also mandate cleanup throughout the site and have doggy pickup stations. He explained if there ever was a problem, they have the right to do DNA testing for the dogs. The dog park would be maintained by their staff. There is a full-time, on-site maintenance staff and would be consistent with the maintenance of the rest of the property.

Mr. Nix confirmed they met the required handicap parking on the site. Ms. Jones confirmed the existing site on the west side met the Illinois accessibility code for handicapped parking. She was uncertain about the code for the townhome use. Mr. Nix stated to the best of his knowledge they were meeting all the requirements. Chairman Ruffatto asked Staff to check the Village's ordinance. Ms. Jones stated the petitioner would have to comply with the code to receive the building permit.

Chairman Ruffatto referred to the snow removal and storage. Mr. Nix explained they contract with a snow removal company. They have designated areas in phase one and two for snow removal and storage. He thought it was in the southern portion of the site. He confirmed if there was extensive snow they would haul it off using bucket trucks.

Chairman Ruffatto referred to emergency vehicles. He explained the Fire Department reviews the plans and any issues would be noted. There were no issues included in the Staff Report. Mr. Nix stated that they had met with Chief MacIssac a couple of times and added hydrants in the rear and fronts of the buildings.

Chairman Ruffatto referred to guest parking. Mr. Nix confirmed there were two spaces in the garage and two on the full apron and referred to perpendicular and parallel parking on the plans. There are four head in spaces behind the building two and four parallel spaces. Ms. Jones stated the new 12 townhome area exceeds the guest parking requirements. The guest parking requirement is .4 spaces per unit so they are required 5 spaces for guests and they are providing 8 spaces. Mr. Nix explained

it was part of the overall development so there was parking immediately across the street if someone was having a big party there would be access to parking throughout the site.

Chairman Ruffatto questioned if it was a possibility to sell the townhomes in the future. Mr. Nix explained the product they were building was a "for sale" product. They come from a long history of building "for sale" product and this is what they would have built to sell 10 years ago. He explained the market had changed and people now prefer to rent versus own. Typically, they would plat the building and then go in and do a plat of re-subdivision if they were to ever re-subdivide. They don't have any current plans to do it but it could make sense in the future.

Chairman Ruffatto explained Ms. Jones had explained the reason the 12 unit development wasn't separate from the changes to the bedroom was because it was part of the PUD and changes were being made to the overall PUD. Ms. Jones explained the townhome development shares the amenities with the apartments across the street and shares storm water detention so that is the reason it was one large development. They are amending it all at one time to address the existing site and the proposal for the townhomes at the same time.

Commissioner Johnson was hesitant because of all the relief they were requesting from Village Code. He expressed a concern that there was only one exit from the units. Mr. Nix mentioned the Fire Chief signed off on the plan. The townhomes were fully sprinklered and was a standard product. He noted the garage door was also an alternate exit.

Chairman Ruffatto asked the petitioner to explain the variations being requested. Ms. Jones read the following variations.

1. Reduce the total parking for the entire development (east and west sides) from the required 601 stalls to 595 stalls. Mr. Nix explained it relates to the modification to the one bedroom den. Ms. Jones noted there were three surplus spaces with the 12 unit townhomes that were counted towards the total. The current PUD for Northgate Crossing allowed a parking variation for one stall. Now they are proposing a variation of six stalls.
2. Allow 12 principle buildings on a single lot while the Code states that no more than one principle building per zoning lot. There was a variation for 10 principle buildings but now there is a variation for a total of 12. Ms. Jones confirmed it was considered one zoning lot/one PUD.
3. Reduce the minimum required building setback on the interior side for the townhomes from 30' to 15' (building one).
4. Reduce the minimum required building setback for the front of the townhomes from 30' to 7.76' (building two).
5. Reduce the minimum required distance between the two-story buildings from 30' to 24.75'.
6. Increase the maximum number of units per townhome building from six to seven.
7. Permit the rear facades of the townhomes to have garage doors without adjacent exit doors.
8. The plan as proposed would require Code relief to permit the use of steps in the Northgate Parkway right-of-way. The Village Engineer recommended pushing them back on to the private property. Mr. Nix agreed to shift them out of the right-of-way.

DRAFT

Commissioner Johnson felt it would be difficult to move the steps out of the right-of-way. Mr. Nix explained they would push the grade back towards the building, have continuous steps and add a handrail.

Mr. Nix referred to the sidewalk in the right-of-way and explained he spoke with Ms. Jones and they could either grant a sidewalk easement or dedicate a little more right-of-way to follow the boundary of the sidewalk.

Commissioner Johnson questioned the parking demand at Northgate Crossing per unit. Mr. Nix felt it was a little early to tell but referred to the discussion when they started the project and they found the actual usage was between 1.3 – 1.5 cars per unit. They are now at almost 2. The townhomes specifically are 4.5. He mentioned the Vernon Hills project has more than enough parking with a similar configuration.

Commissioner Johnson questioned why they didn't change the seven unit building to six units for a total of 11 units in order to eliminate some of the setback issues and variations. Mr. Nix explained it was an incredibly small scale project for them to undertake. They would not be doing this project if they were not building 288 units across the street. He explained they had run into tremendous complications in developing the site and extensive infrastructure costs. He explained it related to scale and economics. He felt the more frontage, the more of a streetscape they could create along Northgate Parkway, the better it would look. Commissioner Johnson questioned if there was room for two 6 unit buildings. Mr. Nix felt there was probably room but explained they were looking for variations in the architectural appeal. He felt 6 and 7 unit buildings were more interesting.

Commissioner Johnson referred to the mention of using pavers in the rear for the drive. Mr. Nix explained pavers were the most economical detention solution. After a conversation with their engineer this morning, they have decided not to include pavers in the alley.

Commissioner Zangara referred to the access to the west. He questioned if they were proposing crosswalks or signals especially for use during rush hour. Mr. Nix explained they were open to installing a crosswalk with yield signs with the Village's permission. He noted there were currently a crosswalk and a stop sign at Strong and Northgate (about 150' north).

Commissioner Zangara questioned the location for the air conditioning units for the townhomes. Mr. Nix explained they could put the air conditioning units in the front by the steps with a screen of heavy landscaping or put them in between the driveways under the balconies with bollards. They prefer to put them in the front because of the noise.

Commissioner Zangara referred to the lighting plan and the representation of curbs in between each driveway. Mr. Nix explained they usually terminate the asphalt and then use hard packed granite along with plants. He mentioned curbs usually get damaged.

Commissioner Zangara questioned the depths of the decks. Mr. Nix stated they were between 4.5 - 5' deep and were large enough for a couple of chairs and small table. He confirmed grills were not allowed on the decks.

DRAFT

Commissioner Zangara questioned the reason they wouldn't add a staircase in the back for guest use. Mr. Nix explained they had looked at the idea but explained it was a totally different floor plan and fundamentally didn't work for the proposed square footage.

Mr. Nix reported they were not allowing grills but were offering three or four grilling stations throughout the community. They are trying to create a community gathering area around the clubhouse and pool area.

Commissioner Zangara referred to the guest parking and noticed there weren't any sidewalks from the back to the front doors. Mr. Nix confirmed there would be a walkway between the two buildings.

In reply to Commissioner Zangara's question, Mr. Nix explained each unit would have a trash container on wheels and rolled out on trash day. He was unsure about the mail service but thought there would be a mounted box in the island that would serve all 12 units.

Commissioner Zangara referred to the fence at the dog park. He referred to a previous concern that kids could put their hands through the fence. He questioned if it was possible to add some type of screening as a preventative measure. Mr. Nix explained they typically use a split rail fence with a thin gauge mesh below so the little dogs can't climb under. He mentioned it was consistent with dog parks in Chicago but agreed to look into the idea.

Commissioner Zangara questioned if there was any opportunity to create a small parking lot in the area with 6 parking stalls to solve the parking issue. Mr. Nix stated that west and south of the dog park was all floodplain.

In reply to Commissioner Zangara's question, Mr. Nix confirmed it was grass in the dog park.

Commissioner Zangara referred to the landscaping by the townhomes and questioned if there was enough visibility to pull out. Mr. Nix explained the landscaping was more concentrated on the berm to block out the headlights for the end units. He could revisit it with Staff if it was a concern.

In reply to Commissioner Powers' question, Mr. Nix explained there were three storm water plans being finalized for phase three. The primary retention pond was oversized so there is excessive capacity beyond what was required in phase three. He believes the Village Engineers and MWRD were finalizing plans that relates to the first flush and storing some of the water on site and then conveying some of the water through either a ten year or 100 year flood lift station into the pond on the west side of the street. Ms. Jones confirmed phase three was being treated as part of the whole Northgate Crossing site. They can use the capacity in the pond across the street or the use of the townhome area.

Commissioner Powers requested details regarding the infiltration trench behind the building. Mr. Nix explained it related to the storm water strategy.

DRAFT

Commissioner Powers referred to the front porch light on the photometric plan. He didn't think the walks going up to the front porch had any light. He questioned if the front porch lighting could be increased to illuminate the front walkway. Mr. Nix confirmed the proposed lighting package was very typical of other projects.

Commissioner Powers preferred 6 unit and 5 unit buildings. In reply to Commissioner Powers' question, Ms. Jones confirmed the width between the buildings was 25'.

Commissioner Sianis referred to light escaping the site on the north site near an apartment complex. He expressed concern for the residents to the north.

Commissioner Sianis mentioned the units were not ADA accessible. He was unsure it would be easy accessible for a disabled guest. Mr. Nix explained that a three-story townhome was typically not for the disabled.

Commissioner Sianis agreed that the north building should be reduced to a six unit building but understands the PUD allows some freedom.

In reply to Commissioner Sianis' question, Ms. Jones confirmed the proposed colors were previously approved.

Commissioner Sianas questioned the sanitary service. Mr. Nix confirmed each unit would have their own sanitary service and would run in the rear of the building.

Commissioner Issakoo agrees with two six unit buildings. He asked for an explanation of the PUD. Ms. Jones explained a PUD allows for variations a little more readily than a normal site plan public hearing review. It is expected there would be multiple variations. Ms. Jones agreed it was a variation for seven units in one building, but wasn't a concern of Staff. Village Attorney Milluzzi stated the statement of intent in the Code for PUDs was to promote maximum benefit from the area site providing opportunities to maximize economical and efficient use of the land in ways that may not be possible under conventional zoning regulations.

Commissioner Issakoo asked for details regarding the parking. Mr. Nix explained each apartment building had 10 individual garages and a surface parking space in front of the garage.

Commissioner Issakoo questioned if there were school impact fees. Ms. Jones confirmed there were impact fees for the school district, park district and library district. The Naperville Model is used based on a bedroom count.

Chairman Ruffatto questioned the type of screening to be used to the north and east of building one. Mr. Nix didn't think it was listed on the landscape plan but stated it was their intent and desire to put a board on board fence along the eastern boundary similar to what was used along the western boundary of phase one and two. He was open to using a fence along the north to the end of the parking lot. Chairman Ruffatto wants it added to the landscape plan along with the materials. Mr. Nix stated that it would be similar to the board on board fence on the western boundary.

DRAFT

Chairman Ruffatto explained he wants to see complete updated plans before voting on it and prior to going to the Village Board including the following:

- Plans for the parking show pavers but should state asphalt;
- Details for the space in between the garages;
- Sidewalk details;
- Mailbox location; and
- Steps for the first unit in the south building still shown in the right-of-way.

Chairman Ruffatto was in agreement with the seven and five buildings but felt the general consensus from the Plan Commission was six and five. He asked the petitioner to consider making building one six units instead of seven units. Ms. Jones requested further explanation. Chairman Ruffatto explained he wants to see more economics as to why seven made more sense. He asked for the thought process behind it. Mr. Nix stated that they own the triangle piece that came with the land they originally purchased. If they didn't have the triangle they would not be in front of the Commission. Because they are currently developing across the street they can efficiently execute the plan. They would not start this plan if the crews were gone. He explained the timing to get started in the ground was critical and the unit count to make it economically viable. He stated the land development cost alone was three times the cost of the land. They really want to do the project because they think it fits and completes the parcel and cleans up their front door. He asked if the 12 units were really an issue, he needed to know tonight.

Mr. Nix preferred to document the changes to the plan as conditions to the final approval versus coming back before the Plan Commission. Chairman Ruffatto was not in favor of making them conditions.

Ms. Jones stated the next meeting was on May 26.

Commissioner Powers asked about the location of the air conditioning units. Mr. Nix prefers the units to be in the fronts and sides with screening. The Commission was in agreement.

Commissioner Powers questioned if there would be any handicapped parking. Chairman Ruffatto explained Staff would look at the ADA requirements for this type of development.

Chairman Ruffatto took a poll regarding the proposed seven and five unit buildings. He asked if it was a deal breaker.

Chairman Ruffatto: OK with it.

Commissioner Johnson: Deal breaker – concerned with fencing and how it relates to the Fire Department.

Commissioner Issakoo: Not a deal breaker.

Commissioner Sianis: Not a deal breaker.

Commissioner Zangara: Not a deal breaker.

Commissioner Powers: Not a deal breaker.

Village Attorney Milluzzi asked if there was a consensus for the crosswalk across the street. Chairman Ruffatto felt everyone would want a crosswalk. He suggested between buildings one and two. Mr. Nix felt the curve of the street might be an issue. Ms. Jones reported that Staff had looked at it preliminarily and there were some concerns for safety due to the curve and grading. They would not necessarily want a midblock crosswalk. Chairman Ruffatto suggested to the north of the building. Ms. Jones felt it would be the most logical place but they would need to study it to see if it was safe enough to install a crosswalk. Ms. Jones confirmed there wasn't an existing crosswalk at Egidi but there was a depressed curb on the east side of Northgate Parkway. Ms. Jones explained a condition could be added later.

Chairman Ruffatto mentioned he had seen yellow posts in the middle of the streets in Chicago. He suggested looking into it for this location. Commissioner Johnson mentioned Park Ridge also had them.

Commissioner Johnson questioned how a visitor would access the townhomes. Chairman Ruffatto explained a sidewalk would be added between buildings one and two.

Chairman Ruffatto questioned if they would use directional signage for the visitor parking. Mr. Nix agreed to add it.

Ms. Jones questioned if the Commission wants the petitioner to finalize the issue with the public walk on private property. Chairman Ruffatto questioned if the petitioner would dedicate it or grant an easement. Mr. Nix agreed to grant an easement.

Chairman Ruffatto asked for an explanation of the MWRD plans. Mr. Nix reported there were three solutions but as of this morning they have narrowed it down to two solutions. He thinks they'll know which direction within two weeks. Ms. Jones explained it usually happened at final engineering prior to building permit. She mentioned the MWRD review and discussions were happening much sooner than normal for a similar development. She explained the reason was because they were tying into the existing development on the west side of the street.

Ms. Jones read the following conditions aloud.

1. Provided that the design and plant pallet is maintained in substantial compliance with the landscape plans submitted April 14, the landscape plan may be adjusted as needed for final storm water system approval which is granted by MWRD.
2. Irrigation shall be provided per Code.
3. The A/C condenser on the front of the buildings shall be heavily screened from view with landscaping and shown on the plans.
4. Steps shall be removed from the public right-of-way and the plans shall be revised.
5. To address the location of the public walk on the private property, either the sidewalk shall

DRAFT

be dedicated to the Village for public right of way or an easement for public use shall be placed on the private property.

6. Allow for the placement of a sidewalk through the green space between the townhome buildings connecting the public walk to the rear of the units.
7. A board on board wood fence shall be installed on the northern and eastern property lines to screen the parking.
8. Address the following: parking pavers vs. asphalt, islands on the lighting plan, mailboxes, trash and snow removal, railing locations/design/materials and feasibility of unit configuration (6/6 vs 5/7).
9. If Staff determines that an additional crosswalk is feasible and safe then it shall be installed.

Mr. Nix questioned if they should show a fence on the northern boundary. Chairman Ruffatto preferred a partial fence from the parking to the end of building. Commissioner Johnson suggested tying it back to the building. The Commission was in agreement.

Commissioner Issakoo questioned the alternative if the addition of a crosswalk was deemed unsafe. Chairman Ruffatto explained they would have to go to Strong Street. Commissioner Issakoo felt someone would just cross the street in the middle. Commissioner Issakoo was less OK with the townhomes if there wasn't a feasible way for people to cross the street safely. He explained that it was more of a deal breaker to him than seven and five.

Commissioner Johnson wanted to see a crosswalk but didn't know if there was a good spot for it.

Commissioner Powers could go with or without the crosswalk.

Commissioner Sianis was OK without the crosswalk.

Commissioner Zangara was interested in getting Staff's comments.

Chairman Ruffatto was interested in getting Staff's comments.

In reply to Commissioner Powers' question, Mr. Nix stated the depth of each building was about 37'. Commissioner Powers questioned if lighting was needed. Mr. Nix agreed to look into it.

Staff needs to receive the information by Tuesday, May 17.

Commissioner Powers moved, seconded by Commissioner Johnson to continue Docket No. 2016-11 to May 26, 2016. The motion was approved by a voice vote.

On the roll call, the vote was as follows:

AYES:	Commissioners Issakoo, Johnson, Powers, Ruffatto, Sianis, Zangara
NAYS:	None
ABSENT:	Commissioner Dorband
PRESENT:	None

DRAFT

ABSTAIN: None

There being six affirmative votes, the motion was approved.

Respectfully submitted,

_____

Jim Ruffatto, Chairman
Wheeling Plan Commission/
Sign Code Board of Appeals

DISTRIBUTED TO THE COMMISSION 5.20.2016
FOR APPROVAL ON 5.26.2016

DRAFT