Go To Regular Agenda

PUBLIC NOTICE

IN ACCORDANCE WITH THE APPLICABLE STATUTES OF THE STATE OF ILLINOIS AND ORDINANCES OF THE VILLAGE OF WHEELING, NOTICE IS HEREBY GIVEN THAT

THE SPECIAL MEETING OF THE PRESIDENT AND BOARD OF TRUSTEES OF THE VILLAGE OF WHEELING WILL BE HELD TUESDAY, SEPTEMBER 6, 2016 AT 5:45 P.M.
IN THE ADMINISTRATIVE CONFERENCE ROOM, WHEELING VILLAGE HALL
2 COMMUNITY BOULEVARD, WHEELING ILLINOIS
VILLAGE PRESIDENT DEAN S. ARGIRIS PRESIDING

DURING WHICH MEETING IT IS ANTICIPATED THERE WILL BE DISCUSSION AND CONSIDERATION UPON THE MATTERS CONTAINED IN THE FOLLOWING:

1. **CALL TO ORDER**

2. **ROLL CALL FOR ATTENDANCE**

3. **DISCUSSION RE:** Interview of Plan Commission Applicant(s)

4. **EXECUTIVE SESSION**

5. **ADJOURNMENT**

IF YOU WOULD LIKE TO ATTEND A VILLAGE MEETING BUT REQUIRE AN AUXILIARY AID, SUCH AS A SIGN LANGUAGE INTERPRETER, PLEASE CALL 847-499-9085 PRIOR TO THE MEETING.

PUBLIC NOTICE

IN ACCORDANCE WITH THE APPLICABLE STATUTES OF THE STATE OF ILLINOIS AND ORDINANCES OF THE VILLAGE OF WHEELING, NOTICE IS HEREBY GIVEN THAT

THE SPECIAL MEETING OF THE LIQUOR CONTROL COMMISSION WILL BE HELD ON TUESDAY, SEPTEMBER 6, 2016 AT 6:30 P.M. IN THE BOARD ROOM, WHEELING VILLAGE HALL, 2 COMMUNITY BOULEVARD, WHEELING ILLINOIS CHAIRPERSON DEAN S. ARGIRIS PRESIDING

DURING WHICH MEETING IT IS ANTICIPATED THERE WILL BE DISCUSSION AND CONSIDERATION OF AND, IF SO DETERMINED, ACTION UPON THE MATTERS CONTAINED IN THE FOLLOWING:

1. **CALL TO ORDER**

2. **PLEDGE OF ALLEGIANCE**

3. **ROLL CALL FOR ATTENDANCE**

4. **APPROVAL OF MINUTES** Special Meeting of August 15, 2016
   Special Meeting of August 22, 2016

5. **IN CONSIDERATION OF A REQUEST FOR A CLASS B-1-V LIQUOR LICENSE**

   Priester Aviation, LLC
   1061 S. Wolf Road
   For three (3) events to be held: September 16, 2016
   Date to be Determined
   Date to be Determined

6. **ADJOURNMENT**

THIS MEETING WILL BE TELEVISED ON WHEELING CABLE CHANNELS 17 & 99.

IF YOU WOULD LIKE TO ATTEND A VILLAGE MEETING BUT REQUIRE AN AUXILIARY AID, SUCH AS A SIGN LANGUAGE INTERPRETER, PLEASE CALL 847-499-9085 AT LEAST 72 HOURS PRIOR TO THE MEETING.

PUBLIC NOTICE
IN ACCORDANCE WITH THE APPLICABLE STATUTES OF THE STATE OF ILLINOIS AND ORDINANCES OF THE VILLAGE OF WHEELING, NOTICE IS HEREBY GIVEN THAT

THE REGULAR MEETING
OF THE PRESIDENT AND BOARD OF TRUSTEES OF THE VILLAGE OF WHEELING
WILL BE HELD ON TUESDAY, SEPTEMBER 6, 2016
IMMEDIATELY FOLLOWING THE SPECIAL MEETING OF THE LIQUOR CONTROL COMMISSION
IN THE BOARD ROOM, WHEELING VILLAGE HALL,
2 COMMUNITY BOULEVARD, WHEELING, ILLINOIS
VILLAGE PRESIDENT DEAN S. ARGIRIS PRESIDING

DURING WHICH MEETING IT IS ANTICIPATED THERE WILL BE DISCUSSION AND CONSIDERATION OF AND, IF SO DETERMINED, ACTION UPON THE MATTERS CONTAINED IN THE FOLLOWING:

1. CALL TO ORDER

2. PLEDGE OF ALLEGIANCE

3. ROLL CALL FOR ATTENDANCE

4. APPROVAL OF MINUTES Regular Meeting of August 1, 2016

5. CHANGES TO THE AGENDA

6. PROCLAMATIONS, CONGRATULATORY RESOLUTIONS AND AWARDS
Constitution Week – September 17–23, 2016

7. APPOINTMENTS AND CONFIRMATIONS Plan Commissioner

8. ADMINISTRATION OF OATHS Karen Karaffa – Deputy Village Clerk
Plan Commissioner

9. CITIZEN CONCERNS AND COMMENTS

10. STAFF REPORTS

11. CONSENT AGENDA - All items listed on the Consent Agenda are considered to be routine by the Village Board and will be enacted by one motion. There will be no separate discussion of these items unless a Board member or citizen so requests, in which event the item will be removed from the general order of business and considered after all other Agenda items.

A. **Resolution** Appointing Karen Karaffa Deputy Village Clerk

B. **Resolution** Authorizing a Public Fireworks Display by Wheeling High School on October 7, 2016 and Waiving the Required $5,000.00 Security Bond

C. **Resolution** Granting Final Acceptance of Public Improvements within the Millbrook Pointe Subdivision

D. **Resolution** Authorizing and Directing the Village President to Enter into a Contract with Liturgical Publications, Inc. to Provide Printing Services for the Village of Wheeling Newsletter

12. OLD BUSINESS NONE

13. NEW BUSINESS **All listed items for discussion and possible action**

A. **Resolution** Granting a Tag Day Permit to Illinois State Knights of Columbus Charities, Inc. to Conduct a Tag Day Event on September 17 & 18, 2016

B. **Resolution** Authorizing the Village President and Clerk to Renew the Food Service Contract with Hoffman House Catering for the Wheeling Pavilion Senior Center Lunch at Pavilion Congregate Dining Program and Approve and Execute a First Amendment to the Food Service Contract with Hoffman House Catering for the Wheeling Pavilion Senior Center Lunch at Pavilion Congregate Dining Program

C. **Resolution** Authorizing the Village Manager to Execute Change Order No. 1 to the Contract with Manhard Consulting For Engineering Services For Wolf Court Diversionary Channel Crossing And Roadway

D. **Resolution** Accepting a Bid and Approving a Contract with Midwest Brickpaving for the 2016 Brick Paver Maintenance (Resetting) Project

E. **Ordinance** Granting Special Use-Site Plan Approval for a Social Service Facility at 210-212 N. Wolf Road [Docket No. 2016-16]

F. **Resolution** Authorizing the Village President to Execute a Real Estate Purchase Contract (Fox Point Mobile Home Park, 573-601 S. Milwaukee Avenue)

G. **Resolution** Commemorating the Renaming of East Drive in the Village of Wheeling as Gangnam Drive

14. OFFICIAL COMMUNICATIONS

15. APPROVAL OF BILLS August 11-August 31, 2016

16. EXECUTIVE SESSION

17. ACTION ON EXECUTIVE SESSION ITEMS, IF REQUIRED

18. ADJOURNMENT

THIS MEETING WILL BE TELEVISED ON WHEELING CABLE CHANNELS 17 & 99.
IF YOU WOULD LIKE TO ATTEND A VILLAGE MEETING BUT REQUIRE AN AUXILIARY AID, SUCH AS A SIGN LANGUAGE INTERPRETER, PLEASE CALL 847-499-9085 AT LEAST 72 HOURS PRIOR TO THE MEETING.

Go To Regular Agenda

PROCLAMATION
VILLAGE OF WHEELING

Constitution Week – September 17–23, 2016

WHEREAS, it is the privilege and duty of the American Public to commemorate the two hundred and twenty-ninth anniversary of the drafting of the Constitution of the United States of America by the Constitutional Convention; and

WHEREAS, Public Law 915 guarantees the issuing of a Proclamation every year by the President of the United States of America designating September 17th through 23rd as Constitution Week;

NOW, THEREFORE, I, Dean Argiris, of Wheeling, in the State of Illinois, by virtue of the authority vested in me as Village President, do hereby proclaim September 17th through 23rd as CONSTITUTION WEEK in Wheeling, Illinois, and urge all citizens to reflect on the privilege of being an American with all of the rights and responsibilities which that privilege involves.

DATED at the Village of Wheeling this 6th day of September, 2016.

_____
Dean S. Argiris, Village President

ATTEST:

_____
Elaine E. Simpson, Village Clerk

Go To Regular Agenda

VILLAGE OF WHEELING
LEGISLATIVE COVER MEMORANDUM

AGENDA ITEM NO (S): 11.A
(To be inserted by Deputy Clerk)

DATE OF BOARD MEETING:	September 6, 2016
TITLE OF ITEM SUBMITTED:	Resolution Appointing Karen Karaffa Deputy Village Clerk
SUBMITTED BY:	Jon A. Sfondilis, Village Manager
BASIC DESCRIPTION OF ITEM:	Resolution appointing Karen Karaffa as Deputy Village Clerk to perform the duties of the Village Clerk in the Village Clerk's absence.
BUDGET[1]:	N/A
BIDDING[2]:	N/A
EXHIBIT (S) ATTACHED:	Resolution, memo
RECOMMENDATION:	Approval

[1] *If applicable, provide all budgetary considerations as follows: is the item covered in the current budget; fund(s) the item is to be charged to; expenses per fund(s) and total cost; and necessary transfer(s) or supplemental appropriation(s).*
[2] *If applicable, describe the bidding process and results for purchases and contracts. If applicable, state whether or not any particular city, state or federal program was considered*

Go To Regular Agenda

VILLAGE OF WHEELING ILLINOIS

MEMORANDUM

TO: Village President, Clerk and Board of Trustees

FROM: Jon A. Sfondilis, Village Manager

DATE: August 30, 2016

SUBJECT: Appointing Karen Karaffa Deputy Village Clerk

EXECUTIVE SUMMARY

Karen Karaffa is scheduled to be appointed as the new Deputy Village Clerk during the Regular Board meeting of September 6, 2016.

On August 29, Karen Karaffa began her employment with the Village of Wheeling to fill the position of Administrative Secretary/Deputy Village Clerk vacated by Lisa Leonteos who was recently promoted to the position of Executive Coordinator. In order to officially begin her role as Deputy Village Clerk, Karen Karaffa must be appointed by resolution approved by the Village Board and complete the oath of office to be administered by Clerk Simpson.

I am available to respond to any questions or concerns.

Go To Regular Agenda

RESOLUTION NO. 16 - _____

RESOLUTION APPOINTING KAREN KARAFFA DEPUTY VILLAGE CLERK

WHEREAS, the President and Board of Trustees have been informed by the Village Clerk Elaine E. Simpson that she will be away from the Village from time to time; and

WHEREAS, that the Village Clerk has requested that Karen Karaffa of 915 Rosedale Lane, Hoffman Estates, Illinois, be designated and appointed as Deputy Clerk during her absence; and

WHEREAS, the President and Board of Trustees find that Karen Karaffa is qualified to hold the office of Deputy Clerk and to exercise the powers and duties thereof; and

WHEREAS, Chapter 2.04, Section 2.04.070 of the Municipal Code of Wheeling and Section 3.1-30-10 (65 ILCS 5/3.1-30-10) of the Illinois Municipal Code authorizes the appointment of a deputy clerk necessary to discharge the functions and duties of the Office of Village Clerk; and

WHEREAS, the President and Board of Trustees believe it to be in the best interest of the Village of Wheeling to appoint Karen Karaffa as the Deputy Clerk of the Village of Wheeling.

NOW, THEREFORE, BE IT RESOLVED BY THE PRESIDENT AND BOARD OF TRUSTEES OF THE VILLAGE OF WHEELING, COUNTIES OF COOK AND LAKE, **STATE OF ILLINOIS**, that:

1. The findings set forth hereinabove are hereby incorporated and declared to be the findings of fact and determinations of the President and Board of Trustees;

2. Karen Karaffa is appointed, designated, and confirmed as the Deputy Clerk of the Village of Wheeling during any temporary absence of the Village Clerk; and

3. Karen Karaffa, during her tenure as Deputy Clerk, is authorized and directed to exercise the powers and duties of the Village Clerk in the name of Elaine E. Simpson, Village Clerk, in accordance with the above-referenced provisions of the Municipal Code of Wheeling and the Illinois Municipal Code.

Trustee _____ moved, seconded by Trustee _____, that

Resolution No. 1**6 -** _____ be adopted.

Go To Regular Agenda

President Argiris _____ Trustee Vito _____

Trustee Krueger _____ Trustee Lang _____

Trustee Brady _____ Trustee Papantos _____

Trustee Vogel_____

APPROVED this, _____day of _____ 2016 by the President and Board of Trustees of the Village of Wheeling, Illinois

ATTEST

_____
Dean S. Argiris, Village President

_____
Elaine E. Simpson, Village Clerk

Go To Regular Agenda

VILLAGE OF WHEELING
LEGISLATIVE COVER MEMORANDUM

AGENDA ITEM NO(S): 11.B
(To be inserted by Deputy Clerk)

DATE OF BOARD MEETING: September 6, 2016

TITLE OF ITEM SUBMITTED:

Resolution Authorizing a Public Fireworks Display by Wheeling High School on October 7, 2016 and Waiving the Required $5,000.00 Security Bond

SUBMITTED BY: Keith MacIsaac, Fire Chief

BASIC DESCRIPTION OF ITEM[1]:

Authorizing a public fireworks display as part of the Wheeling High School homecoming celebration.

BUDGET[2]: N/A

BIDDING[3]: N/A

EXHIBIT(S) ATTACHED:

1. **Memo – Fire Chief Keith MacIsaac (August 22, 2016)**
2. **Resolution**
3. **Letter – Assistant Principal Steven May, WHS (June 1, 2016)**
4. **Contract – Melrose Pyrotechnics, Inc./WHS (May 5, 2016)**
5. **Certificate of Insurance (June 1, 2016)**

RECOMMENDATION: Approval

SUBMITTED FOR BOARD CONSIDERATION: VILLAGE MANAGER

---

[1] *The purpose of the proposed item and a description of same. If the issue is site specific, such as an annexation or road improvement, a map must be attached to the memorandum.*
[2] *If applicable, provide all budgetary considerations as follows: is the item covered in the current budget; fund(s) the item is to be charged to; expenses per fund(s) and total cost; and necessary transfer(s) or supplemental appropriation(s).*
[3] *If applicable, describe the bidding process and results for purchases and contracts. If applicable, state whether or not any particular city, state or federal program was considered*

Go To Regular Agenda

Memo

To: Jon Sfondilis, Village Manager

From: Keith MacIsaac, Fire Chief

CC: David Palmeri, Deputy Fire Chief

Fire Prevention Bureau

File – Wheeling High School

Date: August 22, 2016

Re: Homecoming Fireworks Display @ Wheeling High School; Wavier of Bond Requirement

---

Wheeling High School has requested permission to conduct a public fireworks display as part of their annual "Homecoming Celebration" on Friday, October 7, 2016. I have reviewed their request and have been assured that all of the operating conditions required by the Village of Wheeling will be met. Attached is a request from Wheeling High School to waive the $5,000.00 bond required by the Village of Wheeling Municipal Code for a public fireworks display. The code allows the Village Board to waive the bond, as long as the overall intent of the bond is reasonably assured. In the past, the Village Board has waived the bond for Wheeling High School when a public fireworks display was included as part of their homecoming celebrations. This has been occurring for more than ten (10) years. Since the fireworks display will be contained completely on Wheeling High School property, they are using the same fireworks contractor that is routinely used by the Village of Wheeling (Melrose Pyrotechnics, Inc.) and there have been no known problems with previous displays, I am recommending that the Village Board waive the bond requirement.

As a point of information, two & a half (2 ½) inch diameter shells are planned to be used as part of this display; much like in the past. These shells are substantially smaller in diameter than those traditionally launched during the Village of Wheeling's July 4th display. A secured area with a minimum diameter of 350 feet is required by the International Fire Prevention Code in order to safely launch two and a half (2½) inch diameter shells. The baseball diamond area directly south of the football stadium will be used for the display. This area was previously measured and found to be 593 feet (North-South) by 440 feet (East-West). There is sufficient space to safely conduct this display. In addition to the ambulance standby for the football game, an engine company will be assigned to standby during the actual fireworks display. The fireworks will be launched during half-time at approximately 8:30 pm. Prior notification of the residents directly west of the launch site will be made by Wheeling High School prior to October 7, 2016.

If this meets with your approval, I have attached the necessary resolution authorizing the fireworks display and waiving the required $5,000.00 bond for review and approval by the Village Board.

Go To Regular Agenda

RESOLUTION NUMBER _____

RESOLUTION AUTHORIZING A PUBLIC FIREWORKS DISPLAY BY WHEELING HIGH SCHOOL ON OCTOBER 7, 2016 AND WAIVING THE REQUIRED $5,000.00 SECURITY BOND

WHEREAS, Ordinance 2706 allows for qualified social organizations to conduct public fireworks displays and to request a waiver of the required $5,000.00 security bond for conducting said public fireworks displays; and

WHEREAS, Wheeling High School has requested formal approval to conduct a public fireworks display as part of their "Homecoming Celebration" on Friday, October 7, 2016; and

WHEREAS, Wheeling High School has also requested a formal waiver of the required $5,000.00 bond; and

WHEREAS, compliance with all applicable Village of Wheeling code requirements have been met.

NOW, THEREFORE, BE IT RESOLVED BY THE PRESIDENT AND BOARD OF TRUSTEES OF THE VILLAGE OF WHEELING, COUNTIES OF COOK AND LAKE, STATE OF ILLINOIS, that said public fireworks display at Wheeling High School is hereby approved and the bond requirement of Ordinance 2706 is hereby waived.

Trustee _____ moved, seconded by Trustee _____ that Resolution Number _____ be adopted.

President Argiris _____

Trustee Brady	_____	Trustee Papantos	_____
Trustee Krueger	_____	Trustee Vito	_____
Trustee Lang	_____	Trustee Vogel	_____

ADOPTED this 6th day of September 2016 by the Village President and Board of Trustees of the Village of Wheeling, Illinois.

_____
Dean Argiris, Village President

ATTEST:

_____
Elaine E. Simpson, Village Clerk

Go To Regular Agenda

Wheeling H.S. Athletics and Activities
"Home of the Wildcats"

Steve May, A.P.S.A. (718-7018) Beth Anderson, Athletic Assistant (718-7020)

June 1, 2016

Ron Antor
Fire Prevention Bureau
2 Community Blvd.
Wheeling, IL 60090

Dear Ron:

I am writing to request a permit for Wheeling High School's annual homecoming fireworks show on Friday, October 7. The fireworks show will take place at halftime of our football game. As in years past, Melrose Pyrotechnics will be putting on the show. Melrose Pyrotechnics is located at P.O. Box 302, Kingsbury, Indiana 46345. Our contact person is Wynn Cramer and he can be reached at 219-393-5522. They will provide a certificate of insurance for the show. The owner/occupant of Wheeling H.S. is Township High School District 214. Their address is 2121 S. Goebbert Rd. Arl. Hts., IL 60005.

Once again I would like to request that the Wheeling Village Board waive the $5,000.000 bond required for a firework display.

I would like to thank you for the support you have shown Wheeling High School. Our staff, students, and the community really enjoy our fireworks show, and without your support we would not be able to do this great event.

If you have any questions please give me a call at 847-718-7018,

Sincerely,

Steve May
Assistant Principal for Student Activities
Wheeling High School

Go To Regular Agenda

MELROSE PYROTECHNICS, INC.

AGREEMENT

This contract entered into this **5th** Day of **May** AD **2016** by and between MELROSE PYROTECHNICS, INC. of Kingsbury, Indiana and **Wheeling High School** (CUSTOMER) of City **Wheeling** State **IL**.

WITNESSETH: Melrose Pyrotechnics, Inc. for and in consideration of the terms hereinafter mentioned, agrees to furnish to the Customer **One (1)** Fireworks Display(s) as per agreement made and accepted and made a part hereof, including the services of our Operator to take charge of and fire display under the supervision and direction of the Customer, said display to be given on the evening of **October 7, 2016** Customer Initial _____, weather permitting, it being understood that should inclement weather prevent the giving of this display on the date mentioned herein the parties shall agree to a mutually convenient alternate date, within six (6) months of the original display date. If the show is rescheduled prior to our truck leaving the facility, Customer shall remit to Melrose Pyrotechnics, Inc. an additional 15% of the total contract price for additional expenses in presenting the display on an alternate date. If the show is rescheduled after our trucks leave the facility, Customer shall remit to Melrose Pyrotechnics, Inc. an additional 40% of the total contract price for additional expenses incurred. The determination to cancel the show because of inclement or unsafe weather conditions shall rest within the sole discretion of Melrose Pyrotechnics, Inc. In the event the Customer does not choose to reschedule another date or cannot agree to a mutually convenient date, Melrose Pyrotechnics, Inc. shall be entitled to 50% of the contract price for costs, damages and expenses. If the fireworks exhibition is canceled by Customer prior to the display, Customer shall be responsible for and shall pay to Melrose Pyrotechnics, Inc. on demand, all Melrose Pyrotechnics Inc.'s out of pocket expenses incurred in preparation for the show including, but not limited to, material purchases, preparation and design costs, deposits, licenses and employee charges.

MELROSE PYROTECHNICS, INC. agrees to furnish all necessary fireworks display materials and personnel for a fireworks display in accordance with the program approved by the parties. Quantities and varieties of products in the program are approximate. After final design, exact specifications will be supplied upon request. Should this display require any Union related costs; their fees are not included in this agreement.

It is further agreed and understood that the CUSTOMER is to pay MELROSE PYROTECHNICS, INC. the sum of **Four Thousand Dollars and 00/100 ($4,000.00)**. A service fee of 1 ½ % per month shall be added, if account is not paid within 30 days of the show date.

MELROSE PYROTECHNICS, INC. will obtain Public Liability and Property Damage and Workers Compensation Insurance. All those entities/individuals who are listed on the certificate of insurance will be deemed an additional insured on our liability policy.

CUSTOMER will provide the following items:

(a) Sufficient area for the display, including a minimum spectator set back of **350** feet at all points from the discharge area.
(b) Protection of the display area by roping-off or similar facility.
(c) Adequate police protection to prevent spectators from entering display area.
(d) Search of the fallout area at first light following a nighttime display.

It is further agreed and mutually understood that nothing in this contract shall be construed or interpreted to mean a partnership, both parties being hereto responsible for their separate and individual debts and obligations and neither party shall be responsible for any agreements not stipulated in this contract. Customer agrees to pay any and all collection costs, including reasonable attorney's fees and court costs incurred by Melrose Pyrotechnics, Inc. in the collection or attempted collections of any amount due under this agreement and invoice.

The parties hereto do mutually and severally guarantee terms, conditions, and payments of this contract, these articles to be binding upon the parties, themselves, their heirs, executors, administrators, successors and assigns.

MELROSE PYROTECHNICS, INC.

By Wynn Cramer

Date Signed: **May 5, 2016**

Wynn Cramer - Event Producer
P.O. Box 302, 1 Kingsbury Industrial Park
Kingsbury, IN 46345
(800) 771-7976
wynn@melrosepyro.com

CUSTOMER

By S.T. May
Its duly authorized agent, who represents he/she has full authority to bind the customer.

Date Signed 6-1-16

(PLEASE TYPE OR PRINT)

Name Steve May
Address 900 S. Elmhurst
Wheeling IL 60090
Phone 847-718-7018
Email steve.may@d214.org

Regular Agenda

Wheeling high School
900 S. Elmhurst Road Wheeling, IL

2 ½ inch Max Shell / No Angles
Wynn Cramer 8/31/2016

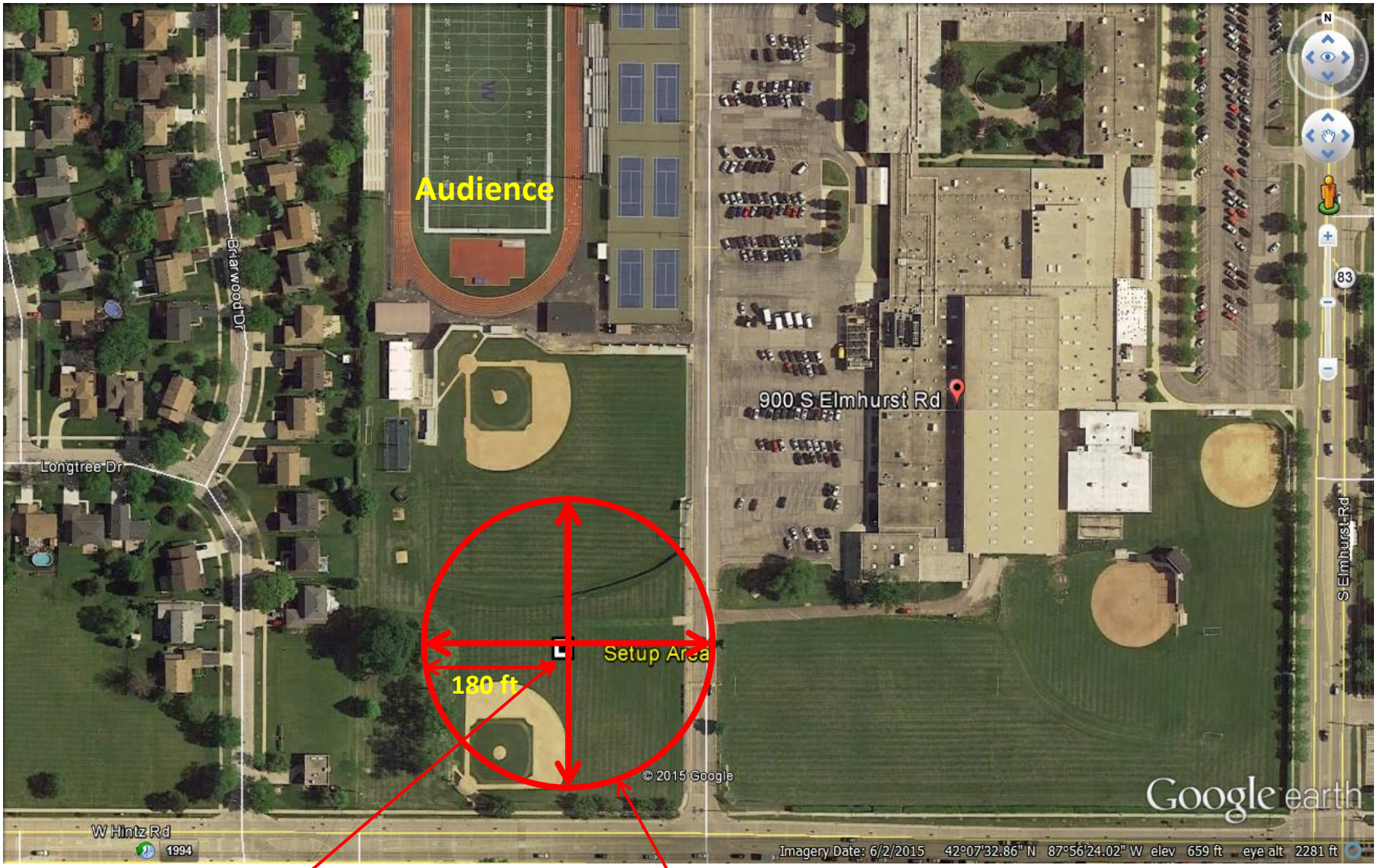

Launch Location: **Setup Area: 30’x30’** **Site Radius: 180 ft From Setup area.**

Go To Regular Agenda

CERTIFICATE OF LIABILITY INSURANCE

DATE (MM/DD/YYYY) 6/1/2016

THIS CERTIFICATE IS ISSUED AS A MATTER OF INFORMATION ONLY AND CONFERS NO RIGHTS UPON THE CERTIFICATE HOLDER. THIS CERTIFICATE DOES NOT AFFIRMATIVELY OR NEGATIVELY AMEND, EXTEND OR ALTER THE COVERAGE AFFORDED BY THE POLICIES BELOW. THIS CERTIFICATE OF INSURANCE DOES NOT CONSTITUTE A CONTRACT BETWEEN THE ISSUING INSURER(S), AUTHORIZED REPRESENTATIVE OR PRODUCER, AND THE CERTIFICATE HOLDER.

IMPORTANT: If the certificate holder is an ADDITIONAL INSURED, the policy(ies) must be endorsed. If SUBROGATION IS WAIVED, subject to the terms and conditions of the policy, certain policies may require an endorsement. A statement on this certificate does not confer rights to the certificate holder in lieu of such endorsement(s).

PRODUCER

Britton Gallagher
One Cleveland Center, Floor 30
1375 East 9th Street
Cleveland OH 44114

CONTACT NAME:
PHONE (A/C, No, Ext): 216-658-7100
FAX (A/C, No): 216-658-7101
E-MAIL ADDRESS:

INSURER(S) AFFORDING COVERAGE	NAIC #
INSURER A : Everest National Insurance Company	10120
INSURER B : LM Ins Corp	
INSURER C : Everest Indemnity Insurance Co.	10851
INSURER D : Maxum Indemnity Company	26743
INSURER E :	
INSURER F :	

INSURED

Melrose Pyrotechnics, Inc.
Kingsbury Industrial Parkway
Heinold Complex
Kingsbury IN 46345

COVERAGES **CERTIFICATE NUMBER:** 355612032 **REVISION NUMBER:**

THIS IS TO CERTIFY THAT THE POLICIES OF INSURANCE LISTED BELOW HAVE BEEN ISSUED TO THE INSURED NAMED ABOVE FOR THE POLICY PERIOD INDICATED. NOTWITHSTANDING ANY REQUIREMENT, TERM OR CONDITION OF ANY CONTRACT OR OTHER DOCUMENT WITH RESPECT TO WHICH THIS CERTIFICATE MAY BE ISSUED OR MAY PERTAIN, THE INSURANCE AFFORDED BY THE POLICIES DESCRIBED HEREIN IS SUBJECT TO ALL THE TERMS, EXCLUSIONS AND CONDITIONS OF SUCH POLICIES. LIMITS SHOWN MAY HAVE BEEN REDUCED BY PAID CLAIMS.

INSR LTR	TYPE OF INSURANCE	ADDL INSR	SUBR WVD	POLICY NUMBER	POLICY EFF (MM/DD/YYYY)	POLICY EXP (MM/DD/YYYY)	LIMITS	
C	**GENERAL LIABILITY**			SI8ML00042-161	1/15/2016	1/15/2017	EACH OCCURRENCE	$1,000,000
	X COMMERCIAL GENERAL LIABILITY						DAMAGE TO RENTED PREMISES (Ea occurrence)	$500,000
	CLAIMS-MADE X OCCUR						MED EXP (Any one person)	$
							PERSONAL & ADV INJURY	$1,000,000
							GENERAL AGGREGATE	$2,000,000
	GEN'L AGGREGATE LIMIT APPLIES PER:						PRODUCTS - COMP/OP AGG	$2,000,000
	POLICY X PRO-JECT LOC							$
A	**AUTOMOBILE LIABILITY**			SI8CA00025-161	1/15/2016	1/15/2017	COMBINED SINGLE LIMIT (Ea accident)	$1,000,000
	X ANY AUTO						BODILY INJURY (Per person)	$
	ALL OWNED AUTOS / SCHEDULED AUTOS						BODILY INJURY (Per accident)	$
	X HIRED AUTOS / X NON-OWNED AUTOS						PROPERTY DAMAGE (Per accident)	$
								$
D	**UMBRELLA LIAB** X OCCUR			EXC6017975	1/15/2016	1/15/2017	EACH OCCURRENCE	$4,000,000
	X **EXCESS LIAB** CLAIMS-MADE						AGGREGATE	$4,000,000
	DED RETENTION $							$
B	**WORKERS COMPENSATION AND EMPLOYERS' LIABILITY** Y / N	N / A		WC734S381029 (IL)	4/4/2016	4/4/2017	X WC STATU-TORY LIMITS / OTH-ER	USL&H Included
	ANY PROPRIETOR/PARTNER/EXECUTIVE OFFICER/MEMBER EXCLUDED? **(Mandatory in NH)** If yes, describe under DESCRIPTION OF OPERATIONS below						E.L. EACH ACCIDENT	$1,000,000
							E.L. DISEASE - EA EMPLOYEE	$1,000,000
							E.L. DISEASE - POLICY LIMIT	$1,000,000

DESCRIPTION OF OPERATIONS / LOCATIONS / VEHICLES (Attach ACORD 101, Additional Remarks Schedule, if more space is required)

Additional Insured extension of coverage is provided by above referenced General Liability policy where required by written agreement.
DISPLAY DATE: October 7, 2016
LOCATION: Wheeling High School - Wheeling, Illinois
ADDITIONAL INSURED: Township High School District 214, Wheeling High School; Village of Wheeling; Wheeling Fire Department

CERTIFICATE HOLDER

Township High School District 214
2121 S. Goebbert Rd.
Arlington Heights IL 60005

CANCELLATION

SHOULD ANY OF THE ABOVE DESCRIBED POLICIES BE CANCELLED BEFORE THE EXPIRATION DATE THEREOF, NOTICE WILL BE DELIVERED IN ACCORDANCE WITH THE POLICY PROVISIONS.

AUTHORIZED REPRESENTATIVE

© 1988-2010 ACORD CORPORATION. All rights reserved.

Go To Regular Agenda

Village of Wheeling
Fire Prevention Bureau
2 Community Boulevard
Wheeling, Illinois 60090
Voice (847) 459-2669
Facsimile (847) 215-5209

PERMIT APPLICATION

AUTOMATIC SPRINKLER SYSTEM ☐ FIRE PUMP ☐ ENGINEERED FIRE SUPPRESSION SYSTEM ☐
FIRE ALARM ☐ HOOD AND DUCT FIRE SUPPRESSION SYSTEM ☐ OPEN CONTROLLED BURN ☐
OTHER ☒ Fireworks

LOCATION OF INSTALLATION: Wheeling High School SUITE NO: _____
PERMANENT INDEX NUMBER (PIN): _____
OWNER/OCCUPANT: Wheeling High School PHONE: _____
ADDRESS: 900 S. Elmhurst Rd.
Wheeling IL 60090
GENERAL CONTRACTOR: Melrose Pyrotechnics PHONE: _____
INSTALLATION CONTRACTOR: Melrose Pyrotechnics
ADDRESS: P.O. Box 302
Kingsbury, IN 46345
CONTACT PERSON: Wynn Cramer PHONE: 219-393-5520
STATE LICENSE NUMBER: IL 06-OPF-0030
CONSTRUCTION COST: $ _____

SIGNATURE OF APPLICANT: S.Y.M. DATE: 6-1-16

For Office Use Only

FEES

SPRINKLER SYSTEM: $ _____
FIRE PUMP: $ _____
FIRE ALARM: $ _____
ENGINEERED SYSTEM: $ _____
HOOD & DUCT SYSTEM: $ _____
OPEN BURN: $ _____
OTHER: $ _____

TOTAL: $

Application Received

PERMIT APPROVED BY: _____ DATE: _____
Fire Offical

PERMIT NUMBER: _____ ISSUED: _____

THE ISSUANCE OF A PERMIT OR APPROVAL OF DRAWINGS SHALL NOT BE CONSTRUED TO BE A PERMIT FOR, OR AN APPROVAL TO CAUSE, A VIOLATION OF THE BUILDING CODE OF THE VILLAGE OF WHEELING.

WHITE – FIRE PREVENTION BUREAU YELLOW – APPLICANT *Revised: April 2009*

Go To Regular Agenda

VILLAGE OF WHEELING
LEGISLATIVE COVER MEMORANDUM

AGENDA ITEM NO(S): 11.C
(To be inserted by Deputy Clerk)

DATE OF BOARD MEETING:	September 6, 2016
TITLE OF ITEM SUBMITTED:	A Resolution Granting Final Acceptance of Public Improvements within the Millbrook Pointe Subdivision
SUBMITTED BY:	Mark Janeck, Director of Public Works
BASIC DESCRIPTION OF ITEM[1]:	Final Acceptance of Public Improvements (water distribution and sanitary sewer systems) within the Millbrook Pointe Subdivision.
BUDGET[2]:	N/A
BIDDING[3]:	N/A
EXHIBIT(S) ATTACHED:	Memorandum, Resolution, Location Map
RECOMMENDATION:	Approval
SUBMITTED FOR BOARD CONSIDERATION:	Village Manager

[1] *The purpose of the proposed item and a description of same. If the issue is site specific, such as an annexation or road improvement, a map must be attached to the memorandum.*
[2] *If applicable, provide all budgetary considerations as follows: is the item covered in the current budget; fund(s) the item is to be charged to; expenses per fund(s) and total cost; and necessary transfer(s) or supplemental appropriation(s).*
[3] *If applicable, describe the bidding process and results for purchases and contracts. If applicable, state whether or not any particular city, state or federal program was considered*

Go To Regular Agenda

VILLAGE OF WHEELING ILLINOIS

MEMORANDUM

TO: Jon A. Sfondilis, Village Manager

FROM: Mark Janeck, Director of Public Works

DATE: August 31, 2016

SUBJECT: Millbrook Pointe Subdivision
Final Acceptance of Public Improvements

EXECUTIVE SUMMARY

Approval of Final Acceptance concerning the public improvements installed for the Millbrook Pointe Subdivision development.

The Millbrook Pointe townhome project was part of an industrial land redevelopment that broke ground in 2008. The project was affected by the economic recession that impacted many areas of metropolitan Chicago and benefited from certain tax incremental funds provided by the Village in order to assist completion. The developer has been able to sell all of the townhome units and proper maintenance has been observed. On April 10th, 2015, the President and Board of Trustees approved the Tentative Acceptance for the public improvements installed at the Millbrook Pointe Subdivision, through Resolution No. 15-45. This 4.3 acre townhome development site is located just east of the intersection of Wolf Road and Meyerson Way.

The Millbrook Pointe Homeowners Association going forward will be responsible for all maintenance of the storm water management facility, storm sewer system, curb and gutter, pavement, sidewalks, street lighting, traffic control signing and parkway trees and landscaping located on the property. The Village will be responsible for the maintenance of the sanitary sewer and water distribution systems only. The maintenance of the individual service connections for water and sewer shall also be the responsibility of the Homeowners Association.

The public improvements have been satisfactorily constructed and were inspected and approved by Public Works personnel on August 24, 2016. Final Acceptance and the release of the maintenance bond guarantee in the amount of $68,730.97 are being recommended at this time in accordance with Village code.

The resolution granting Final Acceptance of the public improvements is provided for the Village Board's consideration.

Go To Regular Agenda

RESOLUTION NO. 16 -_____

A RESOLUTION GRANTING FINAL ACCEPTANCE OF PUBLIC IMPROVEMENTS WITHIN THE MILLBROOK POINTE SUBDIVISION

WHEREAS, on December 1, 2008, the President and the Board of Trustees approved the final plat for the Millbrook Pointe Subdivision; and

WHEREAS, on April 10, 2015, the President and the Board of Trustees approved the tentative acceptance for the Millbrook Pointe Subdivision; and

WHEREAS, required surety was posted with the Village for public and private improvements, i.e. sanitary sewer system, stormwater management areas, storm sewer system, water distribution system, curb and gutter, pavement, sidewalks, street lighting, traffic control signing, parkway trees and landscaping; and

WHEREAS, The Homeowners Association shall be responsible for the stormwater management facility, storm sewer system, service connections for water and sewer, curb & gutter, pavement, sidewalks, street lighting, traffic control signing, parkway trees and landscaping, and the Village shall maintain the sanitary sewer and water mains only; and

WHEREAS, the installation of these improvements has been completed and the Village has conducted an on-site inspection and determined that the above mentioned public and private improvements have been satisfactorily installed under the provisions of the Wheeling Municipal Code;

NOW, THEREFORE, BE IT RESOLVED by the president and Board of Trustees of the Village of Wheeling, Counties of Cook and Lake, state of Illinois, that final acceptance of said public and private improvements, consisting of sanitary sewer system, stormwater management areas, storm sewer system, water distribution system, curb and gutter, pavement, sidewalks, street lighting, traffic control signing, parkway trees and landscaping within the Millbrook Pointe Subdivision, Wheeling, Illinois is hereby granted and that the existing bond in the amount $68,730.97 be released as with the Final Acceptance is approved by the Village Board.

Trustee _____ moved, seconded by Trustee _____,
that Resolution No. 16 -_____ be passed.

Trustee Brady _____ Trustee Lang _____

Trustee Papantos_____ Trustee Vogel _____

Trustee Krueger _____ Trustee Vito _____

Village President Argiris_____

Go To Regular Agenda

APPROVED THIS _____ day of _____, 2016.

_____
Dean S. Argiris
Village President

ATTEST:

_____
Elaine E. Simpson
Village Clerk

Go To Regular Agenda

LOCATION MAP

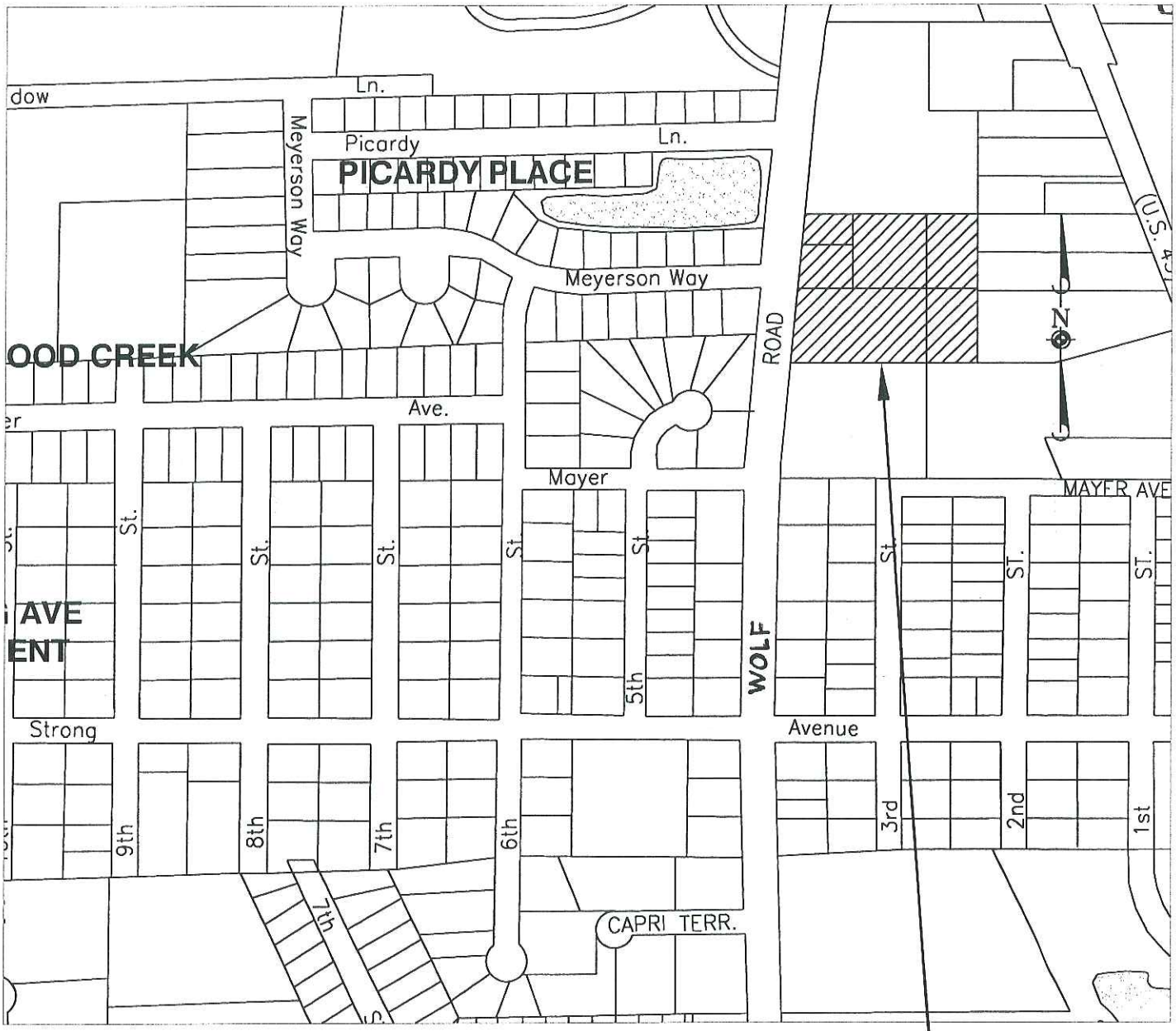

SUBJECT SITE

Go To Regular Agenda

VILLAGE OF WHEELING
LEGISLATIVE COVER MEMORANDUM

AGENDA ITEM NO(S): 11.D
(To be inserted by Deputy Clerk)

DATE OF BOARD MEETING:	September 6, 2016
TITLE OF ITEM SUBMITTED:	Resolution authorizing and directing the Village President to enter into a contract with Liturgical Publications, Inc. to provide printing services for the Village of Wheeling Newsletter.
SUBMITTED BY:	Jon A. Sfondilis, Village Manager
BASIC DESCRIPTION OF ITEM[1]:	Three-year contract to continue providing printing service for the Village newsletter by including 2.5 pages of advertising. Liturgical Publications, Inc. will continue to sell the advertisements, which eliminates the cost to the Village for printing the newsletter.
BUDGET[2]:	Prior to selling ad space, the annual cost for printing an eight-page newsletter was $25,940. Liturgical Publications, Inc. will sell 2.5 pages of advertisements within a twelve-page newsletter at no cost to the Village. This will result in a continued annual savings to the Village of $25,940.
EXHIBIT(S) ATTACHED:	Memo, Resolution, Contract
RECOMMENDATION:	Approval
SUBMITTED FOR BOARD APPROVAL:	VILLAGE MANAGER

[1] The purpose of the proposed item and a description of same. If the issue is site specific, such as an annexation or road improvement, a map must be attached to the memorandum.
[2] If applicable, provide all budgetary considerations as follows: is the item covered in the current budget, fund(s), the item is to be changed to, expenses per fund(s) and total cost, and necessary transfer(s) or supplemental appropriation(s).

Go To Regular Agenda

VILLAGE OF WHEELING ILLINOIS

MEMORANDUM

TO: Village President, Clerk and Board of Trustees

FROM: Jon A. Sfondilis, Village Manager

DATE: August 30, 2016

SUBJECT: Village newsletter contract renewal

EXECUTIVE SUMMARY

The contract for printing of the Village's newsletter is due for renewal with Liturgical Publications. The agreement remains that the service is provided at ***no cost*** to the Village, and thereby creates a savings of nearly $26,000 annually.

The existing two-year agreement for printing services of the Village's newsletter is due for renewal. Since 2013, the Village has worked cooperatively and effectively with Liturgical Publications to provide the residents and businesses of the community with a quality bi-monthly newsletter. The program established at the onset of the agreement calls for all printing and related expenses to be covered solely by the vendor through an ad sales campaign.

For the reasons of service satisfaction and cost savings, I recommend renewal of the contract with a three-year term. If for any reason the Village wanted to cancel this contract, all that is needed is a 90-day written notice.

Please contact me with any questions.

Go To Regular Agenda

RESOLUTION NO. 16 - ____

RESOLUTION AUTHORIZING AND DIRECTING THE VILLAGE MANAGER TO ENTER INTO A CONTRACT WITH LITURGICAL PUBLICATIONS, INC. TO PROVIDE PRINTING SERVICES FOR THE VILLAGE OF WHEELING NEWSLETTER

WHEREAS, the Village of Wheeling, Lake and Cook Counties, Illinois, is a home rule community, pursuant to Article VII, Section 6 of the Illinois Constitution of 1970; and

WHEREAS, the Board of Trustees of the Village of Wheeling has identified sustaining and maintaining service levels as a priority, and has directed Village staff to investigate options for funding Village publications through advertising in those publications; and

WHEREAS, the Village of Wheeling has reviewed the terms set forth in the contract between Liturgical Publications, Inc. and the Village of Wheeling, and believes them to be reasonable and beneficial to the Village; and

WHEREAS, the Village of Wheeling believes the inclusion of advertising in the Newsletter will benefit Wheeling residents and businesses by eliminating the cost for printing the Newsletter, and would be in the best interests of the Village of Wheeling and its residents;

NOW, THEREFORE, BE IT RESOLVED BY THE PRESIDENT AND BOARD OF TRUSTEES OF THE VILLAGE OF WHEELING, COUNTIES OF COOK AND LAKE, STATE OF ILLINOIS, that the Village President is hereby authorized and directed to enter into a contract with Liturgical Publications, Inc. for the provision of printing services for the Village Newsletter.

Trustee _____moved, seconded by Trustee _____

that Resolution No. **16 -** _____be adopted.

President Argiris _____ Trustee Papantos _____

Trustee Krueger _____ Trustee Vito _____

Trustee Brady _____ Trustee Lang _____

Trustee Vogel _____

Adopted this _____ day of _____, 2016 by the President and Board of Trustees of the Village of Wheeling, Illinois.

_____
Dean S. Argiris
Village President

ATTEST:

_____
Elaine E. Simpson
Village Clerk

Go To Regular Agenda

PUBLISHING SERVICE AGREEMENT

This Agreement is made this 6th day of September, 2016 by and between Liturgical Publications Inc (Publisher) and Village of Wheeling, Wheeling, IL (Customer). The parties agree that the Customer will use Publisher's services exclusively for publication of its Newsletter (referred to herein as Publication or Newsletter) and shall provide copy on a timely basis. In consideration for Publisher providing a complete and continuous publishing service, the Customer agrees to distribute the Publication to its members as set forth in this Agreement and hereby assigns to Publisher, all its rights to any advertising revenue from the Publication, as set forth in this Agreement. Every attempt will be made to deliver the Publication in a timely manner, however, the customer acknowledges that the Publisher cannot be held responsible for delivery exceptions due to weather emergencies, strikes, natural disasters, or acts of God.

I. TERM: This agreement shall commence immediately and shall continue in effect for 3 consecutive Publication Years (each publication year consisting of 06 publications), with the first publication year to begin on the 01 day of January, 2017. The term of this Agreement shall include the initial Publication Year(s) and any subsequent renewal(s)(collectively the "Agreement Term").

II. SERVICES: Publisher shall provide to Customer all benefits outlined in the Agreement.
Absent the existence of factors beyond the control of either party (including without limitation due to acts of God, natural disasters, war or the failure of Internet service providers, other vendors, or shipping carriers and without such party's fault or negligence), Publisher shall deliver the Publication to Customer within 10 business days after receiving copy from the Customer. Publications received after 2pm CST may take an additional day.

A. Publisher shall provide the following publication(s)/services:

5 issues of a(n) 12 page (8.5x11) Newsletter consisting of 9.5 page(s) of content and 2.5 pages of sponsorship (Full page of ads on pages 6 & 7 and a half page of ads on the bottom of page 12.), collate and staple. Publisher shall be responsible for the preparation of the Newsletters for mailing through Eagle Printing. Quantity published will be 17,350 copies per publication. Newsletter will consist of the following: Cover Sheet: Digital 11x17 4/4. Sheet 2: Digital 11x17 4/4. Sheet 3: Digital 11x17 4/4.

1 issue of a(n) 16 page (8.5x11) newsletter consisting of 13.5 page(s) of content and 2.5 pages of sponsorship (Full pages on pages 6 & 7 and half page on bottom of page 16), collate, and staple. Quantity published will be 17,350 copies per publication. Newsletter will consist of the following: cover sheet: offset 11x17 4/4, Sheet 2: Offset 11x17 4/4. Sheet 3: Offset 11x17 4/4. Sheet 4: Offset 11x17 4/4.

Publisher will provide 1 hardcover bound book(s) of Customer's annual publications. Volume identification embossed in gold lettering. Customer agrees to set aside 1 copy of each issue to be submitted at the end of the year for binding.

B. Royalties:

For the duration of this Agreement Publisher will pay the Customer a profit sharing royalty in an amount equal to 30% of paid advertising revenue in excess of $28,200 per publication year. The amount of $28,200 will increase by 1% each subsequent publication year.

III. VALUE ADDED SERVICES: Provide at no additional cost.

A. Customer will have unlimited access to Publisher's LPI Express publication transmission software.

B. Art & Media Portal, http://portal.4lpi.com, (a $480/yr value) – our source for content and artwork to help you produce a better publication.

Go To Regular Agenda

C. OurSeniorCenter (http://ourseniorcenter.com) - Your publication's presence on the Internet that includes the last twelve issues of your publication online.

IV. AGREEMENT: The contents of this document, including attached exhibits and/or subsequent renewal Agreements, extensions, or revisions constitutes the entire Agreement regarding the subject matter contained herein between Publisher and the Customer. The parties understand and agree to be bound by its terms and conditions. This Agreement shall bind the parties, their successors and assigns. This Agreement is not intended to supersede or modify other agreements.

Customer agrees to provide Publisher a copy of their vendor list only for solicitation of advertising for the Publication. Publisher agrees to maintain confidentiality of these lists and only use them for contracted services between Publisher and the Customer. Customer also agrees to make available a telephone, Internet connection (if available), and work space for the Publisher's representative during scheduled sponsorship campaign(s).

V. RENEWAL: Publisher and Customer agree that at any date prior to the expiration of this Agreement, this Agreement may be renewed or revised on terms then mutually agreeable to both parties, such a period and under such terms as are identical to those contained in this Agreement.

Prior to replacing the service provided by the Publisher, the Customer agrees to give the Publisher the opportunity to match or exceed any other publisher's offer before entering into an agreement with them. This opportunity to match or exceed another publisher's offer does not bind or restrict the Customer's right to use another publisher.

VI. MODIFICATIONS: The Customer has the option to cancel this Agreement by giving the Publisher a 90 day notice in writing. Publisher agrees to solicit advertisers for the Newsletter within the guidelines established by the Village of Wheeling Board of Trustees and that the advertisers will have their businesses located in the Village of Wheeling. Further the Customer has final approval of the ads. The Publisher agrees to prepare the Newsletters for mailing and will deliver one box of Newsletters to the Customer and shall deliver all remaining Newsletters to the Wheeling Post Office no later than 10 business days after receiving the copy of the Newsletter from the Customer.

Village of Wheeling	Liturgical Publications Inc
2 Community Blvd Wheeling, IL 60090 (847) 459-2600	2875 South James Drive New Berlin, WI 53151 (800) 950-9952

By:_____ Date_____ _____
Jim Trudgeon

369372_1

Go To Regular Agenda

VILLAGE OF WHEELING
LEGISLATIVE COVER MEMORANDUM

AGENDA ITEM NO (S): 13.A
(To be inserted by Deputy Clerk)

DATE OF BOARD MEETING:	September 6, 2016
TITLE OF ITEM SUBMITTED:	Resolution granting a permit to Illinois State Knights of Columbus Charities, Inc., for the date of September 17 & 18, 2016.
SUBMITTED BY:	Andrew Jennings Director of Community Development
BASIC DESCRIPTION OF ITEM:	Request to conduct a Tag Day Event by Illinois State Knights of Columbus Charities, Inc., on September 17 & 18, 2016.
BUDGET[1]:	N/A
BIDDING[2]:	N/A
EXHIBIT (S) ATTACHED:	Memo, Resolution, Application for Tag Day Event Permit
RECOMMENDATION:	Approval

[1] *If applicable, provide all budgetary considerations as follows: is the item covered in the current budget; fund(s) the item is to be charged to; expenses per fund(s) and total cost; and necessary transfer(s) or supplemental appropriation(s).*
[2] *If applicable, describe the bidding process and results for purchases and contracts. If applicable, state whether or not any particular city, state or federal program was considered*

Go To Regular Agenda

VILLAGE OF WHEELING ILLINOIS

MEMORANDUM

TO: **Jon A. Sfondilis, Village Manager**

FROM: **Andrew Jennings, Director of Community Development**

DATE: **August 22, 2016**

SUBJECT: **Approval of Tag Days for Illinois State Knights of Columbus**

EXECUTIVE SUMMARY

Staff recommends approval of the attached Tag Day Application from Illinois State Knights of Columbus Charities, Inc. for a Tag Day event September 17 & 18, 2016. The Village Board generally approves Tag Day events for established non-for-profit organizations whose sole purpose is to generate revenue for charitable purposes.

Illinois State Knights of Columbus Charities, Inc. has submitted their application and supplemental documents to conduct a Tag Day in Wheeling pursuant to Chapter 4.64 of the Wheeling Municipal Code, which allows an organization to conduct a Tag Day for no more than two days within Wheeling.

The above not-for-profit organization has been in existence for 57 years and has participated in yearly Tag Day events within our community for many years. The Village last approved their Tag Day event on September 8, 2015.

If you should have any further questions or concerns, please let me know.

ACJ/EM

Go To Regular Agenda

RESOLUTION NO. 16 - _____

RESOLUTION GRANTING A TAG DAY PERMIT TO ILLINOIS STATE KNIGHTS OF COLUMBUS CHARITIES, INC. TO CONDUCT A TAG DAY EVENT ON SEPTEMBER 17 & 18, 2016

WHEREAS, the Wheeling Municipal Code, Chapter 4.64, “Tag Days" requires that organizations secure a permit to conduct a Tag Day within the Village of Wheeling. Permits shall be limited to no more than one per calendar year for each charitable organization; and

WHEREAS, Illinois State Knights of Columbus Charities, Inc. has made proper application for a permit to conduct a Tag Day Event on September 17 & 18, 2016.

NOW, THEREFORE, BE IT RESOLVED BY THE PRESIDENT AND BOARD OF TRUSTEES OF THE VILLAGE OF WHEELING, COUNTIES OF COOK AND LAKE, **STATE OF ILLINOIS**, that Illinois State Knights of Columbus Charities, Inc. be granted a permit to conduct a Tag Day Event in the Village of Wheeling, weather permitting on September 17 & 18, 2016 contingent upon receipt of permission from the property owners to solicit on private property.

Trustee _____ moved, seconded by Trustee _____, that

Resolution No. 1**6 -** _____ be adopted.

President Argiris _____ Trustee Vito _____

Trustee Krueger _____ Trustee Lang _____

Trustee Brady _____ Trustee Papantos _____

Trustee Vogel_____

APPROVED this, _____day of _____ 2016 by the President and Board of Trustees of the Village of Wheeling, Illinois

ATTEST

_____
Dean S. Argiris, Village President

_____
Elaine E. Simpson, Village Clerk

RECEIVED

AUG 22 2016

Village of Wheeling
Community Development

VILLAGE OF WHEELING
COMMUNITY DEVELOPMENT

Go To Regular Agenda

COMMUNITY DEVELOPMENT
(847) 459-2620 (fax) 847-459-2656

TAG DAY APPLICATION

DATE: August 18, 2016

1) **Name of Organization** Illinois State Council Knights of Columbus Charities Inc (Regina Council 4837)

2) **Address** 181 W Dundee **Street** Wheeling **City**
IL **State** 60090 **Zip Code** 847.537.2740 **Phone Number**

3) **Mailing Address (if different)** _____ **Street**
_____ **City** _____ **State** _____ **Zip Code**

4) **The purpose for which the organization is legally established**
Faith based men's group providing aid to people with intellectual disabilities

5) **How long has organization been in existence?** 57 yrs

6) **Number of members** 95

7) **Names, address & drivers license numbers of solicitors (use back of sheet)**

8) **List of organization's officers (attach list)**

9) **Tag Day Manager:** John J Heydt **Name** [redacted] **Address**
Palatine **City** IL **State** 60074 **Zip Code** [redacted] **Phone Number**

10) **Proposed date of Tag Day** September 17th + 18th 2016

11) **Location of Taggers including intersections**
Lexington + Lake Cook, Milwaukee + Dundee

PLEASE NOTE:

All organizations are to comply with Chapter 4.64 of the Wheeling Municipal Code regarding solicitation on public highways.

Solicitors on public highways shall wear reflective type vest during such time that solicitation occurs on or near a public highway.

Go To Regular Agenda

Permission must be obtained from property owner to tag on private property, i.e. parking lots, shopping centers, etc.

12) A. Attach copy of registration statement filed with the States Attorney General pursuant to 225.ILCS 460/2 of the Illinois Revised Statutes, if required.

B. If exempt, state exemption section

13) State Board, Group, or Individual having final discretion as to the distribution of the contributions received (Attached documentation)

14) Attach Copy of Not-for-Profit Certification

15) Attach copy of permission from property owner to tag on private property

ATTESTATION

The undersigned attest that the above named organization is organized not-for-profit under the law of the State of Illinois and has been continuously in existence for at least 5 years preceding date of this application, and that during this entire 5 year period preceding date of an application it has maintained a bona fide membership actively engaged in carrying out its objectives. The undersigned do hereby state under penalties of perjury that all statements in the foregoing application are true and correct; that the officers, and operators of the Tag Day are bona fide members of the sponsoring organization and are all good moral character and have not been convicted of a felony; that if a permit is granted hereunder, the undersigned will be responsible for the conduct of the Tag Day in accordance with the provisions of the laws of the State of Illinois and this jurisdiction governing the conduct of such Tag Days."

Knights of Columbus Regina Council

Name of Organization

John J Heydt John J Heydt

President/Chairperson **Signature**

Village Manager **Signature**

Go To Regular A

OFFICE OF THE ATTORNEY GENERAL
STATE OF ILLINOIS

April 13, 2016

Lisa Madigan
ATTORNEY GENERAL

ILLINOIS STATE COUNCIL K. OF C.
CHARITIES INC
PO BOX 681
KANKAKEE, IL 60901

RE: RE: Status of ILLINOIS STATE COUNCIL K. OF C. CHARITIES INC under the Illinois Charitable Laws
CO# 01008755

Dear Registrant:

This letter is pursuant to your request that the Attorney General confirm the status of ILLINOIS STATE COUNCIL K. OF C. CHARITIES INC under the Charitable Organization Laws.

This organization is currently registered with the Attorney General's Charitable Trust and Solicitations Bureau as CO# 01008755. It is current in the filing of its financial reports, having filed its report for the period ended June 30, 2015. Please let us know if you require further information.

Sincerely,

Tariyah Martin Barnes, Compliance Officer
Charitable Trusts Bureau
100 West Randolph Street, 11th Floor
Chicago, Illinois 60601
Telephone: (312) 814-2595

Go To Regular A

STATE OF ILLINOIS

EXECUTIVE DEPARTMENT

Proclamation

WHEREAS, *an intellectual disability is defined as a disorder caused by cerebral palsy, epilepsy, autism, or any other condition which results in impairment of, or lack of, normal development of intellectual capacities; and,*

WHEREAS, *intellectual disabilities originate before the age of 18, and generally continue indefinitely; and,*

WHEREAS, *approximately 1.5 percent of the U.S. population is afflicted with an intellectual disability; and,*

WHEREAS, *due to the early onset and debilitating nature of these disorders, many more children are affected than adults; and,*

WHEREAS, *one of the main purposes of the Knights of Columbus, a fraternal order with 1.8 million members around the world, is to support various charitable causes that seek to make our families and communities stronger; and,*

WHEREAS, *the Knights of Columbus has donated more than $1.3 billion, and volunteered over 640 million hours of service in the past decade; and,*

WHEREAS, *the Illinois State Council of the Knights of Columbus will hold their 47th Annual Fund Drive on September 16-18, 2016, to benefit programs that serve individuals with intellectual disabilities, distributing proceeds to more than 1,200 service organizations throughout Illinois;*

THEREFORE, *I, Bruce Rauner, Governor of the State of Illinois, do hereby proclaim September 16 - 18, 2016, as* ***HELPING CITIZENS WITH INTELLECTUAL DISABILITIES DAYS*** *in Illinois, in support of the worthy efforts of the Illinois State Council of the Knights of Columbus, and encourage all citizens to assist those who are affected by intellectual disabilities.*

In Witness Whereof, *I have hereunto set my hand and caused the Great Seal of the State of Illinois to be affixed.*

Done at the Capitol in the City of Springfield, this THIRD *day of* JUNE*, in the Year of Our Lord, two thousand and* SIXTEEN*, and of the State of Illinois, one hundred and* NINETY-EIGHTH*.*

Jesse White

SECRETARY OF STATE

Bruce Rauner

GOVERNOR

Go To Regular Agenda

VILLAGE OF WHEELING
LEGISLATIVE COVER MEMORANDUM

AGENDA ITEM NO(S): 13.B
(To be inserted by Deputy Clerk)

DATE OF BOARD MEETING: September 6, 2016

TITLE OF ITEM SUBMITTED: A Resolution Authorizing the Village President and Clerk to Renew the Food Service Contract with Hoffman House Catering for the Wheeling Pavilion Senior Center Lunch at Pavilion Congregate Dining Program and Approve and Execute a First Amendment to the Food Service Contract with Hoffman House Catering for the Wheeling Pavilion Senior Center Lunch at Pavilion Congregate Dining Program

SUBMITTED BY: Shari Matthews Huizar,
Director of Human Services

BASIC DESCRIPTION OF ITEM[1]: Contract to provide meals for the Village's Lunch at Pavilion Congregate Dining Program at the Wheeling Pavilion Senior Center, with grant funding provided through AgeOptions. The contract sets forth nutritional guidelines, delivery, food preparation protocols, specifies price per unit and menu submission timelines. The first amendment extends the contract from October 1, 2016-September 30, 2017.

BUDGET[2]: The funds used to pay for the food service are comprised of contracted reimbursement from AgeOptions through the Older Americans Act Title III C-1 grant funding as well as contributions received from program participants. The Village of Wheeling will pay $4.20(Regular)/$4.56(Deli) per meal served.

EXHIBIT(S) ATTACHED: Food Service Contract

RECOMMENDATION: Approve

SUBMITTED FOR BOARD APPROVAL: VILLAGE MANAGER

---

[1] The purpose of the proposed item and a description of same. If the issue is site specific, such as an annexation or road improvement, a map must be attached to the memorandum.
[2] If applicable, provide all budgetary considerations as follows: is the item covered in the current budget, fund(s), the item is to be changed to, expenses per fund(s) and total cost, and necessary transfer(s) or supplemental appropriation(s).

Go To Regular Agenda

VILLAGE OF WHEELING ILLINOIS

MEMORANDUM

TO: Jon A. Sfondilis, Village Manager

FROM: Shari Matthews Huizar, Director of Human Services

DATE: September 6, 2016

SUBJECT: Renewal and execution of a Food Service Contract for the Wheeling Pavilion Senior Center Congregate Dining Program with Hoffman House Catering.

EXECUTIVE SUMMARY

Staff requests renewal of the food service contract with Hoffman House Catering for the Wheeling Pavilion Senior Center Lunch at Pavilion Congregate Dining program and the approval and execution of the first amendment to the food service contract with Hoffman House Catering for the Wheeling Pavilion Senior Center Lunch at Pavilion Congregate Dining program.

In 2015, the Village participated in the competitive bidding process facilitated by AgeOptions for catering services for congregate dining programs throughout the northwest suburban Cook county area, including the Wheeling Pavilion Senior Center Lunch at Pavilion Congregate Dining Program. The results of this process produced the winning bid from Hoffman House Catering of Batavia, Illinois to provide services to the Northwest Suburban region.

A first amendment to the contract for catering services is now needed to extend the original contract through September 30, 2017, with options to renew following the grant period. This contract year, Hoffman House will offer standard congregate meals at $4.20 per meal up from $4.09, and deli selection meals twice weekly at $4.56 per meal, up from $4.44.

The Congregate Dining Lunch at Pavilion program is funded with federal grant funds through AgeOptions under the Older American Act on a three- to four-year cycle. The Village has been awarded the grant in the amount of approximately $42,815 for this grant year; legislation to accept this grant will be presented to the Village Board at the September 19, 2016 regular meeting. This catering contract is contingent on the award and acceptance of the grant funding through AgeOptions.

The Lunch at Pavilion Congregate Dining Program utilizes funds provided through the annual grant as well as the contributions of participants in the program. The Lunch at Pavilion budget conservatively estimates receipt of an average donation of $2.00 per meal served. Historically the program actually received approximately $3.00 per meal.

The Village of Wheeling has been a recipient of the Older Americans Act Title III-C1 Congregate Dining funding since 2009. The program has grown during the past seven years from serving an average of 15 meals three times a week in 2009 to the current service level of 25-30 meals per day five days per week.

Go To Regular Agenda

RESOLUTION 16- _____

A RESOLUTION AUTHORIZING THE VILLAGE PRESIDENT AND CLERK TO RENEW THE FOOD SERVICE CONTRACT WITH HOFFMAN HOUSE CATERING FOR THE WHEELING PAVILION SENIOR CENTER LUNCH AT PAVILION CONGREGATE DINING PROGRAM AND APPROVE AND EXECUTE A FIRST AMENDMENT TO THE FOOD SERVICE CONTRACT WITH HOFFMAN HOUSE CATERING FOR THE WHEELING PAVILION SENIOR CENTER LUNCH AT PAVILION CONGREGATE DINING PROGRAM

WHEREAS, the Village of Wheeling, Lake and Cook Counties, Illinois (the "Village") is a home rule unit of local government pursuant to Article VII, Section 6 of the Illinois Constitution of 1970; and

WHEREAS, on October 6, 2015, the Board of Trustees accepted and executed a grant agreement for the provision of congregate meals at the Wheeling Pavilion Center for the time period of October 1, 2015 through September 30, 2016; and

WHEREAS, the Caterer has requested an increase in prices comparable to the increase in the Consumer Price Index pursuant to Section 15 of the Food Services Agreement; and

WHEREAS, the Village provides meals at the Wheeling Pavilion Senior Center on Veteran's Day and the Agreement currently lists Veteran's Day a holiday exempt from delivery;

WHEREAS, the Village has determined that it is in the best interests of its residents to renew the Food Services Agreement with Hoffman House Catering for the provision of congregate meals at the Wheeling Pavilion Senior Center for an additional twelve month term through September 30, 2017; and

WHEREAS, the Village has determined that it is in the best interest of its residents to amend its contract with Hoffman House to provide meals on Veteran's Day and to increase the meal prices to remain consistent with the Consumer Price Index increases; and

NOW, THEREFORE BE IT RESOLVED by the President and Board of Trustees for the Village of Wheeling, Cook and Lake Counties, Illinois, as follows:

SECTION 1: Each Whereas paragraph above is incorporated by reference into this Section 1 and made a part hereof as material and operative provisions of this Resolution.

SECTION 2: That under the authority vested in the corporate authorities of the Village of Wheeling, through the statutes of the State of Illinois, the President and Board of Trustees of the Village of Wheeling find that it is in the best interests of the Village to

Go To Regular Agenda

renew the Food Services Contract with Hoffman House Catering for an additional twelve month term through September 30, 2017.

SECTION 3: That under the authority vested in the corporate authorities of the Village of Wheeling, through the statutes of the State of Illinois, the President and Board of Trustees of the Village of Wheeling find that it is in the best interests of the Village to approve the First Amendment to the Food Services Contract with Hoffman House Catering, a copy of which is attached hereto as EXHIBIT A.

Trustee _____moved, seconded by Trustee _____

that Resolution No. **16 -** _____be adopted.

President Argiris	_____	Trustee Papantos	_____
Trustee Brady	_____	Trustee Krueger	_____
Trustee Vito	_____	Trustee Lang	_____
		Trustee Vogel	_____

Adopted this _____ day of September, 2016 by the President and Board of Trustees of the Village of Wheeling, Illinois, pursuant to a roll call vote as set forth above.

_____
Dean S. Argiris
Village President

ATTEST:

_____
Elaine E. Simpson
Village Clerk

Go To Regular Agenda

EXHIBIT "A"

FIRST AMENDMENT TO VILLAGE OF WHEELING SENIOR SERVICES FOOD SERVICE CONTRACT

Go To Regular Agenda

FIRST AMENDMENT TO VILLAGE OF WHEELING DEPARTMENT OF HUMAN SERVICES SENIOR SERVICES DIVISION/WHEELING PAVILION SENIOR CENTER FOOD SERVICE AGREEMENT

THIS FIRST AMENDMENT TO FOOD SERVICE AGREEMENT (this **"First Amendment"**) is made and entered into this September ____, 2016, by and between **VILLAGE OF WHEELING** ("Village" or the "Provider") and **HOFFMAN HOUSE** ("Caterer")

RECITALS

WHEREAS, the Provider and Caterer entered into the Food Service Agreement on October 1, 2015 regarding the provision of catering services through the Village's Senior Services Lunch Program; and

WHEREAS, the Provider has entered into contracts with AgeOptions, the designated Area Agency on Aging for Suburban Cook County, to provide nutrition services for participants eligible under Title IIIC of the Older Americans Act, subject to approval of the Area Plan by the Department on Aging of the State of Illinois and the availability of funds, and the Caterer provides services in connection with these contracts with AgeOptions; and

WHEREAS, the Caterer received a grant under Title IIIC of the Older Americans Act of 1965 for the provision of congregate meals at the Wheeling Pavilion Center for the time period of October 1, 2015 through September 30, 2016 and is expected to receive a grant under Title IIIC of the Older Americans Act of 1965 for the provision of congregate meals at the Wheeling Pavilion Center for the time period of October 1, 2016 through September 30, 2017; and

WHEREAS, the Caterer and Provider have agreed to extend the terms of the Food Services Agreement for an additional twelve months through September 30, 2017; and

WHEREAS, the Caterer has requested an increase in prices comparable to the increase in the CPI pursuant to Section 15 of the Food Services Agreement; and

WHEREAS, the Village provides meals at the Wheeling Pavilion Senior Center on Veteran's Day;

NOW, THEREFORE, in consideration of the mutual covenants and conditions hereinafter set forth, and other good and valuable consideration, the receipt and sufficiency of which are hereby acknowledged, Provider and Caterer agree as follows:

SECTION 1: The foregoing Recitals are hereby incorporated herein.

SECTION 2: Section 3 entitled "Service" is hereby amended to read in its entirety as follows:

Go To Regular Agenda

SERVICE.

Starting October 1, 2015, the Caterer will deliver up to forty-five (45) meals per day, Monday through Friday (with the exception of the eight (8) holidays below), to the Wheeling Pavilion Senior Center located at 199 N. First Street, Wheeling, IL 60090. If a holiday is a Monday, Tuesday, Wednesday, Thursday or Friday, the Caterer shall have no obligation to deliver meals for that day. However, the Village shall be able to request special meals on holidays and the Caterer shall attempt to accommodate all said requests.

The holidays excepted from the delivery requirements are as follows:

New Year's Day
President's Day
Memorial Day
Independence Day
Labor Day
Thanksgiving Day and the Friday following Thanksgiving
Christmas Day

Within the number of annual meals specified in the Agreement, the Caterer will deliver daily the specified number of daily meals and supplies as ordered by the Village. The Caterer shall not require the Village to order a minimum number of meals for any serving day. The Village shall order meals one (1) week prior to the next serving. However, the Village reserves the right to change the number of meals as late as the day prior to the date of delivery. The Village will not be held financially liable for order changes made within agreed time frames. The Caterer shall demonstrate the capability to maintain the meal service program to provide the average number of meals per day, with daily fluctuations from minus 50% to plus 100%.

The total number of meals provided by the Caterer shall not exceed the total number of meals set forth in the Provider's budget, subject to adjustments determined by the Provider and AgeOptions. AgeOptions and the Provider shall have the option to cancel the Agreement contingent upon funding from the federal and state governments for the program. AgeOptions must receive sufficient funds from the Illinois Department on Aging to meet the total obligations for the period October 1, 2015 to September 30, 2017. In addition, there must not be any administrative, legislative order, judicial order, rule or law which requires a change in this or related decision made by AgeOptions.

Go To Regular Agenda

The Caterer assures the Village that in the event of a vehicle breakdown or other contingencies, the Caterer must be able to dispatch replacement trucks to assure delivery of meals that may be stranded en route within one half (1/2) hour past regular delivery time. Should the main preparation plant become inoperative, alternative sources of supply must be available at the cost of the Caterer. The Caterer further states it shall make adequate personnel available at all times to meet its obligations under this Agreement, including adequate supervisory staff in the preparation of food.

SECTION 3: Pursuant to Section 15 entitled "Pricing," Section 15, Subsection (a) "Price per Meal" is amended to read in its entirety as follows:

a. Price per Meal:
Congregate Meal: $4.20 (four dollars and twenty cents) per meal.

Deli Buffet: $4.56 (four dollars and fifty six cents) per meal

The undersigned proposed, in accordance with the terms of the Agreement to furnish and deliver for the Village Senior Services Lunch at Pavilion Congregate Dining Program, freshly prepared meals in the quantities and to the designation designated for the period starting October 1, 2016 and extending to September 30, 2017, all in accordance with this Agreement, and for the prices set above.

SECTION 4: That all terms and portions contained in the original Food Services Agreement between the Provider and Caterer not expressly modified by this First Amendment shall remain valid and in full force and effect.

IN WITNESS WHEREOF, the Village of Wheeling, pursuant to authority granted by the adoption of a Resolution by its Board of Trustees, has caused this FIRST AMENDMENT to the Food Services Contract to be executed by its Village President and attested by the Village Clerk on the respective dates set forth below

Go To Regular Agenda

VILLAGE OF WHEELING

_____

Dean S. Argiris, Village President

ATTEST:

_____

Elaine E. Simpson

Village Clerk

Dated:_____

HOFFMAN HOUSE CATERING

_____

Jim Smigo

ATTEST:

_____

Name:_____

Secretary

Dated:_____

Go To Regular Agenda

VILLAGE OF WHEELING
LEGISLATIVE COVER MEMORANDUM

AGENDA ITEM NO(S): 13.C
(To be inserted by Deputy Clerk)

DATE OF BOARD MEETING: September 6, 2016

TITLE OF ITEM SUBMITTED: Resolution Authorizing the Village Manager to Execute Change Order No. 1 to the Contract with Manhard Consulting For Engineering Services For Wolf Court Diversionary Channel Crossing And Roadway

SUBMITTED BY: Mark Janeck, Director of Public Works

BASIC DESCRIPTION OF ITEM[1]: Resolution accepting a not-to-exceed $6,240.00 proposal to add additional tasks to the original scope of work for the piping/enclosing of approximately 500 feet of diversionary channel from Manhard Consulting for the Concept Plan, Preliminary Permitting, Budgetary Construction Cost Estimate and Preliminary Land Plan

BUDGET[2]: Included in the 2016 TIF Fund budget

BIDDING[3]: Not required for professional services.

EXHIBIT(S) ATTACHED: Memo, Resolution, Proposal

RECOMMENDATION: Approval

SUBMITTED FOR BOARD CONSIDERATION: Village Manager

---

[1] *The purpose of the proposed item and a description of same. If the issue is site specific, such as an annexation or road improvement, a map must be attached to the memorandum.*

[2] *If applicable, provide all budgetary considerations as follows: is the item covered in the current budget; fund(s) the item is to be charged to; expenses per fund(s) and total cost; and necessary transfer(s) or supplemental appropriation(s).*

[3] *If applicable, describe the bidding process and results for purchases and contracts. If applicable, state whether or not any particular city, state or federal program was considered*

Go To Regular Agenda

VILLAGE OF WHEELING ILLINOIS

MEMORANDUM

TO: Jon Sfondilis, Village Manager

FROM: Mark Janeck, Director of Public Works

DATE: August 31, 2016

SUBJECT: Change Order for additional Civil Engineering Services specific to a vehicle and pedestrian crossing over the Diversionary Channel at Wolf Court.

EXECUTIVE SUMMARY

Additional civil engineering services to evaluate an alternative that encloses approximately 500 linear feet of the Diversionary Channel from Milwaukee Ave south to the proposed crossing. The proposed engineering services is in an amount not-to-exceed $6,240.

The Village of Wheeling received five (5) responses after a request for proposal (RFP) was issued in February 2015 for the design, document preparation, and permitting required for construction of a vehicular and pedestrian access to and from Wolf Court and the vacant 17 acres south of Lake Cook Road and west and north of the Diversionary Channel. Manhard Engineering was determined to be the lowest priced, qualified firm that submitted a proposal. Resolution 16-52 awarded a $120,262 design contract to Manhard Engineering. This Change Order would increase that Contract by $6,240 for a total contract of $126,502.

The construction of the proposed vehicular and pedestrian crossing is necessary for the development of the subject 17 acre parcel site due to the extremely limited access options for the parcel. Currently there is one (1) permitted, regulated access to the property—a right-in, right-out access point located on the vehicular 'off' ramp from eastbound Lake Cook Road to Milwaukee Avenue. Such limited access is almost certainly not sufficient to attract a large, quality, mixed-use development, a land use that typically requires two to three access points. The existing access would also be insufficient for safe and adequate emergency response. The proposed Diversionary Channel crossing would allow traffic to use the right-in, right-out RAM restaurant easement access to and from Milwaukee Avenue, as well as full vehicular access from Wolf Court.

The attached proposal for additional engineering services analyzes the feasibility of enclosing 500 linear feet of the Diversionary Channel, a section that extends from Milwaukee Avenue to a

Go To Regular Agenda

location approximately 100 feet south of the proposed channel crossing. Public Works staff has been reviewing the proposed bridge crossing design as well as the existing public property surrounding the crossing, and are of the opinion that enclosure of the Channel could be in the best interest of the Village and a future development. Currently the crossing is concept designed using pre-cast concrete culvert structures; the proposed enclosure would extend these culvert structures approximately 100 linear feet south of the crossing, and 400 linear feet north of the proposed crossing, and then fill in above to create new land area. The proposed enclosure, if feasible from monetary and engineering perspectives, would substantially increase useable acreage in the area for uses such as parking, aesthetics, or recreation. Staff has estimated that the useable land area size resulting from the proposed enclosure at more than one acre.

With your concurrence, please include this item on the September 6, 2016 Board meeting agenda.

Go To Regular Agenda

RESOLUTION NO. 16 - _____

RESOLUTION AUTHORIZING THE VILLAGE MANAGER TO EXECUTE CHANGE ORDER NO. 1 TO THE CONTRACT WITH MANHARD CONSULTING FOR ENGINEERING SERVICES CONCERNING THE WOLF COURT DIVERSIONARY CHANNEL CROSSING AND ROADWAY

WHEREAS, the vacant 17 acre parcel south of Lake Cook Road, and west and north of the Diversionary Channel has been the subject of a previous Annexation Agreement and various potential development plans; and

WHEREAS, the proposed crossing and roadway is generally recognized as a necessity for proper development of the site due to the existing limited vehicular access options for the parcel; and

WHEREAS, Resolution No. 16-52 awarded an engineering services contract to Manhard Consulting for the design, document preparation, and permitting required for the construction of a proposed vehicular and pedestrian access over the Diversionary Channel; and

WHEREAS, additional engineering services are necessary to analyze the monetary and environmental feasibility of enclosing a portion of the Diversionary Channel from Milwaukee Avenue to approximately 100 feet south of the proposed channel crossing, a project that would provide additional useable acreage for development; and

WHEREAS, it is determined to be in the best interest of the Village of Wheeling to accept the attached Change Order concerning additional engineering services from Manhard Consulting for the Wolf Court Diversionary Channel Crossing and Roadway in the amount not-to-exceed $6,240.00;

NOW, THEREFORE, BE IT RESOLVED BY THE PRESIDENT AND BOARD OF TRUSTEES OF THE VILLAGE OF WHEELING, COUNTIES OF COOK AND LAKE, STATE OF ILLINOIS, that the Village Manager is authorized to approve Change Order No. 1 in the amount of $6,240.00 as attached hereto.

Trustee _____ moved, seconded by

Trustee_____ that Resolution No. 16 - ____ be adopted.

President Argiris _____

Trustee Brady _____ Trustee Krueger_____

Trustee Vito _____ Trustee Lang _____

Trustee Papantos _____ Trustee Vogel _____

Go To Regular Agenda

ADOPTED this _____ day of _____, 2016, by the President and Board of Trustees of the Village of Wheeling, Illinois.

_____
Dean S. Argiris, Village President

ATTEST:

_____
Elaine E. Simpson, Village Clerk

Manhard CONSULTING

Civil Engineering
Surveying
Water Resources Management
Water & Wastewater Engineering
Supply Chain Logistics
Construction Management
Environmental Sciences
Landscape Architecture
Land Planning

August 3, 2016

Mr. Jon Tack, P.E.
Village Engineer
Village of Wheeling
2 Community Boulevard
Wheeling, Illinois 60090

RE: PROPOSAL FOR ADDITIONAL CIVIL ENGINEERING SERVICES
WOLF COURT DIVERSIONARY CHANNEL CROSSING AND ROADWAY

Dear Jon:

Per your request, we offer to perform the following additional services:

	Time and Material (Not-to-Exceed)	Client to Initial Services Approved to Proceed
Concept Plan		
Explore the feasibility to enclose the Diversionary Channel from Milwaukee Avenue to approximately 100 feet south of the proposed channel crossing to provide additional useable acreage for ground surface development. If determined to be feasible, prepare a Concept Plan for the proposed alternative.	$2,680.00	JS
Preliminary Permitting Coordination		
Research and identify local, state, and federal permitting requirements to enclose the Diversionary Channel from Milwaukee Avenue to approximately 100 feet south of the proposed channel crossing.	$1,620.00	JS
Budgetary Construction Cost Estimate		
Prepare an estimate of cost to construct the selected structure determined most feasible to enclose the Diversionary Channel	$500.00	JS
Preliminary Land Plan		
Prepare a preliminary land plan showing potential use of the additional usable acreage created by enclosing the Diversionary Channel. The preliminary plan will show either parking facilities or recreational park facilities as directed by the Village Engineer.	$1,440.00	JS

Manhard Consulting
900 Woodlands Parkway • Vernon Hills, Illinois 60061
tel: (847) 634-5550 • fax: (847) 634-0095 • www.manhard.com
ARIZONA • CALIFORNIA • COLORADO • ILLINOIS • INDIANA • NEVADA

This work is an amendment to the "Village of Wheeling – Wolf Court Diversionary Channel Crossing and Roadway Contract Document" (Agreement) dated May 2, 2016 with respect to providing additional services. We offer to complete these services for the additional fees as shown above to the original time and material not-to-exceed budget in accordance with the terms and conditions (including the General Terms and Conditions) of the Agreement. Please provide acknowledgment of these additional services by signing below and returning one copy to our office. We will begin work as soon as we receive an executed copy.

If you should have any questions, please do not hesitate to contact me.

Very truly yours,
MANHARD CONSULTING, LTD.

Peter Stoehr, P.E.
Senior Project Manager

ACCEPTED: **VILLAGE OF WHEELING**

By: _____
(Authorized Representative)

Jon A. Sfondilis
(Printed Name)

Title: Village Manager

Date: _____

Go To Regular Agenda

VILLAGE OF WHEELING
LEGISLATIVE COVER MEMORANDUM

AGENDA ITEM NO(S): 13.D
(To be inserted by Deputy Clerk)

DATE OF BOARD MEETING:	September 6, 2016
TITLE OF ITEM SUBMITTED:	Resolution Accepting a Bid and Approving a Contract with Midwest Brickpaving for the 2016 Brick Paver Maintenance (Resetting) Project
SUBMITTED BY:	Mark Janeck, Director of Public Works
BASIC DESCRIPTION OF ITEM[1]:	A resolution seeking approval of an $110,000.10 contract with Midwest Brickpaving for resetting and replacing damaged and settled brick pavers throughout the Village.
BUDGET[2]:	Full funding is available in the Capital Improvement Projects fund.
BIDDING[3]:	August 23, 2016 two bids were received and opened.
EXHIBIT(S) ATTACHED:	Memo, Resolution, Bid Tab.
RECOMMENDATION:	Approval
SUBMITTED FOR BOARD CONSIDERATION:	VILLAGE MANAGER

[1] *The purpose of the proposed item and a description of same. If the issue is site specific, such as an annexation or road improvement, a map must be attached to the memorandum.*
[2] *If applicable, provide all budgetary considerations as follows: is the item covered in the current budget; fund(s) the item is to be charged to; expenses per fund(s) and total cost; and necessary transfer(s) or supplemental appropriation(s).*
[3] *If applicable, describe the bidding process and results for purchases and contracts. If applicable, state whether or not any particular city, state or federal program was considered*

Go To Regular Agenda

VILLAGE OF WHEELING ILLINOIS

MEMORANDUM

TO: Jon A. Sfondilis, Village Manager

FROM: Mark Janeck, Director of Public Works

DATE: August 31, 2016

SUBJECT: 2016 Brick Paver Maintenance (Resetting)

EXECUTIVE SUMMARY

Staff recommends Board approval of an $110,000.10 contract with Midwest Brickpaving of Antioch for the 2016 brick paver maintenance project.

The Village has substantial areas that contain paver bricks, generally located along the length of Milwaukee Avenue and within public park areas. These paver bricks require maintenance from time to time, including application of exterior sealant and resetting of the pavers within the existing sand base. The intention of this particular resetting contract is to look for areas in need of resetting that are used frequently by the public, and then to spread out from there, due to the limited amount of square foot area allowed by the contract. On August 9th, 2016, The Village advertised a public bid in the Daily Herald for brick paver maintenance work to reset and repair areas throughout the Village that have differential settling and could be a trip hazard.

Two (2) bids were received and read on Tuesday, August 23, 2016. Village staff reviewed the bids received, and Midwest Brickpaving of Antioch, IL was determined to be the lowest cost, qualified, and responsible bidder meeting all contract requirements with a $14.00 per square foot bid proposal. Total square footage to be reset as a result of this contract is approximately 7,857 square feet with a total contract amount of $110,000.10. Midwest Brickpaving has previously performed satisfactory brick paver work in the Village.

FY 2016 Capital Improvement funds in the amount of $110,000 have been allocated for this maintenance contract.

With your concurrence, please include this item on the September 6, 2016 Board meeting agenda.

Go To Regular Agenda

RESOLUTION NO. 16-_____

RESOLUTION ACCEPTING A BID AND APPROVING A CONTRACT WITH MIDWEST BRICKPAVING FOR THE 2016 BRICK PAVER MAINTENANCE (RESETTING) PROJECT

WHEREAS, the Village's 2016 Budget has Capital Project Funds allocated for the proposed improvements; and

WHEREAS, the Village advertised for bids on August 9, 2016 in the Daily Herald for sealed bids for the proposed brick paver maintenance; and

WHEREAS, on August 23, 2016 the Village received and opened two (2) qualified bid proposals for this project; and

WHEREAS, Village staff reviewed the two (2) bid proposals and Midwest Brickpaving of Antioch, Illinois, was determined to be the lowest qualified and responsible bidder meeting all contract requirements; and

WHEREAS, it is determined to be in the best interest of the Village of Wheeling to accept the bid of Midwest Brickpaving for the 2016 Brick Paver Maintenance Project;

NOW, THEREFORE, BE IT RESOLVED by the President and the Board of Trustees of the Village of Wheeling, Counties of Cook and Lake, State of Illinois, that a $110,000.10 contract for the 2016 Brick Paver Maintenance Project be approved and awarded to Midwest Brickpaving of Antioch, Illinois, in accordance with the unit prices in their August 23, 2016 bid proposal as attached hereto.

Trustee _____ moved, seconded by Trustee _____,

that Resolution No. 16-_____ be passed.

PASSED this _____day of _____, 2016.

President Argiris_____ Trustee Papantos_____

Trustee Brady _____ Trustee Krueger_____

Trustee Vito_____ Trustee Lang _____

Trustee Vogel _____

APPROVED this _____day of _____, 2016.

_____
Dean S. Argiris
Village President

ATTEST:

_____
Elaine E. Simpson
Village Clerk

Go To Regular Agenda

2016 BRICK PAVER MAINTENANCE

Contract

16.1420.06

Go To Regular Agenda

VILLAGE OF WHEELING

2016 BRICK PAVER MAINTENANCE (RESETTING)

CONTRACT DOCUMENT

This agreement is made this 6 day of September, 2016 between and shall be binding upon the Village of Wheeling, an Illinois municipal Corporation hereinafter referred to as (the "Village") and (Midwest Brickpaving, Inc.) hereinafter to as (the "Contractor") and its successors.

Witnessed, that in consideration of the mutual promises of the parties delineated in the contract documents, the Contractor agrees to perform the services and the Village agrees to pay for the following services as set forth in the contract documents:

The Project can generally be described as the maintenance and repair of those areas throughout the Village that have brick paver walks that have differential settling and are a trip hazard.

1. This contract shall embrace and include all of the applicable contract documents listed below as if attached hereto or repeated herein:
    a. Specification and Contract Document for 2016 BRICK PAVER MAINTENANCE (RESETTING) , consisting of the following:
        i. Cover Sheet
        ii. Table of Contents
        iii. Invitation to Bid on Contract Document Legal Notice
        iv. Standard General Conditions of the Construction Contract, EJCDC C-700 2007 Edition (as modified)
        v. Specific Terms, Conditions and Instructions and Blue Prints
        vi. Bid Proposal Form
        vii. Plans and Specifications
        viii. All issued Addenda
        ix. Certificate of Eligibility to Enter into Public Contracts
        x. Required Performance and Payment Bonds
        xi. Required Insurance Certificates
        xii. All other Modifications issued after the execution of the Contract. A Modification is (1) a written amendment to the Contract signed by both parties, (2) a Change Order, (3) a Construction Change Directive or (4) a written order for a minor change in the work issued by the Engineer.
    b. The Contractor's Bid Proposal Dated
    c. Required Performance and Payment Bonds and Certificate of Insurance
2. The Village agrees to pay, and the Contractor agrees to accept as full payment for the items, and installation of the same, which are the subject matter of this contract the total sum of

Go To Regular Agenda

$110,000.10 paid in accordance with the provisions of the Local Government Prompt Payment Act.

3. The Contractor represents and warrants that it will comply will all applicable Federal, State and local laws concerning prevailing wage rates and all Federal, State and local laws concerning equal employment opportunities.

4. The Contractor shall commence work under this Contract upon written Notice to Proceed from the Village and shall complete work on this project within 30 calendar days from the date of the Notice to Proceed. Time is of the essence of this Contract and Contractor agrees to achieve completion within the contract time by all proper and appropriate means including working overtime without additional compensation.

5. Bonds required to guarantee performance and payment for labor and material for this work shall be in a form acceptable to the Village and shall provide that they shall not terminate on completion of the work, but shall be reduced to ten percent (10%) of the contract sum upon the date of final payment by the Village for a period of one (1) year to cover a warranty and maintenance period which Contractor agrees shall apply to all material and workmanship for one (1) year from the date of issuance of the final payment by the Village.

6. Pursuant to the provisions of Section 5 of the Mechanics' Lien Act of Illinois, prior to making any payment on this contract the Village demands that the Contractor furnish a written statement of the names of all parties furnishing labor and/or materials under this Contract and the amounts due or to become due on each. This statement must be made under oath or be verified by affidavit. Final payment shall not be issued by the Village nor shall any retained percentage become due until releases and waivers of lien have been supplied as the Village designates.

7. In executing this Contract, Contractor agrees that it has examined the site of the work and the conditions existing therein, has examined the Contract Documents and taken and compared field measurements and conditions with those Documents.

8. This Contract represents the entire Agreement between the parties and may not be modified without the written approval of both parties.

Go To Regular Agenda

IN WITNESS WHEREOF, the Village of Wheeling, Illinois by, Village President, and the Contractor have hereunto set their hands this _____ day of _____, 2016.

If an individual or partnership, all individual names of each partner shall be signed or if a corporation, an officer duly authorized shall sign here:

Accepted this ___day of _____, 2016.

Individual or Partnership _____ Corporation _____

_____ _____
By Position/Title

_____ _____
By Position/Title

_____
Print Company Name

THE VILLAGE OF WHEELING, ILLINOIS

Accepted this ___day of _____, 2016.

_____
Jon A. Sfondilis
Village Manager

Go To Regular Agenda

BID TABULATION

CIP Project No. 16.1420.06
2016 Brick Paver Maintenance

Date: August 23, 2016 Time: 11:00 AM Location: Board Room		Midwest Brickpaving Antioch, IL	Langton Group Woodstock, IL
No.	Item	Unit Price	Unit Price
1	Standard Brick Paver Reset	$ 14.00	$ 15.90

Go To Regular Agenda

VILLAGE OF WHEELING
LEGISLATIVE COVER MEMORANDUM

AGENDA ITEM NO(S): 13.E
(To be inserted by Deputy Clerk)

DATE OF BOARD MEETING: Tuesday, September 6, 2016

TITLE OF ITEM SUBMITTED: An Ordinance Granting Special Use-Site Plan Approval for a Social Service Facility at 210-212 N. Wolf Road [Docket No. 2016-16].

SUBMITTED BY: Andrew C. Jennings
Director of Community Development

BASIC DESCRIPTION OF ITEM[1]: The petitioner, OMNI Youth Services, is requesting special use-site plan approval to establish a social service facility at a vacant commercial building in the MXC Commercial Residential Zoning District.

BUDGET[2]: N/A
BIDDING[3]: N/A

EXHIBIT(S) ATTACHED:
Ordinance
Staff report
Fire Department memo
Engineering Division memo
Draft PC Findings of Fact and Recommendation
Photos of existing conditions
Project description and response letter
Existing and proposed floor plans
Site plan
Photometric plan
Existing and proposed landscape plans
Bicycle rack specifications
Fencing specifications

RECOMMENDATION: To approve.

SUBMITTED FOR BOARD CONSIDERATION: VILLAGE MANAGER

---

[1] *The purpose of the proposed item and a description of same. If the issue is site specific, such as an annexation or road improvement, a map must be attached to the memorandum.*
[2] *If applicable, provide all budgetary considerations as follows: is the item covered in the current budget; fund(s) the item is to be charged to; expenses per fund(s) and total cost; and necessary transfer(s) or supplemental appropriation(s).*
[3] *If applicable, describe the bidding process and results for purchases and contracts. If applicable, state whether or not any particular city, state or federal program was considered*

Go To Regular Agenda

REQUEST FOR BOARD ACTION

TO: Jon Sfondilis
Village Manager

FROM: Andrew C. Jennings
Director of Community Development

DATE: September 6, 2016

SUBJECT: **Docket No. 2016-16**
OMNI Youth Services
210-212 N. Wolf Road
Special Use-Site Plan Approval for a Social Service Facility

PROJECT OVERVIEW: The petitioner is seeking special use-site plan approval to establish a social service facility at an existing commercial property at 210 N. Wolf Road.

LOCATION MAP:

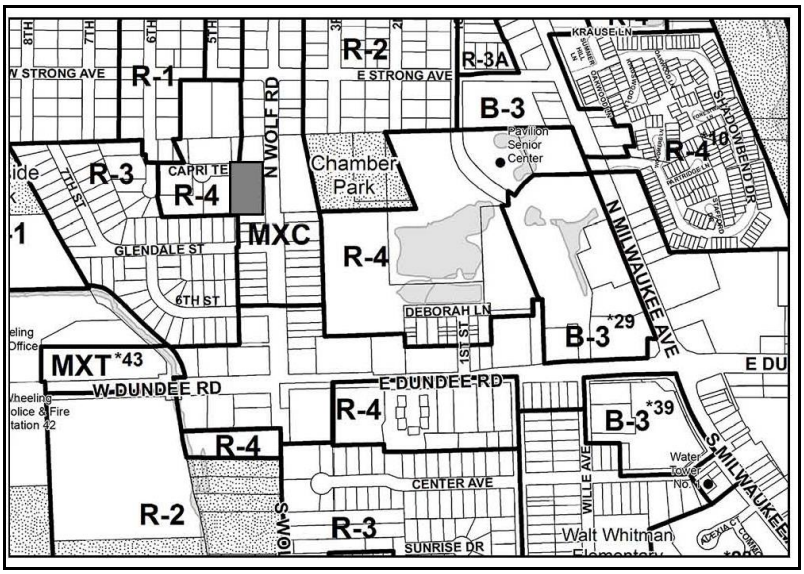

NORTH

PLAN COMMISSION RECOMMENDATION

At the Plan Commission hearing on Thursday, August 25, 2016, Commissioner Powers moved, seconded by Commissioner Johnson to recommend approval of Docket No. 2016-16 to grant Special Use-Site Plan approval under Chapter 19-05 Mixed Use Districts, Chapter 19-10 Use Regulations, and Chapter 19-12 Site Plan Approval Requirements, and associated sections, for a social service facility in accordance with the following exhibits submitted August 15, 2016 (except as noted), by OMNI Youth Services, to be located at 210-212 N. Wolf Road, Wheeling, Illinois.

- Project description (2 sheets), received 6.23.2016;
- Response letter;
- Existing floor plan;
- Proposed floor plans (2 sheets);

Go To Regular Agenda

- Site plan,
- Photometric plan;
- Existing landscape plan;
- Proposed landscape plan;
- Bicycle rack specs (4 sheets) and
- Fence specs (6 sheets).

And with the following condition of approval:

1. The area where the sidewalk is removed shall be sodded.

On the roll call, the vote was as follows:

AYES:	Commissioners Dorband, Issakoo, Johnson, Powers, Ruffatto, Sianis, Zangara
NAYS:	None
ABSENT:	None
PRESENT:	None
ABSTAIN:	None

There being seven affirmative votes, the motion was approved.

GENERAL PROPERTY INFORMATION

Applicant Name:	Jay Meyer, Executive Director
Property Owner:	OMNI Youth Services
Common Property Address:	Located at the northwest corner of Wolf Road and Capri Terrace.
Neighboring Property Land Use(s):	North: Commercial South: Commercial West: Multi-Family Residential East: Institutional / Open Space
Comprehensive Plan Designation:	Commercial Residential Mixed Use
Property size:	24,220 sq. ft. (total lot) 7,740 sq. ft. (building)
Existing Use of Property:	Vacant
Proposed Use of Property:	Social Service Facility
Existing Property Zoning:	MXC Commercial Residential Mixed Use District

Previous Zoning Action on Property:

PC 173	Site plan approval granted by Ordinance No. 2341.
AC 87-9	Architectural, landscaping, and lighting approval.

Go To Regular Agenda

DESCRIPTION OF PROPOSAL

The petitioner is requesting special use approval to establish a social service facility at the existing one-story stand-alone building at 210-212 N. Wolf Road. The proposed facility will offer out-patient counseling, substance abuse and pregnancy prevention, and community resource programs to local youth aged 12 to 18.

The proposed office hours are:

- 9am-9pm Monday through Thursday,
- 9am-4pm Friday, and
- 10am-3pm Saturday.

The proposed maximum capacity (youth, parents, and staff combined) is 26. The proposed average capacity is 12.

No exterior building modifications are proposed.

Minor site work includes some landscaping and fencing. The parking lot will be grinded, repaved, and restriped.

SITE PLAN REVIEW

Scale of Site Plan: 1" = 10' reduced for reproduction.

Proposed General Site Layout: No changes are proposed to the existing site layout. At the July 28th hearing, the plans for the side (south) parking lot were reconfigured to accommodate one-way traffic from west to east. Based upon testimony at the July 28th hearing, the applicant revised the plans. The plan presented at the August 25th hearing proposes no changes to the traffic or parking configuration of the south lot.

Floor Plan: The revised floor plans presented at the August 25th hearing indicate seating and occupancy. There are many small meeting rooms, some larger meeting rooms, a reception, employee areas, offices, storage and toilets.

Total Number of Parking Spaces: The site plan shows that there are 29 parking stalls located on the subject property; 22 stalls are in the rear lot and seven are located in the angled parking on the south side of the building. There is no parking requirement in the parking table of the Zoning Code for social service facility. Therefore, the parking requirement is based upon the operations and is approved by the Plan Commission. The applicant indicates the facility will have a maximum occupancy (clients and staff) of 26 and an average occupancy of 12. It appears that the existing parking is more than adequate for the proposed use.

Bicycle parking: The site plan shows a rack for seven bicycles. The rack is placed at the north end of the rear parking lot, adjacent to the building.

Site Lighting: There are four existing wall-mounted lights for the parking areas. A photometric plan has been provided.

Go To Regular Agenda

Fencing and Trash enclosure: The site plan indicates the existing fence (along the west and north parking areas), trash enclosure (at northwest corner of site) and utilities enclosure (along the rear of the building) will be reconstructed with a six-foot tall stockade-style cedar fence with metal posts. The existing fencing is stained brown. Specifications have been provided regarding the proposed fence style.

Ownership: The subject property is owned by the applicant.

Sidewalks: There is an existing five-foot sidewalk along the Wolf Road and Capri Terrace right-of-ways. There are also walkways on the site that connect from the parking areas to the entry doors. As discussed during the Plan Commission review, a portion of the on-site walkway would be removed to encourage visitors to use the main entrance.

LANDSCAPING PLAN REVIEW

Existing Landscaping: There are existing mature shrubs and trees along the front (east) façade of the building. The dead tree along the east façade of the building will be removed. An existing landscaping plan has been provided.

Proposed Landscape Plan: The landscape plan indicates a small rain garden will be constructed south of the south parking area. All plant species and sizes have been identified. Additional perennial flowers will be added to the yews in front of the building along Wolf Road. New serviceberry trees are proposed for each side of the building entrance on Wolf Road. As discussed during the Plan Commission review, a portion of the on-site walkway would be removed to encourage visitors to use the main entrance. The Plan Commission recommendation includes a condition of approval to clarify that the area will be sodded once the walkway is removed.

Landscape Irrigation: Irrigation is not addressed in the submittal. The new landscaped area—the rain garden—should be not irrigated due to its function.

STANDARDS FOR SPECIAL USE

Following are standards for special use with the petitioner's responses. **(Staff comments are in bold.)**

1. State why the Special Use is necessary for the public convenience at the proposed location. (Explain how the proposed use will benefit residents, the neighborhood or the community at-large.)

   "It is anticipated that the largest concentration of village residents utilizing this facility will come from residences within one square mile of the location. This reflects the geographic demographic of Wheeling residents that most frequently seek our services, and is consistent with our historic counseling and Resource Center service sites that were located in that geographic area from 1990 thru 2015.

   Access in terms of proximity of services to residence, affordability, and the positive identification of an organization as being a part of the community are often important

Go To Regular Agenda

factors/barriers for the families seeking services that are offered by OMNI. Establishing our services in this location should reduce/eliminate travel barriers or hardships, and encourage more families who would benefit from such services to proactivity would seek assistance before the challenges they are encountering become more severe and problematic:

a) Improved/convenient geographic accessibility for Wheeling residents to sliding fee scale subsidized counseling services for adolescents and parents.
b) Services offered in English and Spanish language.
c) Improved/convenient access to after school services for Wheeling middle school students.
d) Improved/convenient access to fully subsidized referral and linkage services to low income families in Wheeling through our Wheeling Resource Center.
e) Allows OMNI to more effectively attract county/state/local/private funding that can be directed towards services for Wheeling residents.

In addition to the above, OMNI would be providing services that have a meaningful impact on quality of life for youth, families, and ultimately the community. Based upon county, state and federal measures and outcomes for youth and families that engage in our programs, OMNI demonstrates:

1) Improved school success for at-risk populations.
2) Reduction in family conflict that otherwise results in runaway youth and abuse.
3) Reducing the initiation alcohol and drug use among teens.
4) Reducing/eliminating existing alcohol and other drug use for teens.
5) Reducing teen pregnancy rates.
6) Reduction in need for state supported institutional/residential/correctional care for teens.
7) Reduction in re-occurring child abuse or neglect."

The applicant has identified the targeted location and demographic of its clients and believes a significant segment of its clients live within a square mile of the proposed use. The applicant has provided a long list of services that OMNI would provide that would have a meaningful impact on the quality of life for youth, families, and the community.

2. State how the special use will not alter the essential character of the area in which it is to be located. (Explain how the proposed special use is appropriate for the neighborhood or shopping center and how the overall character will not be affected by the special use.)

"This location is an office building, and a portion of the building was a rental space for OMNI's counseling and Resource Center services from the mid-1990's to 2008. Our occupancy would maintain the characteristics of a commercial office.

Proposed changes to the facility would be to the inside to meet code requirements and improve space functionality. On the exterior, there will be minor cosmetic upgrades to the building appearance, along with replacement of the surrounding fencing and complete parking lot repaving.

Go To Regular Agenda

We do not anticipate any current adverse impact on the overall character of the neighborhood and believe we would be viewed as positive addition. OMNI occupied a part or this building as rental tenants from the mid-1990's – 2008, and there were no adverse results."

OMNI occupied a portion of the property for approximately ten years without any negative effects on the character of the neighborhood. At this time the applicant will reoccupy the entire property. The proposed use will look similar to an office user, which is consistent with the original site plan approval of the building and property.

3. State how the location and size of the Special Use, the nature and intensity of the operation involved in or conducted in connection with it, the size of the site in relation to it, and the location of the site with respect to streets giving access to it, will be in harmony with and will not impede the normal, appropriate, and orderly development of the district in which it is to be located and the development of surrounding properties. (Explain how the proposed use will allow the surrounding area to develop appropriately. Is the use too large for the site? Will it be in a location on the lot that will cause conflicts with adjacent properties? Does the use create noise, odor, smoke, or light that will affect other properties?)

"No changes are anticipated to square footage or the footprint of the existing structure.

Proposed office hours will be 9 am – 9 pm Monday thru Thursday, Friday 9 am – 4 pm, Saturday 10 am – 3 pm. The most significant usage will occur between the hours of 4-9 pm, M-TH, and Saturdays 10 am - 3 pm, when families are typically more available for services. At peak times, we would anticipate a maximum of 26 persons in the facility at any one time, (youth, parents, staff), in the facility, with a typical average of 12 persons. Wolf Road is the main thoroughfare, and the parking lot is accessed off of Capri Ct. There is noticeable foot traffic that is currently evidenced by those residents in proximity to the location.

There is no noise, odor, smoke, or light issues affecting adjacent properties that are anticipated.

Our current operations are located in Buffalo Grove, on a site which is about double the size of the proposed site and serves about three times as many people as anticipated at this location, is immediately adjacent to a residential area on two sides, a high-end jewelry store and bank on another side, and is fronted by a major thoroughfare. Same type of services, same service population, and over 25 years we have not had any problems, complaints, concerns, or adverse impacts on the neighbors."

The proposed social service facility use will operate in harmony with the developed parcels in the vicinity and will not impede additional development.

4. State how the location, nature and height of buildings, walls and fences, and the nature and extent of the landscaping on the site shall be such that the use will not hinder or

Go To Regular Agenda

discourage the appropriate development and use of adjacent land and buildings, or will not impair the value thereof. (Explain how the proposed use will not prevent development on adjacent properties. Will the proposed use have a negative impact on existing adjacent land uses?)

"There are no changes to building size in any manner, and the fence will be replaced with one of similar design and height to maintain privacy and appearance.

No adverse effects on surrounding properties are anticipated, and it is to be believed that cosmetic improvements and ongoing maintenance should improve attractiveness of the location."

The applicant proposes improvements to the property, as needed. The existing fencing and trash enclosure will be replaced. A dead tree will be replaced. A rain garden will be added to improve stormwater management and add visual interest to the landscape.

5. State how the parking areas will be of adequate size for the particular use, properly located, and suitably screened from adjoining residential uses, entrance and exit drives shall be laid out so as to prevent traffic hazards and nuisances, and the development will not cause traffic congestion. (Is adequate parking provided? Is parking area visible from adjacent homes? Are the entrance and exit drives designed for safe access to the site? Will the special use generate so much traffic as to cause congestion? Will visitors to the special use access the site through residential streets?)

"The parking lot currently accommodates 29 parking spots, which would be changed to 25 slots and two handicapped slots.

Currently the parking lot has two combined entrances/exists, which would be changed to one entrance/exit and one solely dedicated exit.

The building screens the main parking from the east and north, and six foot high stockade style fencing provides screening west and northeast.

Given past history, we anticipate a minimal impact due to auto traffic, as the proximity of housing and neighborhoods that are likely to include our service population allow for/promote foot traffic.

The parking lot will be completely repaved and restriped."

Based upon the proposed maximum occupancy of 26, the parking is more than adequate for the proposed use. The parking lots are adequately screened by a 6-foot stockade fence. The side parking area has been reconfigured to safely accommodate traffic.

6. State how the property in question cannot yield a reasonable return if permitted to be used only under the conditions allowed by the regulation in that zone. (Other than the special use listed in this application, the proposal must meet all other requirements of the Zoning Code. Note any other exceptions.)

Go To Regular Agenda

"It is our understanding that the issue in question as related to requiring a Special Use classification is our request to provide outpatient substance abuse counseling services for youth ages 12-18 years. These services are different from other counseling services only in the focus of problem remediation.

The substance abuse treatment services OMNI provides are classified as either: 'Early Intervention', which are for youth who have used alcohol or other drugs at some point in the past six months but are nor regular users nor do they have an identified consequence in conjunction with their use; or 'Substance Abuse', which are for youth who have used more regularly and are having an identified consequence as a result of their usage, but do not meet the severity criteria for 'addiction'.

For most youth who are presented for services, their alcohol or other drug use is often only identified through engagement in counseling. Failure to secure a Special Use classification that would allow for the provision of related substance abuse services would have the following consequences:

a) Families that have a substance using youth would have to locate another youth serving provider, and in many cases a provider that would accept Medicaid payment or that would provide a subsidized service.
b) If the substance use by the teen was not recognized until after services were initiated, as is frequently the situation, a referral would have to be made to another site or organization, limiting ease of access for service recipients and increasing the chance of non-compliance with service attendance.
c) OMNI would not be able to receive financial reimbursement for services through Medicaid, health insurance policies, or state funding that subsidizes services for many families for services rendered past or future."

No other zoning relief is requested besides the proposed special use.

CONDITIONS FROM PLAN COMMISSION RECOMMENDATION

There is one condition of approval associated with the Plan Commission recommendation for Docket No. 2016-16. The recommendation for Docket No. 2016-16 included the following condition of approval, which has been incorporated into the attached special use ordinance:

1. The area where the sidewalk is removed shall be sodded.

MODIFICATIONS FOLLOWING PLAN COMMISSION HEARING

The plans have not been modified following the Plan Commission hearing.

STAFF REVIEW

Fire Department Review: The Fire Department has reviewed the plans and provided a comment memo, dated August 18, 2016. Based on the information provided in the revised floor plans, the installation of a fire suppression system is not anticipated at this time.

Go To Regular Agenda

Engineering Division Review: The Engineering Division has provided a comment memo on August 19, 2016. With the exception of comment #5, these comments will be addressed at permit. Regarding comment #5, which states the parking space and aisle dimensions for the south (side) lot, planning staff believes this code requirement can be waived because these conditions are existing and the parking aisle is one-way only.

Impact on Adjacent Uses: No significant impact on adjacent uses is expected.

Senior Planner's Recommendation to the Plan Commission: Prior to making a motion at the July 28th hearing, staff recommended to the Plan Commission review of the following items with the petitioner:

- Determine if the proposed fence will be natural wood or stained;
- Identify the proposed tree species; and
- Discuss if the existing landscaped areas are irrigated.

At the continued hearing on August 25th, the petitioner sufficiently addressed at the concerns of staff.

DIRECTOR OF COMMUNITY DEVELOPMENT RECOMMENDATION

At the initial Plan Commission hearing on July 28th, several outstanding issues remained. The Plan Commission continued the hearing to August 25th so that the petitioner could address lighting, landscaping, and the parking lot configuration. On August 25th the Plan Commission found that all issues were sufficiently resolved through the revised plans and they recommended approval of the special use. An Ordinance is attached for the Board's consideration.

Andrew C. Jennings
Director of Community Development

Attachments:
Ordinance (precedes this report)
Findings of Fact and Recommendation (Draft)
Fire Department memo
Photos of existing conditions (staff)
Project description
Response letter
Existing floor plan
Proposed floor plans
Site plan
Photometric plan
Existing landscape plan
Proposed landscape plans
Bicycle rack specifications
Fencing specifications

Go To Regular Agenda

Docket No. 2016-16

ORDINANCE NO. _____

AN ORDINANCE GRANTING SPECIAL USE-SITE PLAN APPROVAL FOR A SOCIAL SERVICE FACILITY FOR OMNI YOUTH SERVICES AT 210-212 N. WOLF ROAD

WHEREAS, the Plan Commission of the Village of Wheeling has held a public hearing, duly noticed, on July 28, 2016, and continued to August 25, 2016, to consider a request for a special use-site plan approval under Title 19, Zoning, of the Wheeling Municipal Code, Special Use-Site Plan Approval as required under Chapter 19-05 Mixed Use Districts, Chapter 19-10 Use Regulations, and Chapter 19-12 Site Plan Approval Requirements, and associated sections, to establish a social service facility at 210-212 N. Wolf Road, Wheeling, Illinois, hereinafter legally described and zoned MXC Commercial Residential Mixed Use District; and

WHEREAS, the Plan Commission of the Village of Wheeling has reported its Findings of Fact and Recommendation to the President and Board of Trustees, with a motion to approve the petitioner's request, that passed by a vote of 7 ayes, 0 nays, 0 abstaining, and 0 absent; and

WHEREAS, the President and Board of Trustees deem it to be in the best interest of the Village to grant the petitioner's request, subject to conditions;

NOW THEREFORE BE IT ORDAINED BY THE PRESIDENT AND BOARD OF TRUSTEES OF THE VILLAGE OF WHEELING, COUNTIES OF COOK AND LAKE, STATE OF ILLINOIS:

Section A

This Board of Trustees, after considering the Findings of Fact and Recommendation of the Plan Commission and other matters properly before it, hereby finds:

- That the special use as requested will not alter the essential character of the area in which it is to be located;
- That the location and size of the special use, the nature and intensity of the operation involved in or conducted with it, the size of the site in relation to it, and the location of the site with respect to streets giving access to it, will be in harmony with and will not impede the normal, appropriate, and orderly development of the district in which it is located and the development of the surrounding properties;
- That the special use requested will not be injurious to the use and enjoyment of other property in the immediate vicinity for purposes already permitted nor diminish or impair property values of surrounding properties;

- That the parking areas will be of adequate size for the particular use, properly located, and suitably screened from adjoining residential uses, entrance and exit drives shall be laid out as to prevent traffic hazards and nuisances; and
- That the special use requested will conform to all applicable regulations and standards of the zoning district in which it is to be located.

Section B

A special use is hereby granted under Title 19, Zoning, of the Wheeling Municipal Code, Chapter 19-10 Use Regulations, Section 19.10.030 Special Uses, in order to establish a social service use in the MXC Commercial Residential Mixed Use District, in accordance with the site plan and appearance approval granted in Section C of this Ordinance, to be located at 210-212 N. Wolf Road, Wheeling, Illinois, hereinafter legally described:

LEGAL DESCRIPTION:
LOT 1 IN CAPRI TERRACE, A SUBDIVISON OF THE SOUTHEAST ¼ AND THE SOUTWEST ¼ OF SECTION 2, TOWNSHIP 42 NORTH, RANGE 11, EAST OF THE THIRD PRINCIPAL MERIDIAN, IN COOK COUNTY, ILLINOIS.

(The above described property is commonly known as 210-212 N. Wolf Road, Wheeling, Illinois, and is zoned MXC Commercial Residential Mixed Use District.)

Section C

Site Plan and Appearance Approval is hereby granted under Title 19, Zoning, of the Wheeling Municipal Code, Chapter 19-12 Site Plan Approval Requirements, with the site development to be completed substantially in accordance with the following exhibits, herein attached and made part of, submitted August 15, 2016 (except as noted), by OMNI Youth Services, to be located at 210-212 N. Wolf Road, Wheeling, Illinois:

- Project description (2 sheets), received 6.23.2016;
- Response letter;
- Existing floor plan;
- Proposed floor plans (2 sheets);
- Site plan,
- Photometric plan;
- Existing landscape plan;
- Proposed landscape plan;
- Bicycle rack specs (4 sheets) and
- Fence specs (6 sheets).

Section D

The Special Use, Site Plan, and Building Appearance Approval granted in Sections B and C of this Ordinance are subject to the following condition of approval:

Go To Regular Agenda

1. The area where the sidewalk is removed shall be sodded.

Section E

This Ordinance shall be in full force and effect from and after its passage and approval, according to law.

Trustee_____moved, seconded by Trustee_____, that

Ordinance No. _____be passed, this _____ day of _____, 2016.

President Argiris _____ Trustee Lang _____

Trustee Brady _____ Trustee Papantos _____

Trustee Krueger _____ Trustee Vito _____

Trustee Vogel_____

_____

Dean S. Argiris

Village President

ATTEST:

_____

Elaine E. Simpson, Village Clerk

APPROVED AS TO FORM ONLY:

_____

Village Attorney

PUBLISHED in pamphlet form this_____day of_____, 2016, by order of the Corporate Authorities of the Village of Wheeling, Cook and Lake Counties, Illinois.

Go To Regular Agenda

MEMO – Fire Prevention Bureau

TO: Brooke Jones, Village Planner

FROM: Ronald S. Antor, Fire Inspector

CC: Andrew Jennings, Director of Community Development

Keith MacIsaac, Fire Chief

FPB File

DATE: August 18, 2016

SUBJECT: Proposed Youth Services Office Building – 210-212 North Wolf Road – Revised plans received for review by the Fire Department, August 16, 2016.

The Wheeling Fire Department has reviewed the revised submittals received related to the above referenced project and has the following comments:

Site Plan

1. There petitioner's plans do not show any significant changes to the existing site plan.

210-212 North Wolf Road - Proposed Youth Services Office Building

1. The petitioner is proposing to remodel and occupy an existing one-story with partial second floor multi-tenant office building as a single tenant occupancy. There would be no change in Use Group from the existing (B) Business Use Group occupancy as defined in the 2012 Edition of the International Building (IBC) and Fire Prevention Codes (IFC) for the new occupant.
2. All construction/remodeling within the building would need to comply with the Village's Building and Fire Prevention Codes (2012 Editions of the International Building Code & International Fire Code – with amendments).
3. As noted in Comment #2, the proposed tenant buildout will need to comply with the Village's Building and Fire Prevention Codes. One of the items that was previously identified included the potential addition of a fire sprinkler system. Based on the current submittals the following comments are provided:

    a. The petitioner has provided additional documentation with the current submittal to clarify the proposed occupant load for the building compared to the prior use. Based on the information provided, there would be no increase in the building's occupancy load when compared to the prior use. Therefore, the previously referenced addition of a fire sprinkler system would not be required under the Village's Fire Prevention Code.

    b. Based on the current submittal the Fire Department recommends that the following Condition of Approval be included for the Special Use:

    The design occupancy load for the building shall be 90 total occupants. Any future building changes or remodeling that leads to a design occupancy load of greater than 90 occupants shall require the installation of an automatic fire sprinkler system.

At this time there are no other Fire Department comments related to the project as presented in the documents reviewed.

Go To Regular Agenda

MEMORANDUM

TO: Brooke Jones, Senior Planner

FROM: Kyle Goetzelmann, Civil Engineer I

COPY: Jon Tack, Village Engineer

DATE: **August 19th, 2016**

SUBJECT: **OMNI Youth Services – Special Use**
210-212 N. Wolf Road - Review Comments

The Engineering Division received a Project Description, Plat of Survey, Site Plan with Notes, Floor Plan, Demolition Plan, Ceiling Plan, Room Finishing Schedule, and Plant List for the subject project on June 29th, 2016. The Engineering Division has completed a review of the above referenced submittal and offers the following comments at this time:

1. Positive drainage towards Capri Terrace curb line must be maintained when the parking lot is repaved.
2. Locations of (4) 9”x9” catch basins must be included on the site plan.
3. Underdrain must be installed according to the Village’s “Underdrain Trench Standard” detail which can be found on the Village website.
4. Must adhere to the Village “Parking Lot Pavement” standard detail in areas where there is trenching through the parking lot.
5. Although the parking configuration in the front (south) lot appears to be functional, it does not adhere to the parking stall/aisle dimensions for 60 degree angled parking as stated in the Village Code which can be seen below.
    a. Parking stall length: 17.5’
    b. Parking stall width: 9.5’
    c. Single row + aisle total width: 40.0’
6. Overland flow route must be shown for when rain garden underdrain system fills with water. The concern is standing water on the sidewalk and possible ice.
7. Engineering permits must be obtained before any work is done on site.

Go To Regular Agenda

DRAFT DOCKET NO. 2016-16

FINDINGS OF FACT
AND RECOMMENDATION

To: Village President and Board of Trustees

From: Wheeling Plan Commission/Sign Code Board of Appeal

Re: **Docket No. 2016-16**
OMNI Youth Services
210-212 N. Wolf Road
Special Use-Site Plan Approval of a Social Service Facility

OMNI Youth Services, Inc., owner, is seeking Special Use-Site Plan Approval as required under Chapter 19-05 Mixed Use and Overlay Districts, Chapter 19-10 Use Regulations, Chapter 19-12 Site Plan Approval Requirements, and associated sections, to establish a Social Service Facility at 210-212 N. Wolf Road, Wheeling, Illinois, which is zoned MXC Commercial Residential Mixed Use Area.

Chairman Ruffatto called Docket No. 2016-16 on July 28, 2016. Present were Commissioners Issakoo, Johnson, Powers, Ruffatto and Zangara. Commissioners Dorband and Sianis were absent with prior notice. Also present were Brooke Jones, Senior Planner, Mallory Milluzzi, Village Attorney, Fire Inspector Ron Antor and Kyle Goetzelmann, Civil Engineer.

Commissioner Powers read the following statement aloud.
A zoning Special Use, as defined in Title 19, of the village of Wheeling (Zoning), is a use of parcel of land that requires review and consideration before approval due to circumstances or effects on the surrounding properties that may adversely affect them. In order to be considered for a special use the petitioner is required to demonstrate through testimony to the Plan Commission at the public hearing why their request meets the conditions of the village code including, but not limited to, how the proposed use will not damage the enjoyment or use of the surrounding properties. Prior to the public hearing the petitioner provides written statements meant to show that their request for a special use meets the standards established in Title 19. The Commission Chairperson will typically direct that these statements be entered into the record without a full reading of them at the hearing. Based upon the testimony and supporting materials submitted, the Plan Commission will make findings in support of, or against, the petitioner's testimony and report those findings to the Village Board.

Mr. Dan Shapiro, Attorney, 3661 Woodhead Drive, Northbrook and Ms. Doryce McCarthy, COO, OMNI Youth Services, 1111 W. Lake Cook Road, Buffalo Grover were present and sworn in.

Mr. Shapiro mentioned that OMNI Youth Services was previously located in the Village of Wheeling for many years.

Ms. McCarthy reported that OMNI had been around since 1972 and had started in the Village of Wheeling in a small house on Wolf Road and had remained there until 1985. They were then located in the current proposed building from 1992-2008 when they lost some funding and needed to downsize.

DRAFT

Ms. McCarthy explained their mission was to partner with parents in the community to provide innovative and transformational behavioral and educational support services to children, adolescents and young adults that create pathways to success and healthy behaviors. They want to partner with families and the community to make sure kids are successful. Their services are available to the residents of Wheeling and Wheeling Township in both English and Spanish. They provide services on a sliding fee scale and also accept Medicaid and MCO. She explained the majority of their service recipients reside in the area around the building. They will remove a huge transportation barrier by having the use of this building. They will maintain their Buffalo Grove facility located on Lake Cook and Arlington Heights Road that offer them very large group rooms and ability to hold big events. They also have a facility in the township building further down on Arlington Heights Road. Ms. McCarthy stated they serve youth who are 12-18 years old and a majority of them are coming from the Village of Wheeling and around the building. Youth are referred to them by schools, different community organizations, Police and other families. They are referred because of mood disorders, anxiety disorders, substance use experimentation, substance abuse, youth development, developing leadership skills in kids and legal issues. They provide it through a combination of family, individual, group and crisis intervention. Their staff are Masters Level and run programs that are proven to be effective. They don't just let the kids hang out in the building. The youth are greeted by staff in the lobby and escorted inside the building. Smoking is not permitted in their facility. Ms. McCarthy stated that 39% of their clients were Hispanic and 44% were white. 72% of their clients report an income of under $22,000.

Ms. McCarthy announced they received a new grant that focuses on working on adolescent pregnancy prevention. Wheeling was identified as a high area for adolescent pregnancies. They work closely with the Wheeling Police Department. They have Police social workers in three Police Departments (Prospect Heights, Vernon Hills, Highland Park). They also have community outreach programs to serve low income families and connects them to emergency resources.

Mr. Sean Ehlke, Architect, Ehlke Lonigro Architects, 224 S. Milwaukee Avenue, Wheeling, IL was present and sworn in.

Mr. Ehlke provided photographs of the building. The main entrance to the building is located on the west side. The building is mostly face brick with aluminum framed windows and storefront. The site is being refreshed to use the building. The west side is adjacent to all of the parking provided on the site. There is fencing that hides the electrical panels. The south elevation includes windows and is all brick. The parking lot has suffered deterioration over time and is looking to be addressed.

Mr. Ehlke provided the proposed site plan. They are refreshing the existing. He will discuss the parking, fencing, trash enclosure and landscaping.

Mr. Ehlke stated all of the parking is located on the west and south sides of the building. The existing parking lot layout provided for 29 parking spaces but no handicapped spaces. They are proposing to grind and repave the existing lot and then restripe it. They will incorporate the two required handicap parking spaces. They are looking to change the direction of the angled parking to make it an exit only and not an entrance because of the proximity to Wolf Road. They will lose one

DRAFT

parking space from 29 spaces to 28 spaces. Additionally, they have painted striping for ingress and egress arrows as well as the exit egress at the corner. Staff wanted to see provisions for bicycle parking for two. OMNI confirmed bike parking would be provided onsite. Mr. Ehlke referred to the existing parking lot lights which illuminate the parking on the west and south.

Mr. Ehlke referred to the apartment building located to the west of the site. They are proposing a 6' high cedar wood stockade fence for screening. The fencing will include metal poles to provide support. The northwest corner has a trash enclosure. The screening will be addressed in a similar manner with fencing.

Mr. Ehlke referred to the landscaping. There are two existing trees at the main entrance to the building. One of the trees is dead and will be replaced. They are proposing a new tree in the northeast corner. He referred to the rain garden area. The roof on the existing building drains to two scuppers and downspouts located on the south wall. They currently spill onto the pavement and is a maintenance issue. They are proposing two underground lines to connect the two downspouts and bring it over to the lawn area along the south property line. Plant materials were provided for the rain garden area.

Mr. Shapiro reported OMNI has served 625,000 people over 45 years. There have been no complaints or problems in Buffalo Grove in 25 years. They have sent out notices in Wheeling to the neighbors and have not heard about any issues.

Mr. Shapiro stated that all of Staff's proposed conditions were acceptable to them. He stated the build out would take 6 months. They want to discuss and clarify the comments from the Fire Department. They are asking that the recommendation would be contingent upon working out some of the clarifications.

Chairman Ruffatto opened the discussion to the Public. No one from the audience came forward.

Chairman Ruffatto asked for a description of the floor plan. Ms. McCarthy confirmed they were not adding any space but were just changing the layout. They want to make flexible workspace so it can be used for many different things. The larger group room is not meant to host a large meeting but meant to give them the flexibility to do experiential intervention using wood planks and pedestals. Staff will not have a dedicated workspace except for supervisors. The labeled group meeting rooms would be used for a session including a supervisor and family of 3-5. The smaller rooms will be used for meetings between a couple staff or privacy for a phone call. She confirmed the layout was meant for the flexibility. They don't expect to have more than 25-28 people in the building at one time. They will keep the Buffalo Grove facility.

Chairman Ruffatto questioned if the projected 6 months was for the complete build out. He questioned the reason for phases. Mr. Shapiro confirmed 6 months was for the complete build out. Chairman Ruffatto suggested a discussion regarding the Fire Department's request for a sprinklered building. Mr. Shapiro wants more communication about the use and how it would not intensify the use. He mentioned the cost to retrofit it would be at least $100,000. He wants to see if there was a way to avoid spending $100,000 through a clarification and use of the space. He confirmed the

DRAFT

intensity of the use would not change. The interior will not intensify. He confirmed they were not adding a mezzanine. He apologized for the misuse of the word. He explained the "mezzanine" would only be used for storage. Mr. Shapiro explained the phasing could refer to the intensity of use that triggers sprinklers. He thought there could have been a discussion on phasing that would allow for a use without triggering sprinkling the entire building. Ms. Jones clarified that the phasing discussion only started because the floor plan states the build out was in phases. Mr. Shapiro would like to obtain a favorable recommendation contingent on further discussion with Staff and Fire Department. Ms. McCarthy further explained the phasing also related to finances. If things remain as they are they could move forward with all three phases. If things change, things may need to slow down. They receive about 60% of their funding from the State of Illinois. The phasing was to give them the options in case of financial issues. Chairman Ruffatto explained the floor plan needed to list everything correctly. The confusion with the Fire Department needs to be resolved before it goes to the Plan Commission. Mr. Shapiro agreed to make the facts clearer with revisions.

Commissioner Johnson agreed it would be great to have a clearer picture of what was going on with the interior build out.

Commissioner Johnson had an issue with changing the parking direction. The change would have the exit so close to Wolf Road and it could be difficult to exit if there was another car on Wolf Road. He suggested rethinking the change.

Commissioner Johnson thought bike racks for two bicycles was not enough considering the age group of the clients.

Commissioner Zangara suggested it might be easier to see the layout of the different rooms if furniture was added to the plans.

Commissioner Zangara questioned how long the check-in process was for the parents. Ms. McCarthy explained services occurred with parents dropping kids off and other sessions were for families. She mentioned that some of their services don't even occur in the building. They are located in 14 different schools within the area and they facilitate a lot of groups at school. Commissioner Zangara questioned the length of their sessions. Ms. McCarthy explained a family session lasted about 1 hour, a group session about 2 hours and one night there were consecutive groups so a youth could be there for 4 hours.

Commissioner Zangara questioned details regarding the mezzanine. Ms. McCarthy confirmed it was a floor and used for storage. She explained they offer an outdoor wilderness therapy program. Kids will go out in the wilderness for 3, 7 or 10 days. They need to store the camping equipment including tents, backpacks, mats, boots and etc. Commissioner Zangara questioned if they hired a bus service for the camping trips. Ms. McCarthy confirmed they have two vans and a trailer parked in Buffalo Grove.

Commissioner Zangara questioned if the building was currently sprinklered. Fire Inspector Antor confirmed the building was currently a non-sprinklered structure. He explained the issue with the retrofit was based on the review of the documents. They were increasing the occupancy load based

DRAFT

on what some of the rooms showed. Increasing the occupancy load in the building was one of the triggers for the retrofit provision. Commissioner Zangara questioned if it could be eliminated by capping the occupancy load. Fire Inspector Antor explained that capping an occupancy load was very difficult.

Commissioner Issakoo was excited that the services were coming back to Wheeling. He questioned what data supported that the clients were from a mile radius of the site. Ms. McCarthy explained they looked at the income levels at different parts of Wheeling. They serve a low income client.

Commissioner Issakoo shared the same concern about the bike rack. He questioned if the older teenagers came on their own. Ms. McCarthy explained sometimes they come on their own. They don't have a lot of bikes at their Lake Cook Road facility but could be because of the location on the high traffic road.

Commissioner Issakoo questioned if certain days of the week were busier. Ms. McCarthy explained during the summer they see kids during the day for a mix of therapy and activities. During most of the year it's administrative staff in the building during the day. They get busier after 3:30/4:00 p.m. and clients remain until 9:00 p.m. and staff remain to 10:00 or 10:30 p.m.

In reply to Commissioner Issakoo's question, Ms. McCarthy was unsure about the sign at this time. She thought they would just redo the sign in its current location but she will confirm at the next meeting.

In reply to Commissioner Powers' question, Ms. McCarthy confirmed the hours as 9:00 a.m. – 9:00 p.m. Monday through Thursday, 9:00 a.m. – 4:00 p.m. on Friday and 10:00 a.m. – 3:00 p.m. on Saturday. Sundays were for appointments only and were rear.

Commissioner Powers mentioned the rear door on the west side of the building was rusty. Ms. McCarthy confirmed it would be repainted.

Commissioner Powers agreed the number of bike racks needed to be increased. He wanted to make sure the bike rack location was noted on the site plan at the next meeting.

Commissioner Powers asked for details regarding the materials for the fence. Mr. Tony Kruschel, General Contractor, APK Operations, 2322 Magnolia Court East was sworn in. Mr. Kruschel confirmed the proposed fence is 6' high using flat raw cedar board. There will be wood horizontal supports with metal vertical supports. Commissioner Powers questioned if the metal would be blocked. Mr. Kruschel confirmed the metal would not be seen. Chairman Ruffatto explained the details needed to be included on the plans.

Commissioner Powers referred to Engineering's comment on the plan regarding parking lot striping/dimensions. Mr. Goetzelmann confirmed he wants to make sure the parking spaces and drive aisles were wide enough and needed to be included on the site plan.

Commissioner Powers referred to Staff's comment about heavy water causing standing water and

DRAFT

ice. He questioned if it related to the two downspouts on the south side. Mr. Goetzelmann explained he made some comments about the rain garden. Currently, there may not be any drainage issues but with the rain garden it will have four drains that were not shown on the site plan. They want to see the location included. Engineering's concern is when the water infiltrates the rain garden they don't want the water to flood the sidewalk. Depending on where the drains were located, it may negatively affect the way it drains.

Commissioner Powers wants a detailed landscaping plan of the proposed plants for the rain garden.

Commissioner Powers questioned if there was a photometric plan for the site. He questioned if there was concern regarding the lighting for the use. He wants to make sure the lighting is sufficient for the use since they have evening hours. Ms. Jones explained there was probably a light plan approved with the original site plan approval many years ago. There is no proposed photometric plan.

Commissioner Powers questioned the type of trees being added. He wants to know the species and caliper size documented.

Commissioner Powers referred to the phasing. He suggested color coding the site plan for the different phasing. Ms. Jones questioned if the intent was to construct all at once. Ms. McCarthy agreed it was their intent. Ms. Jones questioned if the petitioner would be in agreement to remove the label "phasing" from the plans. Mr. Shapiro was in agreement.

Chairman Ruffatto asked Fire Inspector to provide more details on the fire suppression that's needed. Fire Inspector Antor explained the building was previously an office occupancy and when the building was originally designed it was a B use group at roughly 100 square foot per person. The occupancy load would be about 100 people. When he originally met with OMNI's staff a few months ago they told him they would just have offices. Based on that information, they were essentially keeping the same character of the building so the building would not need to be sprinklered. When the plans were presented, there were 10 larger rooms that had different descriptions and those types of spaces were calculated differently as an assembly use and the occupancy load increases and would exceed the original use and would trigger the retrofit provision in the Village's sprinkler ordinance.

Fire Inspector Antor referred to the word "mezzanine" and explained it was a method to increase floor space for occupancy where you don't have to meet certain code requirements.

Mr. Shapiro would like take the opportunity to clean up the floor plan and return to the Plan Commission.

Chairman Ruffatto mentioned there wasn't a landscaping plan for the front with the existing bushes. He mentioned the landscaping looked old and tired. He explained upgrading the landscaping would make the building look a lot nicer. He felt a detailed landscaping plan would be very beneficial.

Chairman Ruffatto questioned if the site was irrigated. Mr. Shapiro agreed to look into it.

DRAFT

Chairman Ruffatto questioned if the fencing around the electrical would be replaced. Mr. Ehlke confirmed it would be replaced.

Chairman Ruffatto referred to Commissioner Johnnson's comment about changing the angle parking. He felt having the exit there would cause more of an issue than keeping it as is. He asked for an explanation on the reasoning they were changing it. Mr. Ehlke confirmed they did not do a traffic study. They looked at the proximity of the apron to Wolf Road. Their feeling was any southbound traffic coming in would be a tight maneuver. Chairman Ruffatto mentioned he had driven into the parking lot and logically he went right into the lot. He felt people would use it since it was the first entrance. Chairman Ruffatto asked for Mr. Goetzelmann's thoughts on it. Mr. Goetzelmann mentioned the only concern that had been brought up was the tight turn from Wolf Road into the entrance but he felt the radius would not be too sharp to accommodate a vehicle. He personally felt it would be better as an entrance than an exit. Mr. Ehlke agreed to review the situation.

Chairman Ruffatto reviewed the following items that should be included on the site plan.

- Striping and dimensions;
- Location of four drains (final engineering);
- Floor plan revisions;
- Landscape plan;
- Detail on the fencing;
- Bicycle parking;
- Rusty door shall be repainted; and
- Identify the proposed tree species and sizes

Ms. Jones questioned if it was just a consideration of upgrading the landscaping along Dundee Road. She did not think a landscaping plan was necessary if they were not making changes. They could just provide the tree species and sizes. They have already provided a nice plant list so the rain garden species mix could be limited only to the identified plants. Chairman Ruffatto expressed a concern regarding the front of the building and not the rain garden. He felt the site should have a landscaping plan. Ms. Jones questioned if the petitioner needed to provide additional landscaping or was it adequate to just identify the existing. Chairman Ruffatto felt they should identify the existing but could add landscaping. Commissioner Powers agreed it looked tired. Chairman Ruffatto explained the landscape plan did not have to be professional but needed to include all of the information.

Commissioner Powers moved, seconded by Commissioner Johnson to continue Docket No. 2016-16 to August 25, 2016.

On the roll call, the vote was as follows:

AYES: Commissioners Issakoo, Johnson, Powers, Ruffatto, Zangara
NAYS: None
ABSENT: Commissioners Dorband and Sianis

DRAFT

PRESENT: None
ABSTAIN: None

There being five affirmative votes, the motion was approved.

August 25, 2016 Public Hearing

Chairman Ruffatto called Docket No. 2016-16 on August 25, 2016. Present were Commissioners Dorband, Issakoo, Johnson, Powers, Ruffatto, Sianis and Zangara. Also present were Brooke Jones, Senior Planner and Mallory Milluzzi, Village Attorney.

Mr. Justin Silva, Associate, 3661 Woodhead Drive, Northbrook, was present and sworn in. Ms. Doryce McCarthy, COO, Omni Youth Services, 1111 W. Lake Cook Road, Buffalo Grove, IL and Mr. Sean Ehlke, Architect, Ehlke Lonigro Architects, 224 S. Milwaukee Avenue, Wheeling, IL were present and previously sworn in.

Mr. Silva reported that Mr. Shapiro appeared before the July 28th Plan Commission meeting. There were a number of requests and concerns that were raised from the Commission at the meeting. He referred to the following concerns:

- Clearer site plan that provided dimensions for parking and a floor plan showing individual furniture and office space;
- Concerns from the Fire Department and retrofitting the sprinkler system;
- Concern there was no landscape plan and no bike rack shown on the site plan;
- A request to provide cut sheets for the proposed cedar fence;
- Providing specific species of proposed plants for the front garden area and side area off Wolf Road;
- Request that the existing egress and parking layout remain the same for the parking lot on the south side of the building; and
- Repainting some of the rusted doors on the exterior of the facility.

Mr. Silva felt they addressed all the concerns and provided Staff with the plans. He introduced Mr. Sean Ehlke, Architect to review the changes.

Mr. Ehlke reviewed the plans. He provided the proposed site plan. They are looking to basically reuse the site as is. They provided the dimensioning for the proposed parking. There are currently 29 parking spaces and by repaving and restriping they also end up with 29 parking spaces including the two handicapped spaces. They are showing the angled parking as it exists along the south side of the building. There are seven spaces from corner to corner. The dimension from the building to the edge of pavement is shown on the plan as 34’ 4”. Additionally, on the west side of the building they will repaint the service door as shown. A bike rack for seven bikes is shown on the north end. A 6’ high stockade fence around the trash enclosure area is shown. The existing fence along the west property line and a portion of the north property line will be replaced. A do-not-enter sign has been added at the end of the one way traffic.

Mr. Ehlke referred to the floor plan. He met with Fire Inspector Antor regarding the concerns the

DRAFT

Fire Department had about the occupancy count and the initial plans that were submitted. They did an analysis based on the overall building square footage based on a business classification that gets them to 86 occupants. Fire Inspector Antor asked them to analyze the current building and then with the proposed build out. When they analyzed the existing building they came up with 143 occupants. When they did the analysis based on the proposed interior changes they came up with 144 occupants. He felt they were basically keeping the building in a similar style as was originally constructed. They simplified the floor plan to show the intended use of all the spaces as well as to show the intended furniture layout of each area. They counted 90 occupants as the maximum number based on the layout. The Fire Department was in agreement with the proposed plans.

Mr. Ehlke confirmed a photometric plan was provided as requested. The fixtures are being changed to LED.

Mr. Ehlke reported the landscape plans had been submitted to provide additional details.

Ms. McCarthy thanked the Commission for the opportunity to return. She felt all of the concerns had been addressed and was now more excited about the building. She was available to answer any questions.

Commissioner Issakoo questioned if the angled parking had been changed. Chairman Ruffatto confirmed the parking was remaining as is.

Commissioner Issakoo questioned if an occupancy of 90 would be included as a condition. Ms. Jones explained the occupancy of 90 was based upon the Fire Department's review and their system of counting occupants. She explained when Staff discussed occupants they were looking at how the business operations would actually function. Based upon their submittal, it was stated there would be a maximum occupancy of 26. She preferred not to include the Fire Department's occupancy in the Special Use ordinance since it could be confusing from a zoning perspective. She feels comfortable that the Fire Department would ensure their requirement was met.

Commissioner Issakoo was happy with the changes.

Commissioner Sianis had no further comment.

Commissioner Johnson questioned if the utility enclosure would be upgraded along with the new fence. Ms. McCarthy confirmed it would be upgraded.

Commissioner Johnson questioned what the "X" area between the two stairways represented. Mr. Ehlke confirmed it was a void space with no access to it.

Commissioner Johnson felt the petitioner did a great job on responding to everything from the last meeting.

Commissioner Powers questioned if the walk on the northeast side would be removed. Ms. McCarthy confirmed it would remain.

DRAFT

Commissioner Powers was happy with the proposal.

Commissioner Zangara referred to the wheel stops by the angle parking. He suggested placing them parallel to the building since it was easier for the snowplowing.

Commissioner Dorband missed the previous meeting but watched the video and read the minutes. She questioned if the mezzanine area was still figured into the equation for a sprinkler system. Ms. Jones explained it wasn't a zoning issue so she did not go over it very closely with the Fire Department. Commissioner Dorband wanted to know the rationale for adding the sprinkler system even though the mezzanine was only being used for storage. Mr. Ehlke explained mezzanine was an inappropriate term to use for the area. He felt it was more of a partial second floor of the overall building footprint. It wasn't a mezzanine since it had walls on all four sides and wasn't open to the story below. They looked at it and the only access up to it was the two stairwells. It is not legal to use it as office space. It will be used as storage for their athletic equipment. Ms. Milluzzi confirmed the Fire Department had determined that sprinklers were not required after they received further clarification.

Commissioner Dorband suggested having the youth maintain the rain garden. Ms. McCarthy explained they had all kinds of youth who come to the agency and felt it could be an opportunity for the youths who need community service hours. However, she explained they try to be careful in not looking like they were working their youth. They do youth development so healthy kids who want to learn leadership skills could do it as a service project. She mentioned that in their Buffalo Grove facility they have companies that want to volunteer to do some of their annual plantings. Commissioner Dorband mentioned that in the school district she had worked at they used a lot of youth to help with their rain garden.

Ms. McCarthy stated she had misspoke earlier and confirmed that they would be removing part of their sidewalk.

In reply to Commissioner Dorband's question, Ms. McCarthy confirmed they were keeping the Lake Cook building.

Chairman Ruffatto mentioned he did not see any landscaping where the sidewalk was being removed. Ms. McCarthy confirmed it would be sod. She explained they want to just remove the temptation for people who want to enter there. Chairman Ruffatto suggested adding a condition to require sod.

Chairman Ruffatto questioned if the fence in the northeast corner of the parking lot would be attached to the wall. Ms. McCarthy confirmed it would be attached and people could not walk on the side of the building.

Mr. Silva requested a favorable recommendation for the Special Use and Site Plan Approval for the social service facility.

DRAFT

Go To Regular Agenda

Commissioner Powers moved, seconded by Commissioner Johnson recommend approval of Docket No. 2016-16 to grant special use approval for a social service facility in accordance with the following exhibits submitted August 15, 2016 (except as noted), by OMNI Youth Services, to be located at 210-212 N. Wolf Road, Wheeling, Illinois.

- Project description (2 sheets), received 6.23.2016;
- Response letter;
- Existing floor plan;
- Proposed floor plans (2 sheets);
- Site plan,
- Photometric plan;
- Existing landscape plan;
- Proposed landscape plan;
- Bicycle rack specs (4 sheets) and
- Fence specs (6 sheets).

And with the following condition of approval:

1. The area where the sidewalk is removed shall be sodded.

On the roll call, the vote was as follows:

AYES:	Commissioners Dorband, Issakoo, Johnson, Powers, Ruffatto, Sianis, Zangara
NAYS:	None
ABSENT:	None
PRESENT:	None
ABSTAIN:	None

There being seven affirmative votes, the motion was approved.

Commissioner Dorband moved, seconded by Commissioner Johnson to close Docket No. 2016-16. The motion was approved by a voice vote.

Respectfully submitted,

_____

Jim Ruffatto, Chairman
Wheeling Plan Commission/
Sign Code Board of Appeals

DISTRIBUTED TO THE COMMISSION 9.02.2016
FOR APPROVAL ON 9.08.2016

DRAFT

Regular Agenda

OMNI Youth Services – 210-212 N. Wolf Road

Docket No. PC 2016-16 (Special Use-Site Plan Approval for a Social Service Facility)

Plan Commission Meetings – July 28, 2016 and August 25, 2016

Village Board Meeting – September 6, 2016

Existing conditions of front entrance along Wolf Road – looking west

Regular Agenda

OMNI Youth Services – 210-212 N. Wolf Road

Docket No. PC 2016-16 (Special Use-Site Plan Approval for a Social Service Facility)

Plan Commission Meetings – July 28, 2016 and August 25, 2016

Village Board Meeting – September 6, 2016

Existing conditions of rear of property – looking north

Regular Agenda

OMNI Youth Services – 210-212 N. Wolf Road

Docket No. PC 2016-16 (Special Use-Site Plan Approval for a Social Service Facility)

Plan Commission Meetings – July 28, 2016 and August 25, 2016

Village Board Meeting – September 6, 2016

Existing conditions along Capri Terrace using panoramic view – looking north

Go To Regular Agenda

OMNI youth services

OMNI Youth Services is submitting a Special Use Application to the Village of Wheeling for the property at 210 – 212 N. Wolf Road. The application and supporting documentation completed by the Executive Director is attached. Below is a brief description of the program.

OMNI Youth Services

OMNI Youth Services has been providing unparalleled services to youth since 1972. OMNI has developed comprehensive, innovative programming for youth and has become one of the leading youth service agencies in Illinois incorporating experiential therapy and a positive youth development approach into its every day functioning. The mission of OMNI Youth Services is partnering with parents and the community to provide innovative transformational behavioral and educational support services to children, adolescents, and young adults that create pathways to successful and healthy behaviors throughout life.

OMNI Youth Services is proposing to use the facility in Wheeling to provide three programs: Out-patient Counseling, Substance Abuse and Pregnancy Prevention, and Community Resource Programs.

Out-Patient Counseling Program

OMNI will provide counseling and early intervention services to local youth ages 12 – 18. Youth are referred by local community sources including: school staff, police, courts, other families, and other youth themselves. Youth are referred for a variety of reasons. During the past fiscal year youth were referred for mood and anxiety issues, substance use and experimentation, youth development, and legal issues. OMNI's service delivery system is unique in its comprehensiveness, providing a broad range of intervention, crisis, and aftercare services. The multiple services that are available to all community adolescents and their families at OMNI include the following: family counseling, individual counseling, group counseling, substance abuse assessment, early intervention and counseling, 24-hour crisis intervention, youth development, and parent education.

Service recipients from the Village of Wheeling make up the largest portion of the clients that receive counseling services at OMNI. It is anticipated that the largest concentration of Wheeling village residents utilizing this facility will come from residences within one square mile of the location.

Prevention and Development

Our prevention efforts focus on community coalition building, education, awareness and policy development which promote and support the prevention of alcohol, tobacco, and other drugs use by youth. Examples of our prevention efforts include: Linked Together Coalition and Social Norms Campaign. A newly secured will grant focus on reducing rates of teen pregnancy and replicating an evidence-based teen pregnancy prevention program in the Wheeling community. OMNI continues to offer youth development opportunities that facilitate the acquisition of leadership skills, encourage connections to the community, promote the development of personal assets and increase the likelihood

Exhibit received June 23, 2016

Go To Regular Agenda

that youth will become healthy and successful adults. Examples of opportunities includes: Student Advisory Board, MYLE Youth Leadership, and Peer Juries.

Community Outreach and Resource Programs

OMNI does effective community outreach to immigrants and low-income community members through programs from CHiL, an innovative approach to after-school services in a middle school, to the provision of emergency assistance to families in need. Services include: information and referral, resource assistance, parenting education classes, and social emotional learning events. These services are provided in English and Spanish through relationships that respect the culture and dignity of all by promoting self-sufficiency.

Proposed office hours will be 9 am – 9 pm Monday thru Thursday, Friday 9 am – 4 pm, Saturday 10 am – 3 pm. The most significant usage will occur between the hours of 4-9 pm, M-TH, and Saturdays 10 am - 3 pm, when families are typically more available for services. At peak times, we would anticipate a maximum of 26 persons in the facility at any one time, (youth, parents, staff), in the facility, with a typical average of 12 persons. The parking lot is designed to accommodate 27 cars at any given time.

Go To Regular Agenda

OMNI youth services

August 15, 2016

Brooke Jones
Village of Wheeling
Planning Division | Community Development
2 Community Blvd. | Wheeling, IL 60090

Dear Brooke,

OMNI Youth Services has updated all of our documents on the website in anticipation of the August 25, 2016 meeting.

We have uploaded new drawings of both the interior and exterior which should address the questions that remained after the initial hearing:

- We have increased the capacity for bicycle parking to 7;
- Returned the signage/pavement markings to the prior configuration in order to accommodate the site flow through the side parking area;
- We have had discussions with the fire inspector after providing him the revised drawings and believe we will not be required to add a fire sprinkler system;
- A dimensioned site plan including parking striping has been included;
- A landscape plan has been submitted which includes the proposed tree species and sizes;
    - This plan also includes the rain garden species;
- The labeling of phases has been removed from the floor plan.

Please let me know if you have additional questions or require additional documentation.

Sincerely,

Doryce McCarthy, LCSW
Chief Operating Officer

Developing youth, strengthening families and serving communities through innovative programs and partnerships.

1111 W Lake Cook Rd
Buffalo Grove, IL 60089
847.353.1500
www.omniyouth.org

Exhibit received August 15, 2016

United Way Agency

EXISTING
SECOND FLOOR PLAN

SCALE: 1/4" = 1'-0"

NORTH

BUSINESS AREAS (2ND FLOOR)
1,021 S.F. / 100 S.F. PER OCC. = 10 OCCUPANTS

AREA ANALYSIS BY SPECIFIC OCCUPANCY CLASSIFICATION

BUSINESS AREAS
7,506 S.F. / 100 S.F. PER OCC. = 75 OCCUPANTS

ASSEMBLY - UNCONCENTRATED (TABLE & CHAIRS)
1,027 S.F. / 15 S.F. PER OCC. = 68 OCCUPANTS

ACCESSORY STORAGE AREAS / MECHANICAL EQUIP. RMS.
109 S.F. / 300 S.F. PER OCC. = 0 OCCUPANTS

TOTAL OCCUPANTS = 143

0' 2' 4' 8'

EXISTING
FIRST FLOOR PLAN

SCALE: 1/4" = 1'-0"

NORTH

BUSINESS AREAS (1ST FLOOR)
7,621 S.F. / 100 S.F. PER OCC. = 76 OCCUPANTS

EHLKE LONIGRO Architects
224 S. Milwaukee Ave.-Ste. F
Wheeling, IL 60090
Office 847.243.8360
Fax 847.243.8361

Exhibit received August 15, 2016

OMNI YOUTH SERVICES

210 - 212 N. WOLF ROAD
WHEELING, ILLINOIS

REVISION: DATE:

8/12/2016

SHEET TITLE:
EXISTING FLOOR PLANS

© 2016 ELA EX16PLDGS

PROJECT NO. 16005
DRAWN BY: MGL
CHECKED BY: SJE
SHEET NO. EX101
SHEET 2 OF 4

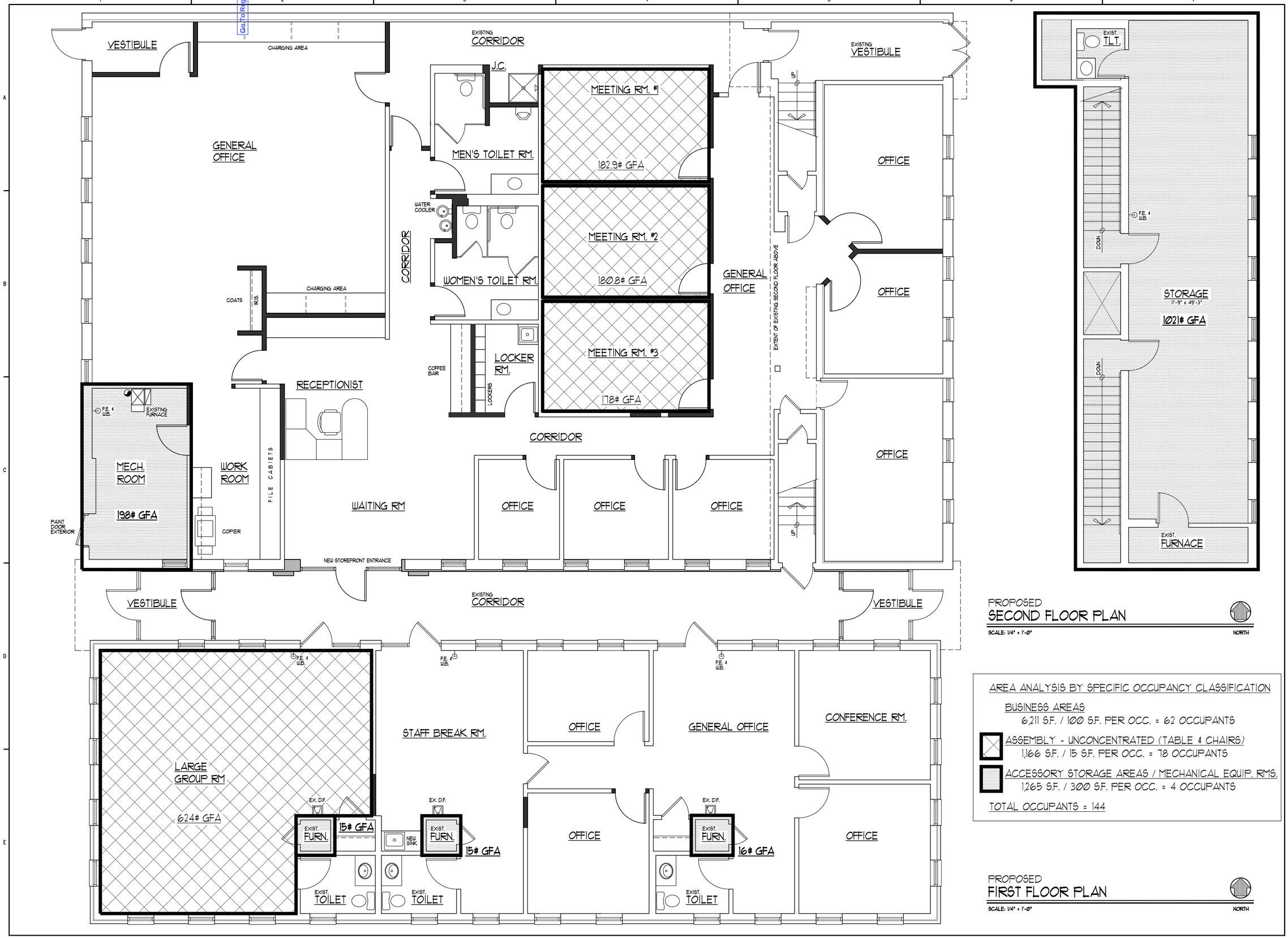

PROPOSED
SECOND FLOOR PLAN
SCALE: 1/4" = 1'-0"
NORTH

PROPOSED
FIRST FLOOR PLAN
SCALE: 1/4" = 1'-0"
NORTH

AREA ANALYSIS BY SPECIFIC OCCUPANCY CLASSIFICATION

BUSINESS AREAS
6,211 S.F. / 100 S.F. PER OCC. = 62 OCCUPANTS

ASSEMBLY - UNCONCENTRATED (TABLE & CHAIRS)
1,166 S.F. / 15 S.F. PER OCC. = 78 OCCUPANTS

ACCESSORY STORAGE AREAS / MECHANICAL EQUIP. RMS.
1,265 S.F. / 300 S.F. PER OCC. = 4 OCCUPANTS

TOTAL OCCUPANTS = 144

EHLKE LONIGRO Architects
224 S. Milwaukee Ave.-Ste. F
Wheeling, IL. 60090
Office 847.243.8360
Fax 847.243.8361

Go To Regular Site
Exhibit received August 15, 2016

OMNI YOUTH SERVICES

210 - 212 N. WOLF ROAD
WHEELING, ILLINOIS

REVISION: DATE:
8/12/2016

SHEET TITLE:
PROPOSED FLOOR PLANS

© 2016 EL-A
P:\C-AMD\DWG

PROJECT NO. 16-0005
DRAWN BY: MGL
CHECKED BY: SJE
SHEET NO. A101
SHEET 3 OF 4

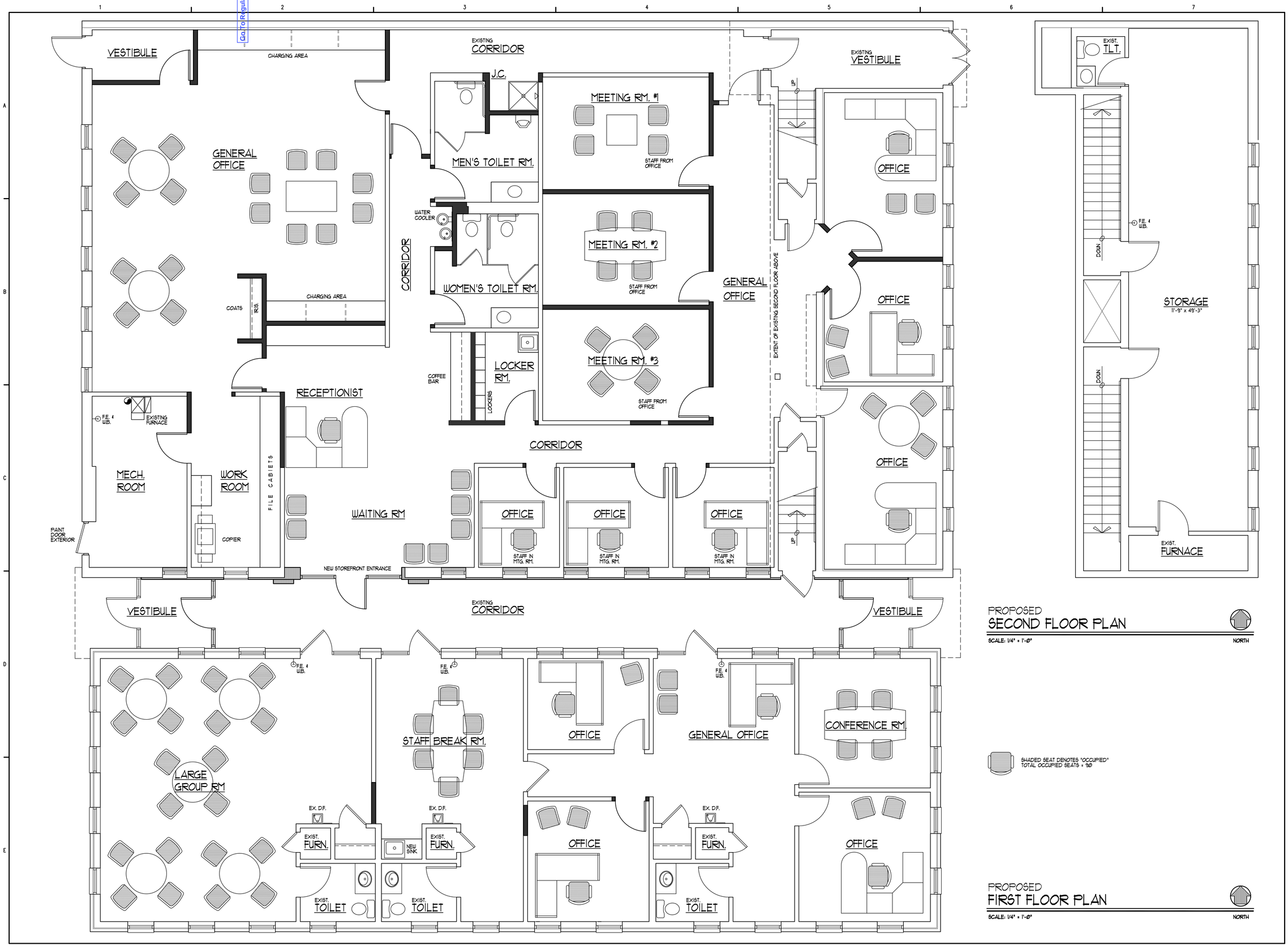

PROPOSED
SECOND FLOOR PLAN
SCALE: 1/4" = 1'-0"
NORTH

SHADED SEAT DENOTES "OCCUPIED"
TOTAL OCCUPIED SEATS = 90

PROPOSED
FIRST FLOOR PLAN
SCALE: 1/4" = 1'-0"
NORTH

EHLKE LONIGRO Architects
224 S. Milwaukee Ave.-Ste. F
Wheeling, IL. 60090
Office 847.243.8360
Fax 847.243.8361

Exhibit received August 15, 2016

OMNI YOUTH SERVICES

210 - 212 N. WOLF ROAD
WHEELING, ILLINOIS

REVISION: DATE:

8/12/2016

SHEET TITLE:
PROPOSED FLOOR PLANS W/ FURNITURE

© 2016 ELA P:\C.-A\01\DWG

PROJECT NO. 16005
DRAWN BY: MGL
CHECKED BY: SJE
SHEET NO. A101-F
SHEET 4 OF 4

Go To Regular

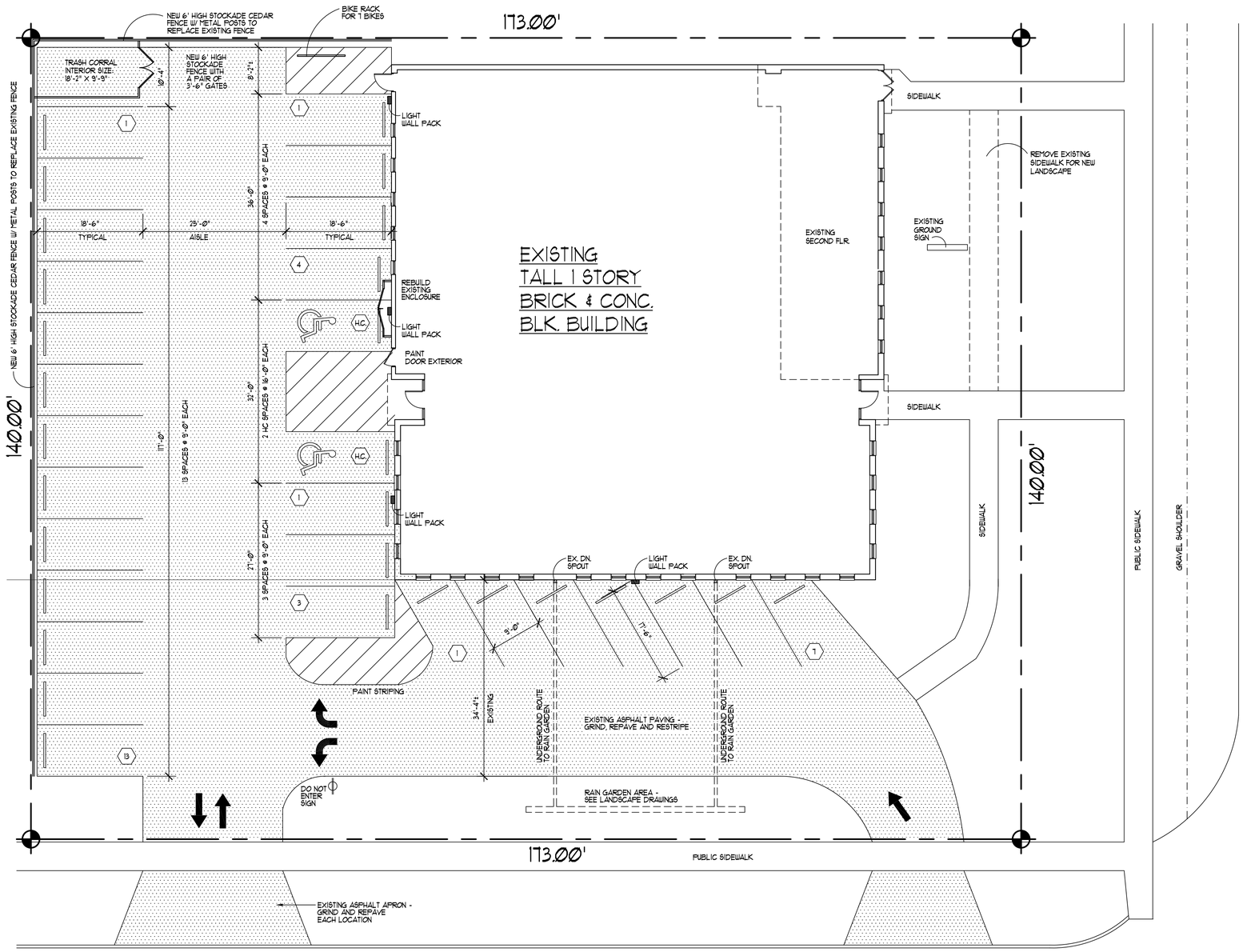

CAPRI TERRACE

0' 5' 10' 20'

PROPOSED
SITE PLAN

SCALE: 1" = 10'-0"

NORTH

ZONING DISTRICT: MXC - COMMERCIAL - RESIDENTIAL MIXED USE AREA

PARKING SPACES: 9.0' X 18.5' MINIMUM (90°)

EXISTING PARKING: 29 - REGULAR SPACES
0 - H.C. ACCESSIBLE SPACE

PROPOSED PARKING: 27 - REGULAR SPACES
2 - H.C. ACCESSIBLE SPACE

INDEX OF DRAWINGS

A001	PROPOSED SITE PLAN
EX101	EXISTING FLOOR PLANS
A101	PROPOSED FLOOR PLANS
A101-F	PROPOSED FLOOR PLANS W/ FURNITURE

EHLKE LONIGRO Architects
224 S. Milwaukee Ave.-Ste. F
Wheeling, IL. 60090
Office 847.243.8360
Fax 847.243.8361

Exhibit received August 15, 2016

OMNI YOUTH SERVICES

210 - 212 N. WOLF ROAD
WHEELING, ILLINOIS

REVISION:	DATE:

8/12/2016

SHEET TITLE: PROPOSED SITE PLAN

© 2016 ELA EHDPLDWG

PROJECT NO. 16005	SHEET NO. A001
DRAWN BY: MGL	
CHECKED BY: SJE	SHEET 1 OF 4

Regular Agenda

Luminaire Schedule / "Did you know that utility rebates can cover 25% or more of a product's cost? Email rebates@cree.com to get help on your project!"

Symbol	Qty	Label	Arrangement	Lumens/Lamp	LLF	Total Watts	Description
	1	4M-E1	SINGLE	3796	0.960	50	SEC-EDG-4M-WM-02-E-UL-SV-700 20 LED 700mA
	1	4M-E14	SINGLE	7311	0.960	93	SEC-EDG-4M-WM-04-E-UL-SV-700 40 LED 700mA
	2	4M-E16	SINGLE	10842	0.960	268	SEC-EDG-4M-WM-06-E-UL-SV-700 60 LED 700mA

Footcandles calculated using predicted lumen values after 50K hours of operation

Label	Avg	Max	Min	Avg/Min	Max/Min
CalcPts_1	1.58	9.5	0.0	N.A.	N.A.

Luminaire Location Summary

LumNo	Z	Tilt
1	14	0
2	14	0
3	11	0
4	9.5	0

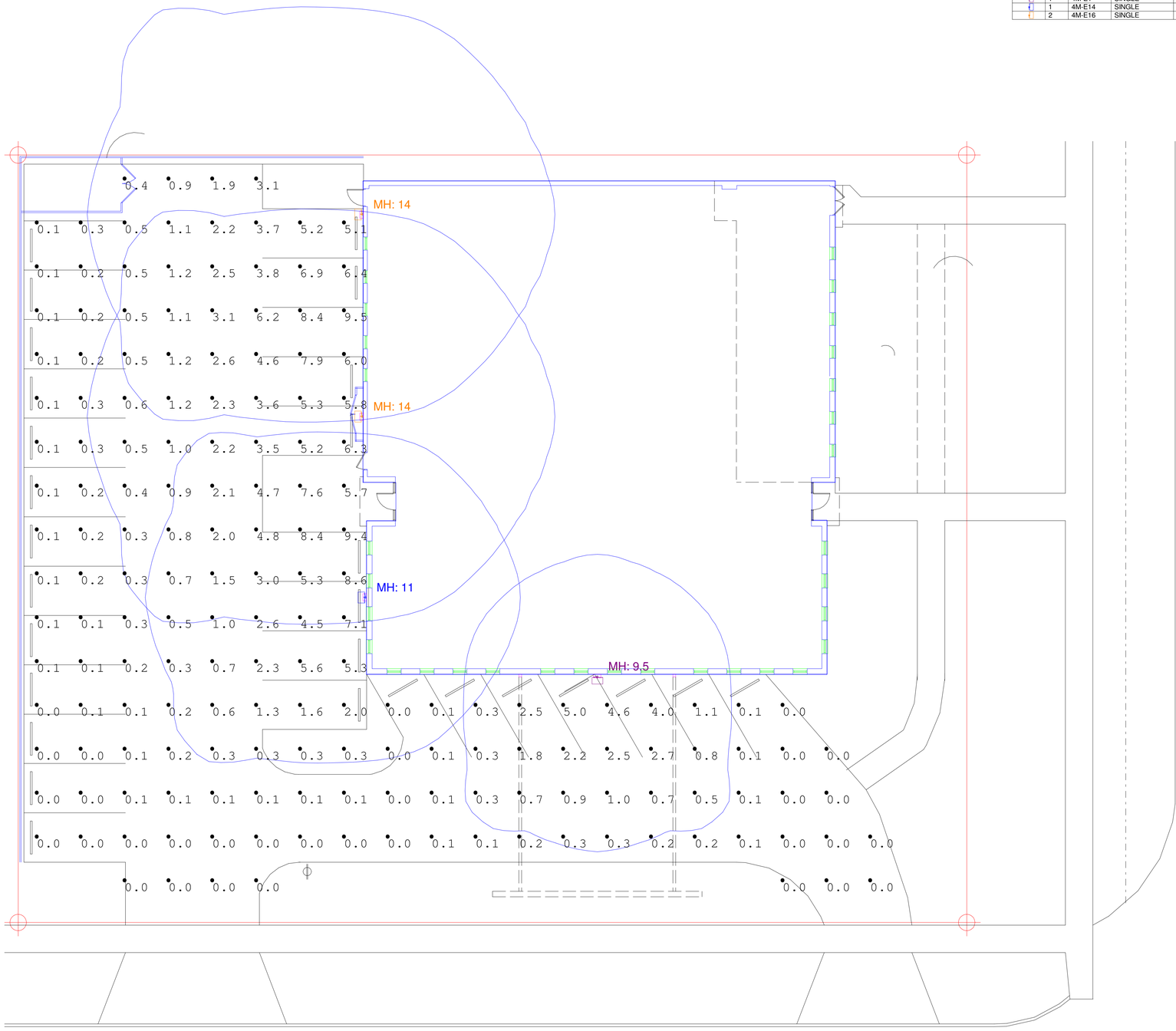

Exhibit received August 15, 2016

0 20 40

CREE™

1200 92nd Street - Sturtevant, WI 53177
www.cree.com - (800) 236-6800

Project Name: OMNI SITE | SR-16834

Date:8/15/2016 | Scale: 1"=10' | Footcandles calculated at grade

Filename: V:\Common\AppEng\OUT\160810LT1LJSR1.AGI | Layout by: LINDA SCHALLER

Illumination results shown on this lighting design are based on project parameters provided to Cree, Inc. used in conjunction with luminaire test procedures conducted under laboratory conditions. Actual project conditions differing from these design parameters may affect field results. The customer is responsible for verifying dimensional accuracy along with compliance with any applicable electrical, lighting, or energy code.

Go To Regular Agenda

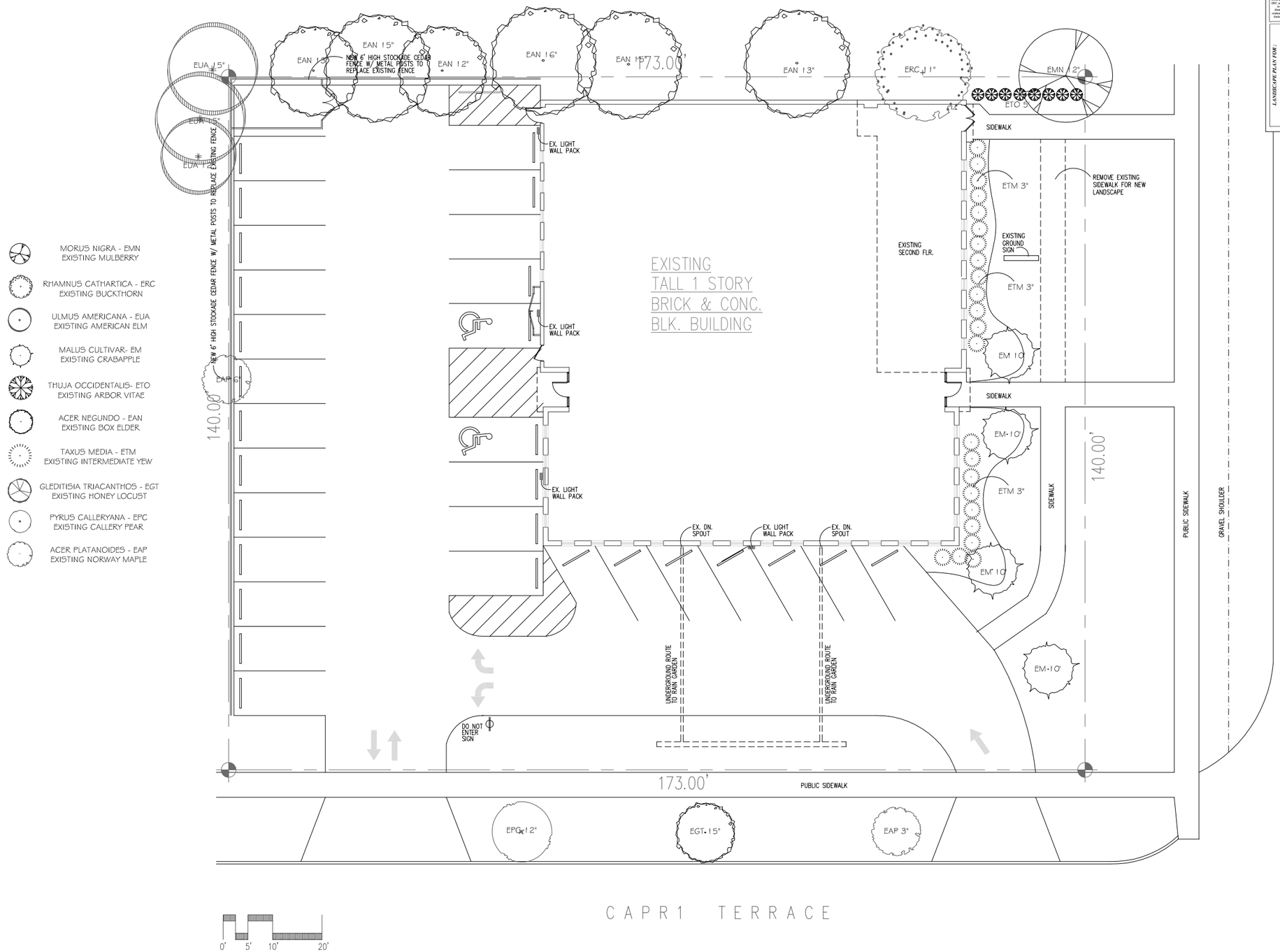

MORUS NIGRA - EMN
EXISTING MULBERRY

RHAMNUS CATHARTICA - ERC
EXISTING BUCKTHORN

ULMUS AMERICANA - EUA
EXISTING AMERICAN ELM

MALUS CULTIVAR- EM
EXISTING CRABAPPLE

THUJA OCCIDENTALIS- ETO
EXISTING ARBOR VITAE

ACER NEGUNDO - EAN
EXISTING BOX ELDER

TAXUS MEDIA - ETM
EXISTING INTERMEDIATE YEW

GLEDITISIA TRIACANTHOS - EGT
EXISTING HONEY LOCUST

PYRUS CALLERYANA - EPC
EXISTING CALLERY PEAR

ACER PLATANOIDES - EAP
EXISTING NORWAY MAPLE

EXISTING
LANDSCAPE PLAN

SCALE: 1" = 10'-0"

Exhibit received August 15, 2016

Milieu Design Inc.
Landscape Architecture
Construction
Maintenance

Milieu Design Inc.
18 East Hintz Road
Wheeling, Illinois 60090

phone: 847.541.1100 fax: 847.465.1139
email: dolan@milieudesign.com
website: www.Milieu-Design.com

This drawing and all data and design shown on it are the property of Milieu Design Inc. Plants are the property of nurseries or persons who have grown them for sale, and may be dug in fields or purchased in other nurseries. All dimensions to be verified in the field by contractor before construction. Report any discrepancies to Milieu Design Inc. Field fitting modifications as keeping with design intent.

LANDSCAPE PLAN FOR:
OMNI YOUTH SERVICES
210-212 N. WOLF ROAD
WHEELING, IL

REVISIONS

No.	Date	Revision

LANDSCAPE PLAN

Scale: AS SHOWN

Drawn By: J.J.
Date: 8-10-16
Drawing #: 1

Page #:

Go To Regular Agenda

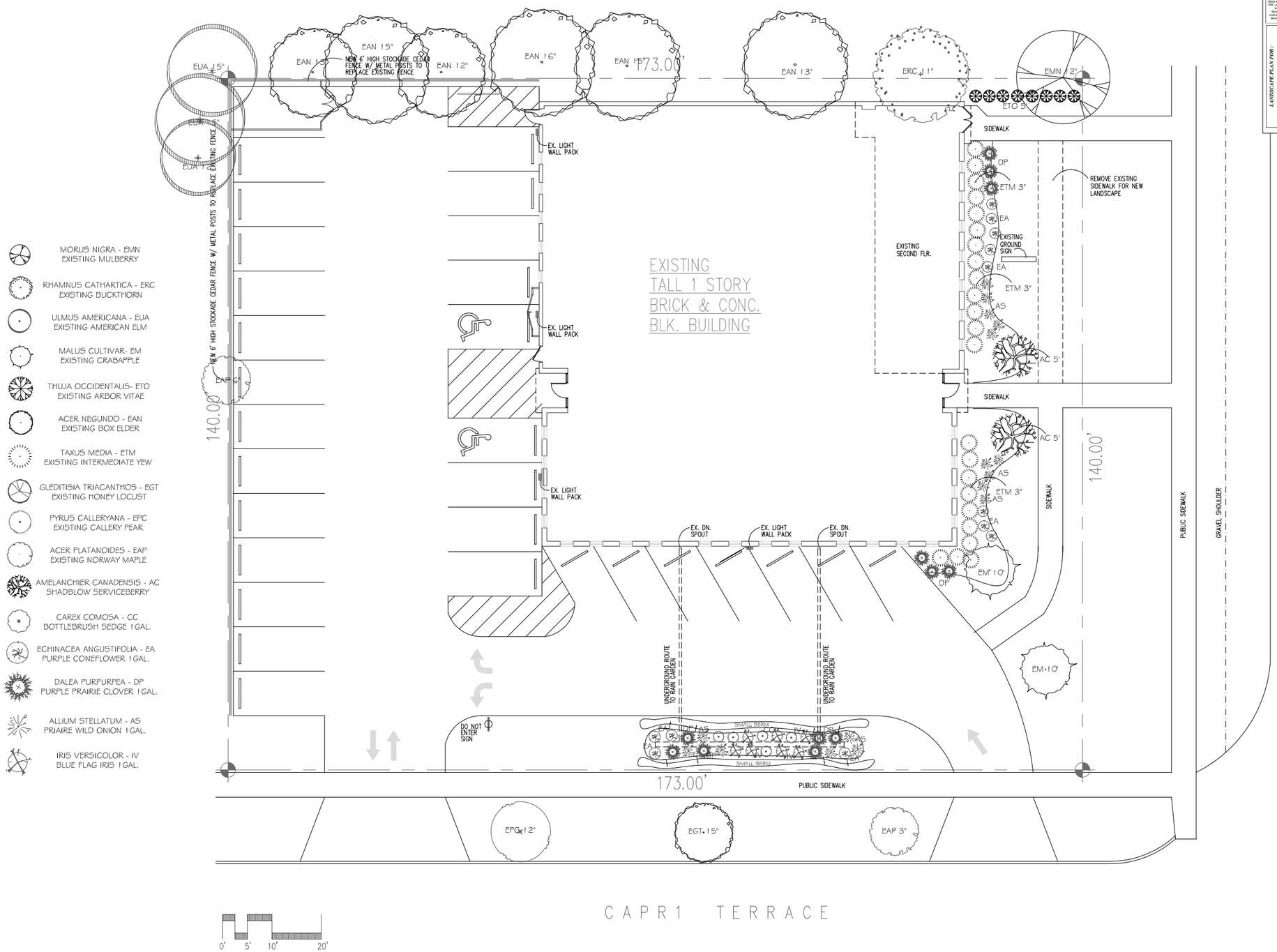

PROPOSED
LANDSCAPE PLAN
SCALE: 1" = 10'-0"

Milieu Design Inc.
Landscape Architecture
Construction
Maintenance

Milieu Design Inc.
89 East Hintz Road
Wheeling, Illinois 60090
phone: 847.483.1100 fax: 847.483.1119
email: design@milieu-design.com
www: www.milieu-design.com

This drawing and all other and all designs herein are the property of Milieu Design Inc. and are property of unlawful or per-ce to bid without written consent. All discrepancies in the work to be field verified before construction. Field changes during installation to be keeping with design intent.

LANDSCAPE PLAN FOR:
SANDY KOTTE SERVICES
CAPRI TERRACE
WOLF ROAD

REVISIONS

No.	Date	Revision

LANDSCAPE PLAN

Scale: AS SHOWN
Drawn By: J.J.
Date: 8-10-16
Drawing #: 2
Page #:

Exhibit received August 15, 2016

Go To Regular Agenda

Broadway Rack

The Broadway Rack is a great fit on Broadway or in areas where maximum security is a top priority. Made of thick, two inch square steel, the Broadway Rack renders pipe-cutters useless. The Broadway Rack also offers the aesthetic simplicity of a wave-style rack with generous spacing for easy access to bikes. Break-a-way nuts or concrete spike anti-theft hardware options are included with the Broadway Rack.

American Bicycle Security Company
P.O. Box 7359
Ventura, CA 93006
Ph: (800) 245-3723 or (805) 933-3688
Fax: (805) 933-1865
www.ameribike.com
Email: turtle@ameribike.com

Exhibit received August 15, 2016

Go To Regular Agenda

Broadway Rack

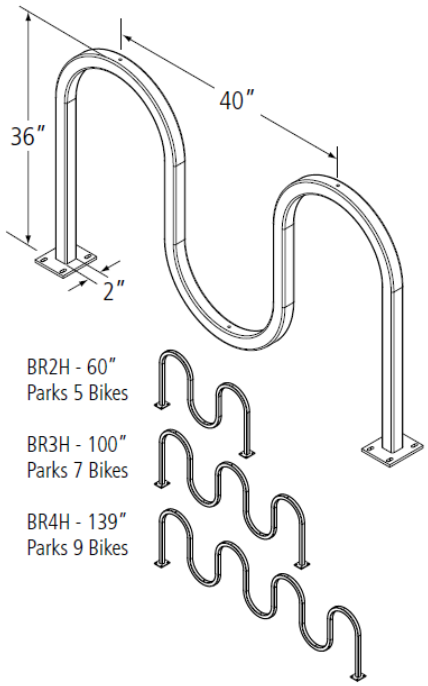

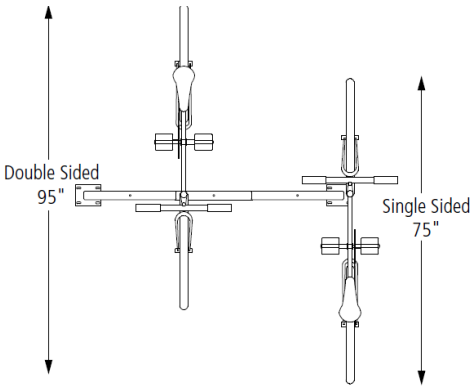

Example of rack in use

Product	Broadway Rack
Capacity	BR2H: 5 Bikes BR3H: 7 Bikes BR4H: 9 Bikes
Materials	2" OD steel square tube
Finishes	Standard options: Galvanized Or Powder Coated

RAL 9005	Flat Black	RAL 9003	RAL 2004	RAL 1023	Bright Yellow
RAL 6016	RAL 6018	RAL 6005	RAL 5005	RAL 5015	Purple
RAL 7011	RAL 7042	RAL 9007	RAL 1001	RAL 8014	Bronze
RAL 3003	RAL 3005				

Also available in Thermoplastic.

Installation Methods

In ground mount is embedded into concrete base. Specify in ground mount for this option.

Surface mount has two 5.25" x 5.5" foot plates with 4 anchors per foot. Specify foot mount for this option.

A rail mounted (freestanding) option is also available.

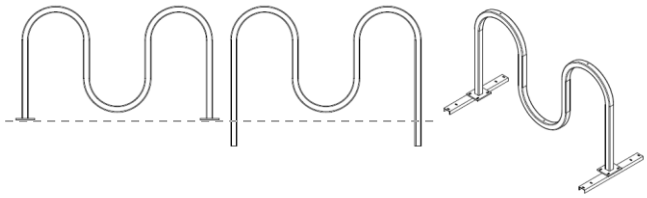

Surface Mount *In Ground Mount* *Rail Mount*

Space Use & Setbacks

Wall Setback:
A minimum of 27" should be left between the wall and the long side of the rack. 36" is the recommended setback.

Street Setback: For racks set parallel to the street, a 98" setback is recommended. For racks installed perpendicular to the street, 24" is the minimum setback. 36" is recommended.

Between Racks:
For racks set next to each other, 24" is the minimum setback. 36" is recommended.

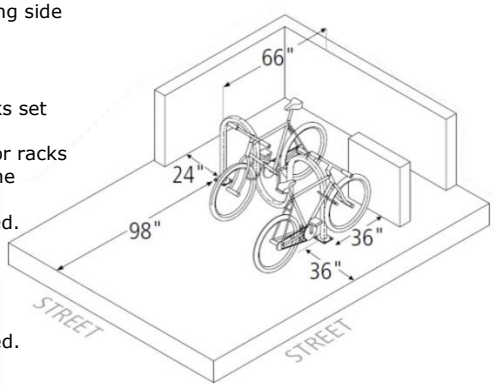

American Bicycle Security Company
P.O. Box 7359
Ventura, CA 93006
Ph: (800) 245-3723 or (805) 933-3688
Fax: (805) 933-1865
www.ameribike.com
Email: turtle@ameribike.com

Go To Regular Agenda

Broadway Rack

Surface Mounted Installation

***Tools Needed for Installation**

- Tape Measure
- Marker or Pencil
- Masonry Drill Bit
- Drill *(Hammer drill recommended)*
- Hammer
- Wrench 9/16”
- Level

Recommended Base materials:
Solid concrete is the best base material for installation. Ask your American Bicycle Security representative which anchor is appropriate for your application to ensure the proper anchors are shipped with your rack. Be sure nothing is underneath the base material that could be damaged by drilling.

Installation:
3/8” anchors are shipped with the rack. Place the rack in the desired location. Use a marker or pencil to outline the holes of the flange onto the base material. Drill the holes in accordance with the specifications shipped with the anchors. Make sure the holes are at least 6” away from any cracks in the base material.

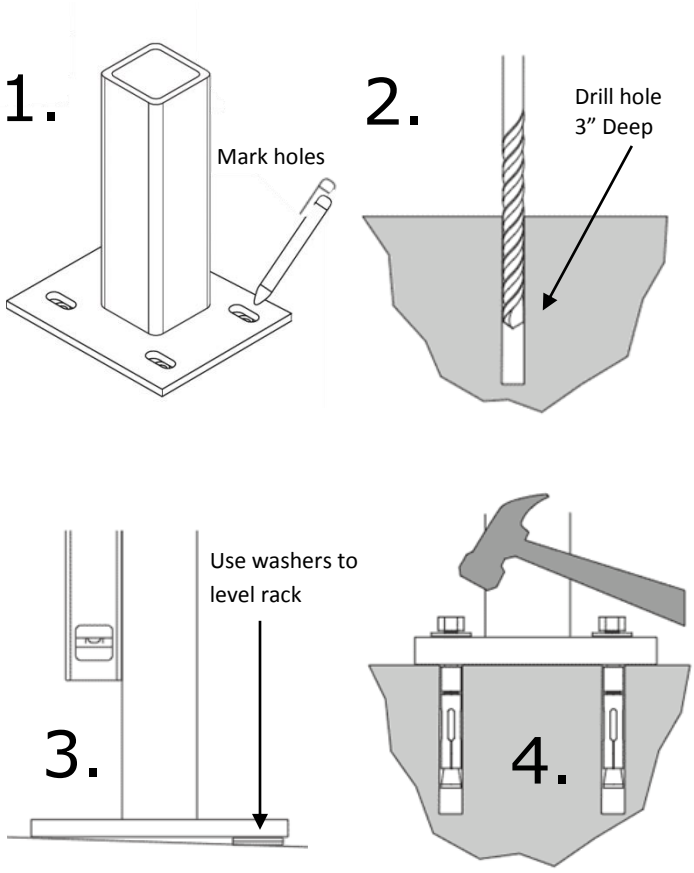

(Anchors will vary according to install surface)

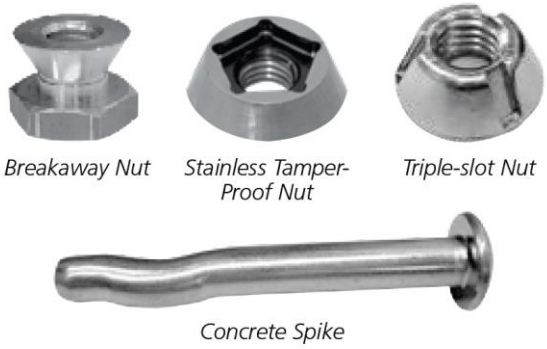

Tamper Resistant Hardware
The concrete spike is a permanent anchor. The top of the wedge anchor can also be pounded sideways after installation so that it cannot be removed. Other tamper resistant fasteners are also available for purchase.

When using the special tamper resistant nuts, always set and first tighten the anchors. Once the rack is installed, replace two nuts from the bracket (opposite sides from each other) with the tamper resistant fastener.
DO NOT OVERTIGHTEN the tamper resistant nut.

American Bicycle Security Company
P.O. Box 7359
Ventura, CA 93006
Ph: (800) 245-3723 or (805) 933-3688
Fax: (805) 933-1865
www.ameribike.com
Email: turtle@ameribike.com

Go To Regular Agenda

Broadway Rack In Ground Mounted Installation

***Tools Needed for Installation**

- Level
- Cement mixing tub
- Shovel
- Trowel
- Hole coring machine with 4” bit
- Access to water hose
- Materials to build brace

Installing into New Concrete

1.

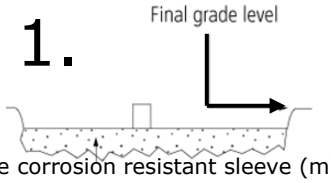

Place corrosion resistant sleeve (min. 3" inside diameter) in sand pour bed in exact location where rack will be installed. Make sure top of sleeve is at same level as desired finished concrete surface. Fill sleeve with sand to keep it in place and prevent it from filling with concrete.

2.

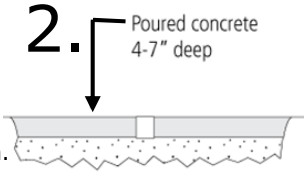

Pour concrete & allow to cure.

3.

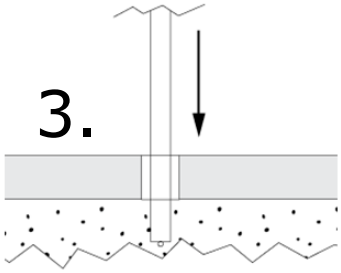

After curing, dig out sand from sleeves & insert racks, making sure they are level & at the appropriate height.

4.

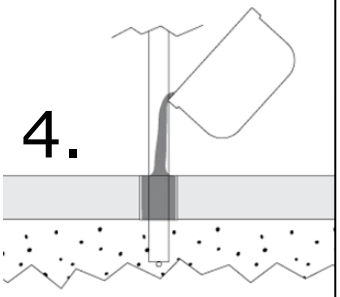

Place racks in holes, making sure it is level.

Installing into Existing Concrete

1.

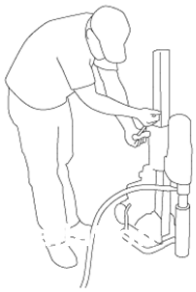

Core holes no less than 3” diameter (4”recommended) & no less than 10” deep into surface

2.

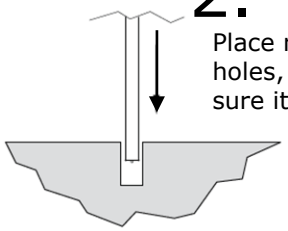

Place rack into holes, making sure it is level

3.

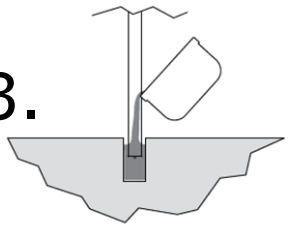

Fill holes with epoxy grout. 32” of the bike rack should remain above surface.

4.

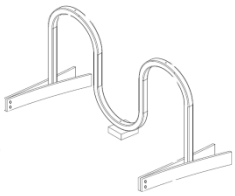

Make sure rack is level & held in place until the grout has completely set.

*An easy way to brace the rack while the grout sets is to bolt two 1x4” boards together at one end and clamp them onto the legs of the rack like a clothes pin.

American Bicycle Security Company
P.O. Box 7359
Ventura, CA 93006
Ph: (800) 245-3723 or (805) 933-3688
Fax: (805) 933-1865
www.ameribike.com
Email: turtle@ameribike.com

Go To Regular Agenda

MASTER HALCO®

A Tradition of Fencing Solutions

PostMaster® Steel Posts

Exhibit received August 15, 2016

Go To Regular Agenda

PostMaster® Delivers...

Master Halco's patented PostMaster steel post for wood fencing is engineered to provide you with the strength of steel without sacrificing the natural beauty of wood. Constructed of structural steel with a heavy galvanized coating, PostMaster can withstand high winds and heavy rain and will never rot or warp. Master Halco guarantees it - every PostMaster steel post is backed by a 15-year limited warranty.* PostMaster provides longevity and performance in a wood fence system which results in uncompromised value.

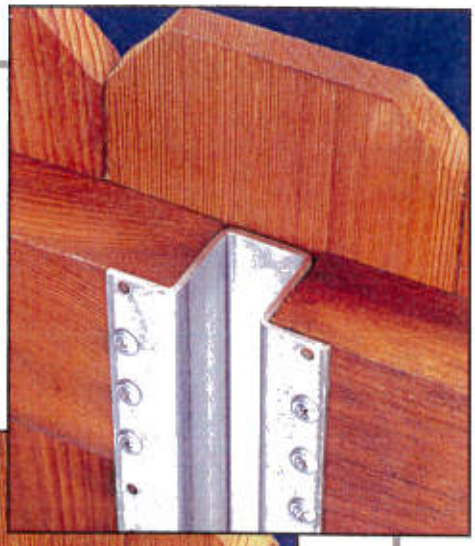

POSTMASTER by MASTER HALCO

Why use a steel post when I could use wood?

Wood posts rot over time and can warp or twist due to rain, wind or extreme temperatures. The integrity and appearance of a wood fence is lost after the wood posts begin to rot from exposure or termite infestation. This deterioration weakens the post, sometimes to the point where it can no longer hold the fence up. PostMaster gives an ordinary wood fence the strength of steel.

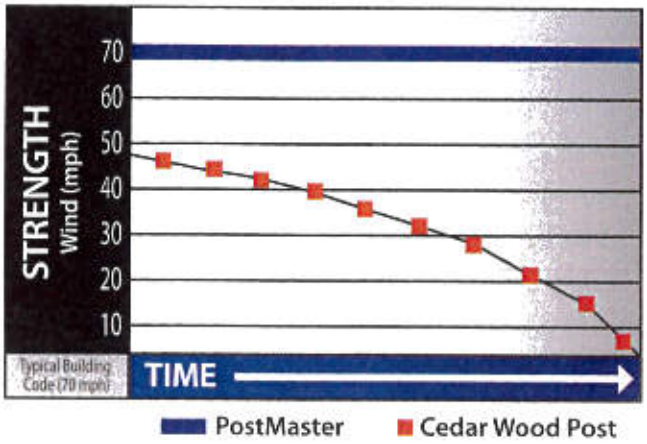

MASTER HALCO
A Tradition of Fencing Solutions

MasterHalco.com | 888-MH-Fence

*See actual warranty for details

Go To Regular Agenda

PostMaster® Works With Most Styles

Will PostMaster limit my design options?

No. You are only limited by your imagination. PostMaster can be incorporated with most wood fence styles, adding natural beauty and warmth that only a wood fence can provide. Your professional fence contractor can help you with a design that is right for you and can assure proper installation practices for your local conditions.

Privacy

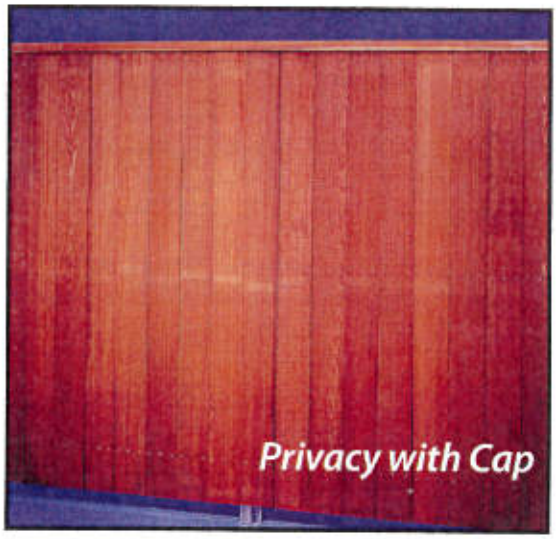
Privacy with Cap

Privacy with Lattice

Shadowbox

Rail

Go To Regular Agenda

The Strength of Steel and the Beauty of Wood

Will steel posts withstand high winds?

Yes, if properly engineered. Steel posts are available in a wide range of weights (gauges) and strengths. PostMaster® posts are designed to withstand a 70-mph wind load (6' Privacy fence with posts spaced every 8') determined in accordance with the requirements of the 1994 Uniform Building Code for exposure "B". This is the requirement for building departments in many cities. Be sure to check your local requirements and space your posts accordingly.

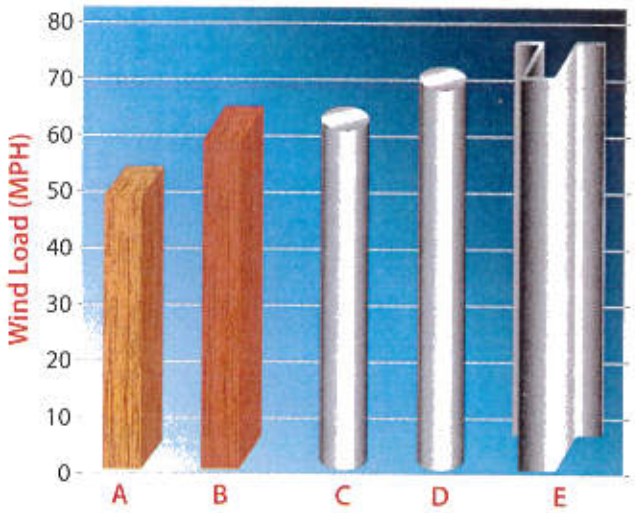

A - Cedar (4 x 4) / *49 MPH*
B - Redwood (4 x 4) / *59 MPH*
C - Tube (2-3/8 x .065) / *61 MPH*
D - Pipe (2-3/8, Sch 40) / *68 MPH*
E - **PostMaster** / *70 MPH*

Will PostMaster rust?

PostMaster's open design keeps moisture from collecting and the heavy galvanized (zinc) coating helps prevent premature rusting. PostMaster is manufactured using a steel base material conforming to the requirements of ASTM A 653, coating designation G90 galvanized (zinc) coating.

Will a steel post cause any adverse affects to the environment?

No. PostMaster is made from recycled steel. Chemically treated wood fence posts raise concerns about safety and suitability for residential use, and some warranties for chemically treated posts have exclusions for ground contact.

Is PostMaster more expensive than wood posts?

Only slightly. Good quality materials, like good workmanship, always cost a little more. While the initial cost of PostMaster may be slightly more than a wood post, and often less expensive than heavy pipe posts with brackets, the cost of future maintenance outweighs the benefits of a lower initial price.

Go To Regular Agenda

Do I have to sacrifice the look of wood?

No. PostMaster's in-line design can be easily covered or concealed with matching wood, retaining the esthetics of a wood fence. It can be finished with both sides identical - a true good neighbor fence.

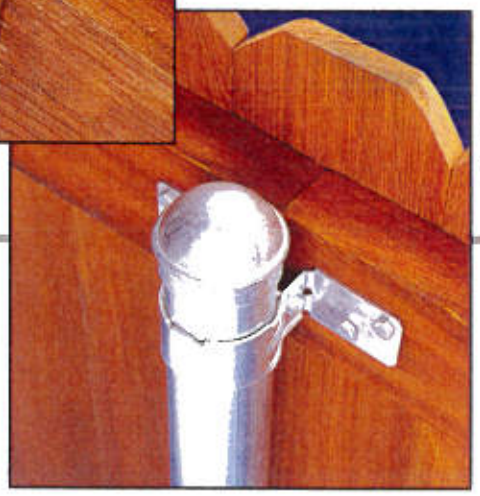

Wood fences built with steel pipe posts and brackets are unsightly because they protrude from the line of fence.

Patented

Is PostMaster hard to install?

No. Unlike most other steel posts which require brackets and/or fittings, PostMaster has pre-punched holes on each flange for attaching rails, eliminating the need for expensive brackets for most designs.

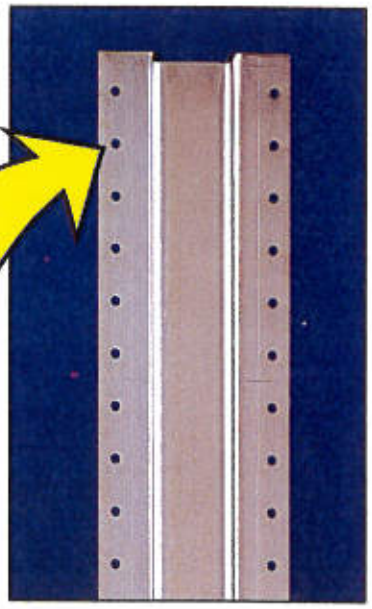

Are all product warranties the same?

A warranty is only as good as the company that stands behind it. You should understand the reputation of the company behind the warranty. PostMaster's 15-year limited warranty is as strong as the company that stands behind it.

MASTER HALCO®

A Tradition of Fencing Solutions

MasterHalco.com | 888-MH-Fence

Go To Regular Agenda

Technical Information

The Original!

POSTMASTER by MASTER HALCO

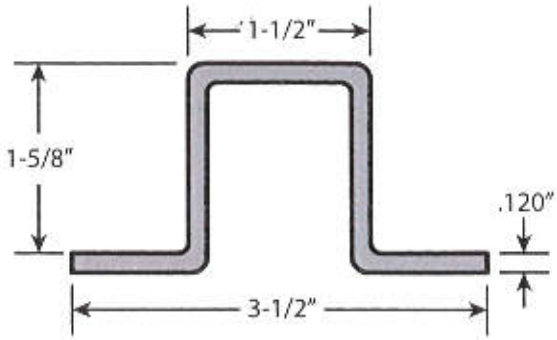

Dimensions:	3-1/2" x 1-3/4"	88.90mm x 44.45mm
Dimensions (hole):	Dia. .200" @ 1" O.C.	Dia. 5.08mm @ 25.40mm O.C.
Thickness:	.120"	3.05mm
Weight:	2.64 lbs/ft	3.93 kg/m
Material:	Galvanized (Zinc) Coated Steel	
Coating Designation:	G90	

US Patents 6,173,945 and 6,530,561

For all your fencing needs, you can trust **MASTER HALCO.**

As North America's leading manufacturer and wholesale distributor of perimeter security and fencing, we are the provider of choice for thousands of professional fence and security contractors and quality building material retailers. Since 1961, we have been the industries' premier fencing provider.

We offer a complete line of high quality fence systems in both traditional and unique styles. Our full line of products include vinyl, wood, ornamental, and chain-link fences and automated gates for residential, commercial, industrial, and high security applications.

MASTER HALCO

A Tradition of Fencing Solutions

MasterHalco.com | 888-MH-Fence

Branch service centers are located throughout North America.

Available from:

MH 046145 © 07/09

Go To Regular Agenda

VILLAGE OF WHEELING
LEGISLATIVE COVER MEMORANDUM

AGENDA ITEM NO(S): 13.F
(To be inserted by Deputy Clerk)

DATE OF BOARD MEETING: Tuesday, September 6, 2016

TITLE OF ITEM SUBMITTED: A Resolution Authorizing the Village President to Execute a Real Estate Purchase Contract (Fox Point Mobile Home Park, 573-601 S. Milwaukee Avenue)

SUBMITTED BY: Andrew C. Jennings
Director of Community Development

BASIC DESCRIPTION OF ITEM[1]: The purchase of the Fox Point parcel is the first step in a multi-step grant-funded relocation program to assist residents impacted by repetitive flood loss. Associated with the purchase contract, the Village will be entering into a management contract with the current manager to ensure continuity of services between the closing date and the completion of the relocation phase.

BUDGET[2]: Funding for the purchase is provided directly from the CDBG-DR grant. The appraisal was paid for through the Department's consulting budget.

BIDDING[3]: The contract for the appraisal was awarded through a bidding process in accordance with the grant rules. Proposals for the Phase I environmental have been solicited through an RFP, and are due on September 7th.

EXHIBIT(S) ATTACHED: Resolution
Staff memo

RECOMMENDATION: To approve.

SUBMITTED FOR BOARD CONSIDERATION: VILLAGE MANAGER

---

[1] *The purpose of the proposed item and a description of same. If the issue is site specific, such as an annexation or road improvement, a map must be attached to the memorandum.*
[2] *If applicable, provide all budgetary considerations as follows: is the item covered in the current budget; fund(s) the item is to be charged to; expenses per fund(s) and total cost; and necessary transfer(s) or supplemental appropriation(s).*
[3] *If applicable, describe the bidding process and results for purchases and contracts. If applicable, state whether or not any particular city, state or federal program was considered*

Go To Regular Agenda

VILLAGE OF WHEELING ILLINOIS

MEMORANDUM

TO: **Jon A. Sfondilis, Village Manager**

FROM: **Andrew Jennings, Director of Community Development**

DATE: **September 6, 2016**

SUBJECT: **A Resolution Authorizing the Village President to Execute a Real Estate Purchase Contract (Fox Point Mobile Home Park, 573-601 S. Milwaukee Avenue)**

EXECUTIVE SUMMARY

In October of 2015, the Village agreed to terms with Cook County to act in the role of grant subrecipient on a Community Development Block Grant Disaster Recovery (CDBG-DR) program designed to assist the residents of the Fox Point Mobile Home Park with relocating to properties that are not subject to the risks associated with repetitive flooding. The purchase of the Fox Point parcel, which is funded directly through the grant, allows the Village to access the remaining grant funds to complete the tasks associated with the relocation program.

The Village has agreed to act in the role of grant subrecipient in a CDBG-DR grant intended to assist the residents of the Fox Point Mobile Home Park relocate to properties that are not impacted by repetitive flooding. As the first step in this multi-step disaster recovery relocation program, the Village would enter into a real estate purchase contract with the current owner of the mobile home park.

The purchase price, six hundred ninety-five thousand dollars ($695,000.00), is the average of two appraisals of the property that were completed in accordance with unique appraisal rules intended to compensate the owner for the loss by determining the value of the property just prior to the flood event. In each case the value was derived from the capitalization of the rental income received from the tenants. As the number of units would be anticipated to decline over time due to unit obsolescence and the inability to replace units, the values do not reflect indefinite operation of the park.

Go To Regular Agenda

Once approved by the Village and property owner, the purchase will close following a compressed due diligence period of approximately sixty (60) days. The closing funds are to be wired directly from the grant funding source. Following closing, the Village will have access to the remainder of the grant funds, and will work with a relocation consultant to assist the families in relocating to alternative housing.

It should be noted that within the purchase contract there is an associated contract to retain the current manager of the park for the duration of the relocation phase. This is intended to ensure continuity of the services for the residents while they are working with the relocation consultant. The fee, which would be reimbursable under the grant, is derived from the monthly overhead from the current operational budget of the park management. The management contract would end once the last family is relocated from the park.

Go To Regular Agenda

RESOLUTION NO. 16-_____

A RESOLUTION AUTHORIZING THE VILLAGE PRESIDENT TO EXECUTE A REAL ESTATE PURCHASE CONTRACT (FOX POINT MOBILE HOME PARK, 573-601 S. MILWAUKEE AVENUE)

WHEREAS, the Village of Wheeling, Lake and Cook Counties, Illinois (the "Village") is a home rule municipality, pursuant to Article 7, Section 6 of the Illinois Constitution of 1970; and

WHEREAS, within the corporate boundaries of the Village there is a property known as the Fox Point Mobile Home Park, at 573-601 S. Milwaukee Avenue, Wheeling, Illinois ("Fox Point"), which is located adjacent to the Des Plaines River; and

WHEREAS, Fox Point has experienced repeated flooding from the Des Plaines River, and its residents have been burdened by the costs associated with water damage and flood loss; and

WHEREAS, the owner of Fox Point desires to sell Fox Point to the Village, and the Village desires to purchase Fox Point, using funds provided by Cook County pursuant to a "Community Development Block Grant Disaster Recovery Program Subrecipient Agreement" by and between Cook County and the Village ("Subrecipient Grant Agreement"); and

WHEREAS, the Village has agreed on the terms of the purchase of Fox Point from its owner, which includes full payment of the acquisition costs thereof from the Subrecipient Grant Agreement, as set forth in the "Real Estate Purchase Contract (Fox Point Mobile Home Park)," attached hereto as EXHIBIT A and made a part hereof ("Real Estate Purchase Contract"); and

WHEREAS, the Village Board finds that it is in the public's best interest that the Real Estate Purchase Contract in EXHIBIT A be entered into, and that Fox Point be acquired by the Village.

NOW, THEREFORE, **BE IT RESOLVED BY THE PRESIDENT AND BOARD OF TRUSTEES OF THE VILLAGE OF WHEELING, COOK AND LAKE COUNTIES, ILLINOIS,** as follows**:**

The Village President is authorized to execute the Real Estate Purchase Contract in EXHIBIT A, with such changes thereto as approved by the Village Attorney and the Village Manager. The Village President, Village Clerk, and Village Manager are directed and authorized to execute such other documents and take all other actions as may be needed to acquire Fox Point, in accordance with the terms of the Real Estate Purchase Contract.

Go To Regular Agenda

Trustee _____ moved, seconded by Trustee _____ that Resolution No. 16-_____ be adopted.

President Argiris	_____	Trustee Papantos	_____
Trustee Brady	_____	Trustee Krueger	_____
Trustee Vito	_____	Trustee Lang	_____
		Trustee Vogel	_____

Adopted this 6th day of September, 2016 by the President and Board of Trustees of the Village of Wheeling, Illinois, pursuant to a roll call vote as set forth above.

Approved by me this 6th day of September, 2016.

_____
Dean S. Argiris
Village President

ATTEST:

_____
Elaine E. Simpson, Village Clerk

Go To Regular Agenda

EXHIBIT A

REAL ESTATE PURCHASE CONTRACT
(FOX POINT MOBILE HOME PARK)

(attached)

Go To Regular Agenda

REAL ESTATE PURCHASE CONTRACT

This Real Estate Purchase Contract (the "Contract") is made and entered into as of the Effective Date, by and between Purchaser and Seller.

1. CERTAIN BASIC TERMS AND DEFINITIONS. For purposes of this Contract, the following terms shall have the following meanings:

"**Purchaser**":	Village Of Wheeling, Illinois, an Illinois home rule municipal corporation
"**Seller**":	Alpine Village Partners, an Illinois limited partnership, or Owner of Record
"**Property**":	The real property commonly known as 573-601 South Milwaukee Avenue, Wheeling, Illinois 60090 (PINs 03-12-301-012-0000 and 03-12-301-014-0000), consisting of approximately 2.58 acres of land, and all related improvements thereon. The Property is more specifically defined in Section 3, and is legally described in Exhibit A attached hereto and made a part hereof.
"**Purchase Price**":	Six Hundred Ninety Five Thousand and No/100 Dollars ($695,000.00)
"**Earnest Money Deposit**":	None
"**Effective Date**":	The later of the date the Contract has been executed by Purchaser or by Seller.
"**Investigation Period**":	The earlier of sixty (60) calendar days after the Effective Date or the date the Purchaser informs the Seller that the Investigation Period has closed.
"**Title and Survey Comment Deadline**":	Twenty (20) business days after the later of Purchaser's receipt of the: (a) Survey (as defined in Section 8.2 below), or (b) the Title Commitment (as defined in Section 8.1 below).
"**Closing Date**":	Within thirty (30) calendar days after the end of the Investigation Period.
"**Addresses for Notice to Purchaser**":	Village of Wheeling 2 Community Boulevard Wheeling, IL 60090 Attn: Andrew Jennings, Director of Community Development Phone: 847/499-9061 Fax: 847/459-2620

Go To Regular Agenda

Email: ajennings@wheelingil.gov

And a copy to Attorney:

Klein, Thorpe & Jenkins, Ltd.
20 N. Wacker Drive, Suite 1660
Chicago, Illinois 60606
Attn: James V. Ferolo / Gregory T. Smith
Phone: 312/984-6400
Fax: 312/984-6444
Email: jvferolo@ktjlaw.com / gtsmith@ktjlaw.com

"**Addresses for Notice to Seller**": Alpine Village Partners
400 Lake Cook Road, Suite 112
Deerfield, Illinois 60015
Attn: Lawrence Fischer
Phone: 847-948-9400/cell 847-867-7098
Fax: 847-948-9412
Email: LFischer@reip.com

"**Seller's Broker**": None

"**Purchaser's Broker**": None

"**Escrow Agent and Title Company**": Chicago Title Insurance Company

2. EXHIBITS. The following exhibits attached hereto are, by this reference, incorporated herein:

Exhibit A – Legal Description of Property

Exhibit B – Real Estate Disclosure Affidavit

Exhibit C – Seller's Deliveries

Exhibit D – Mobile Home Park Management Contract

3. SALE AND PURCHASE; DESCRIPTION OF THE PROPERTY; FUNDING AGREEMENT; SETTLEMENT AGREEMENTS; PROPERTY MANAGEMENT; RELOCATION.

3.1 Agreement to Purchase and Sell. Seller agrees to sell, and Purchaser agrees to purchase from Seller, the Property, upon the terms and conditions contained

Go To Regular Agenda

in this Contract. The Property includes the Land (as defined in Section 3.2 below), improvements thereon and the Intangible Property (as defined in Section 3.3 below).

3.2 Land. The term "Land" shall mean fee simple title to the real property legally described in Exhibit A shall be substituted for that in Exhibit A), together with: (a) all rights, whether or not of record, appurtenant to the Land; and, (b) all tenements, hereditaments, privileges, and appurtenances in any way belonging or appertaining to the Land, including all mineral, oil, gas, and other hydrocarbon substances on and under the Land.

3.3 Intangible Property. The term "Intangible Property" shall mean all public or private, recorded or unrecorded permits, approvals, licenses, rights, certificates of occupancy, development rights, air, view or water rights, trade names, intellectual property rights, contractor or manufacturer warranties, and all other intangible property relating to the use, maintenance, or operation of the Property, if and to the extent that such Intangible Property applies to the Land. Intangible Property does not include any service or vendor contracts with respect to the Property, all of which shall be terminated by Seller as of the Closing Date, unless otherwise agreed by the parties in writing.

3.4 Funding Agreement. The Purchase Price shall be paid with funds available to the Purchaser pursuant to the "COMMUNITY DEVELOPMENT BLOCK GRANT DISASTER RECOVERY PROGRAM SUBRECIPIENT AGREEMENT (VILLAGE OF WHEELING – FOX POINT MOBILE HOME PARK)," by and between Purchaser and Cook County, with an effective date of _____ __, 2016 (the "Funding Agreement"). In the event of any conflict between any term of this Contract and the Funding Agreement, the terms of the Funding Agreement shall control. The Purchaser's obligations under this Contract are limited as set forth in the Funding Agreement, and the Purchaser's obligations are limited to the extent sufficient funds are available to Purchaser under the Funding Agreement to pay Seller the Purchase Price.

3.5 Settlement Agreements. This Contract is entered pursuant to the agreements of the Seller and Purchaser as set forth in the "SETTLEMENT AGREEMENT AND RELEASE OF ALL CLAIMS RELATING TO THE FOX POINT MOBILE HOME PARK (VILLAGE, ALPINE AND NON-PLAINTIFFS)," with an effective date of _____ __, 2016 (the "Non-Plaintiff Settlement Agreement"), and the "SETTLEMENT AGREEMENT AND RELEASE OF ALL CLAIMS RELATING TO THE FOX POINT MOBILE HOME PARK (VILLAGE, ALPINE AND PLAINTIFFS)," with an effective date of _____ __, 2016 (the "Plaintiff Settlement Agreement"). Collectively the Non-Plaintiff Settlement Agreement and the Plaintiff Settlement Agreement are the "Settlement Agreements"). In the event of any conflict between any term of this Contract and the Settlement Agreements, the terms of the Settlement Agreements shall control. The Purchaser's obligations under this Contract are limited as set forth in the Settlement Agreements. In the event of any conflict between any term of the Settlement Agreements and the Funding Agreement, the terms of the Funding Agreement shall control.

3.6 Property Management Before Closing. During the period between the Effective Date and the Closing, the Seller shall act as property manager for the Property, and the Seller shall take all steps necessary to keep the Property in good and

Go To Regular Agenda

customary operating order and repair. The Seller shall maintain and operate the Property in the ordinary course of its business, and shall collect rent and maintain the Property.

3.7 Mobile Home Park Closure Notice. Seller shall send the twelve (12) month park closure notice set forth in 765 ILCS 745/8.5 to all tenants on the Property at least seven (7) days prior to the Closing, and Seller shall provide proof to Purchaser at least three (3) days prior to the Closing that the notices were sent and served as required by 765 ILCS 745/8.5.

3.8 Property Management After Closing. Prior to the Closing, the Seller has executed the "Mobile Home Park Management Contract" in Exhibit D attached hereto and made a part hereof (the "Management Contract"). After the Closing, the Seller shall perform its obligations under the Management Contract, which include, but are not limited to, operating the Property in the ordinary course of its business, collecting rent, and conducting maintenance on the Property.

4. [INTENTIONALLY OMITTED]

5. PURCHASE PRICE. If the Closing (as defined in Section 8.4 below) occurs under the terms and conditions of this Contract, the Purchase Price will be paid by Purchaser to Seller, either by wire transfer of funds or certified or cashier's check, plus or minus prorations, at the Closing. At the Closing, the Village shall be paid by Seller the amount of any payment(s) made by the Village pursuant to Section 4 of the Plaintiff Settlement Agreement.

6. SELLER'S DELIVERIES. Not later than twenty (20) business days after the Effective Date, or as otherwise required in this Contract, Seller shall deliver to Purchaser each of the items listed on Exhibit C ("Seller's Deliveries").

7. PURCHASER'S INVESTIGATION.

7.1 Purchaser's Right to Investigate. During the Investigation Period, Purchaser will have the right, but not the obligation, to investigate the feasibility of the Property for Purchaser's intended use, which is anticipated to be open lands, including but not limited the conduct of such tests, assessments, studies, and interviews as Purchaser deems necessary ("Purchaser's Investigation"). Purchaser's Investigation will be carried out during reasonable hours and upon reasonable notice to Seller, and, except as expressly provided in this Contract, shall be performed at Purchaser's sole cost and expense.

7.2 Purchaser's Right to Enter. Seller hereby grants to Purchaser, its agents, representatives, and contractors the right to enter upon the Property to conduct Purchaser's Investigation. Purchaser will promptly repair any physical damage to the Property caused by Purchaser's Investigation and will promptly remove, bond over, or insure over any mechanic's liens arising from the work performed to complete Purchaser's Investigation.

7.3 Waiver or Termination. At any time prior to the end of the Investigation Period, Purchaser may give written notice to Seller to: (a) waive Purchaser's

Go To Regular Agenda

Investigation; or (b) terminate this Contract if the Purchaser, in its sole discretion, is not satisfied that the Property can be used safely by the public for its anticipated use as open space, or because the Property does not qualify for acquisition under the Funding Agreement; provided that if Purchaser fails to give such notice, Purchaser will be deemed to have accepted the condition of the Property.

8. TITLE AND SURVEY.

8.1 Title Commitment. Within five (5) business days of the Effective Date, Seller shall order from Title Company, at Seller's sole cost and expense, a commitment for an owner's policy of title insurance for the Property (the "Title Commitment") in the amount of the Purchase Price showing title to the Property vested in Seller, and naming Purchaser as the proposed insured, providing extended coverage over the standard exceptions, together with legible copies of all underlying title documents and plats listed in the Title Commitment (the "Underlying Title Documents").

8.2 Survey. Within thirty (30) days after the Effective Date, Seller, at Seller's cost and expense, shall acquire a current dated survey of the Property (the "Survey"), prepared by a surveyor licensed by the State of Illinois, certified to Purchaser, the Title Company, Purchaser's attorney and such other parties as Purchaser may designate, by such surveyor as being true, accurate and having been prepared in compliance with the "Minimum Standard Detail Requirements for ALTA/ACSM Real Estate Title Surveys" adopted by the American Real Estate Title Association and American Congress on Surveying and Mapping in 2011 setting forth: (i) the legal description of the Property; (ii) all boundaries, courses and dimensions of the Property; (iii) all easements, building lines, curb cuts, sewer, water, electric, gas and other utility facilities (together with recording information concerning the documents creating any such easements and building lines); (iv) adjoining roads and rights of way and means of ingress and egress to and from the Property to a public road; (v) the square footage of the Property including acreage; and (vi) all Improvements located on the Property. The Survey shall reveal no encroachments onto the Property from adjacent property, and no encroachments by or from the Property of Improvements onto any adjacent property. The Survey shall indicate all flood zone map designations applicable to the Property, including the following Table A items: 1, 2, 3, 4, 5, 6, 7(a), 7(c), 8, 11(b), 12, 13, 18, and 19. The Purchaser's right to object to Survey defects is set forth in Section 8.3 below. Prior to Seller ordering the Survey, Seller shall provide Purchaser with the estimate of cost of the Survey, which Purchaser shall review and approve or deny.

Upon approval of the Survey, the legal description in Exhibit A shall be automatically revised to be that of the legal description in the Survey and Title Commitment, if necessary. At either Party's request, any changes to the legal description shall be confirmed in writing signed by both Parties.

8.3 Title and Survey Objections. Prior to the Title and Survey Comment Deadline, Purchaser will notify Seller of any liens, encumbrances, and other matters described in the Title Commitment, Title Documents, and Survey (if obtained by Purchaser) which are unacceptable to Purchaser (such matters, the "Unpermitted Matters"; such notice, the "Objection Notice"). Any liens, encumbrances, and other

matters described in the Title Commitment, Title Documents, and Survey, to which Purchaser does not object prior to the Title and Survey Comment Deadline will be deemed to be acceptable to Purchaser (the "Permitted Matters"), provided, however, that Purchaser shall have the continuing right to give Seller written notice of any additional matters appearing in any subsequent updates to the Title Commitment or Survey. Seller shall, within five (5) business days after Seller's receipt of any Objection Notice (the "Objection Cure Deadline"), to remove such Unpermitted Matters or remedy same in a manner satisfactory to Purchaser in its sole and absolute discretion. Seller shall cure of any Unpermitted Matters. If Seller fails or is unable to cure any such Unpermitted Matters or remedy same in a manner satisfactory to Purchaser, Purchaser will have the option, exercisable in its sole discretion to either: (a) proceed with this Contract, in which event Purchaser will have the right to deduct from the Purchase Price an amount necessary to cure all monetary liens and encumbrances of a definite or ascertainable amount; or (b) terminate this Contract. Purchaser will exercise one of these options by providing written notice thereof to Seller on or before the Closing Date, and, if Purchaser fails to provide such notice within such time, then Purchaser will be deemed to have elected to purchase the Property in accordance with the terms of this Contract.

8.4 Title Policy. The closing (the "Closing") shall occur on or before the Closing Date. At the Closing, and as a further condition precedent to Purchaser's obligations under this Contract, Title Company shall deliver to Purchaser an owner's title policy or marked-up title commitment, in the amount of the Purchase Price and otherwise in compliance with the Title Specifications, dated as of the time of recording of the Deed (as defined in Section 16.2.1 below) and subject only to the Permitted Matters (the "Title Policy"). The Title Policy shall provided extended coverage over any standard exceptions shown on the Title Commitment.

9. OPERATION OF PROPERTY.

9.1 Negative Covenants. Seller covenants and agrees with Purchaser that, from the Effective Date through Closing, Seller will not: (a) transfer any part of the Property; (b) create on the Property any easements, leases, claims, or other interests; (c) permit any changes to the zoning classification of the Property; or (d) market the Property for sale or lease or otherwise accept or negotiate any offers for sale or lease.

9.2 Affirmative Covenants. Seller covenants and agrees with Purchaser that, from the Effective Date through Closing, Seller will: (a) promptly furnish to Purchaser copies of all notices of violation by Seller or the Property of Federal, State, County, or local government laws, ordinances, regulations, orders, or requirements and promptly comply with the same; (b) continue to operate, insure, maintain and repair the Property in the same manner as existing on the date hereof; (c) keep the property in compliance with all applicable federal, state, regional, county and local laws concerning the health and safety of the public and with all Environmental Laws.

10. CONDITIONS PRECEDENT TO CLOSING.

10.1 Closing Conditions. Notwithstanding anything in this Contract to the contrary, Purchaser's obligation to consummate the purchase of the Property is

Go To Regular Agenda

expressly contingent upon the satisfaction of the following conditions ("Purchaser's Closing Conditions"):

10.1.1 There has been no material adverse change in the condition of the Property from its condition as of the end of the Investigation Period.

10.1.2 All representations and warranties of Seller under this Contract continue to be true and correct as of the Closing Date.

10.1.3 Title Company is prepared to issue the Title Policy.

10.1.4 There are adequate funds available pursuant to the Funding Agreement to pay the Purchase Price for the Property.

10.1.5 Seller shall have executed the Management Contract.

10.1.6 Seller shall have sent the twelve (12) month park closure notice set forth in 765 ILCS 745/8.5 to all tenants on the Property at least seven (7) days prior to the Closing, and Seller shall provide proof to Purchaser at least three (3) days prior to the Closing that the notices were sent and served as required by 765 ILCS 745/8.5.

10.2 Waiver or Termination. If any of Purchaser's Closing Conditions are not satisfied on or prior to Closing, Purchaser may, by delivering written notice to Seller, elect to either: (a) waive any such condition; or (b) terminate this Contract. If Purchaser elects to waive any such condition, the parties will proceed to Closing, in which event Purchaser will have the right to deduct from the Purchase Price the amount of any monetary lien or encumbrance.

11. REPRESENTATIONS AND WARRANTIES.

11.1 Seller's Representations and Warranties. Seller represents and warrants to Purchaser as follows (collectively, "Seller's Warranties"):

11.1.1 Seller is the sole owner of fee title of the Property.

11.1.2 Seller has full power and authority to enter into this Contract, bind Seller and the Property to the commitments made hereunder, and convey or cause the conveyance of the Property to Purchaser.

11.1.3 The execution, delivery, and performance by Seller of this Contract will not constitute or cause a default or breach of any agreement or undertaking of Seller or concerning the Property.

11.1.4 Seller has no knowledge and has received no written notice of any claim, demand, damage, action, or cause of action of any person, entity, or governmental agency or instrumentality affecting the

Go To Regular Agenda

Property other than the claims referred to in the Settlement Agreements.

11.1.4 No person or entity, except Purchaser, currently has any right (including options to purchase and rights of first refusal to purchase) to purchase the Property.

11.1.5 Seller has no knowledge of and has received no written notice concerning any existing or proposed special assessments or similar taxes, charges, or assessments against the Property, or any utility service moratoriums or other moratoriums affecting the Property.

11.1.6 To the best of Seller's knowledge, the Property is not in violation of any law, ordinance, code, regulation.

11.1.7 To the best of Seller's knowledge, there are no unrecorded leases, equipment leases, development agreements, or other agreements affecting the Property which will affect the Property following Closing. All management agreements affecting the Property will have been terminated, as of the Closing Date.

11.1.8 At Closing, there will be no unpaid bills or claims in connection with any work by or on behalf of Seller on the Property. To the best of Seller's knowledge, there has not been any work performed or materials supplied to the Property or contracts entered into for work to be performed or materials to be supplied to the Property prior to the date hereof that has not been, or at the Closing will not be, fully paid for.

11.1.9 Seller has no knowledge of and have received no notices of: (i) the presence of any Hazardous Material (as defined in Section 11.2 below) on, under or in the Property; (ii) any spills, releases, discharges, or disposal of Hazardous Materials that have occurred or are presently occurring on or onto the Property; (iii) any spills or disposal of Hazardous Materials that have occurred or are occurring off the Property as a result of any construction on, or operation and use of the Property; (iv) the presence of any equipment on the Property containing polychlorinated biphenyls; or (v) the presence of any asbestos in use or on the Property.

11.1.10 Seller represents that to the best of its knowledge and belief: (i) the Property has never been used and will not be used before the Closing as a landfill, open dump or a waste dump, or for any activities involving, directly or indirectly, the use, generation, treatment, storage or disposal of any hazardous or toxic chemical material substance or waste; (ii) the Property does not contain underground storage tanks or Hazardous Materials; and (iii) the Seller has received no notice of nor does the Property violate any Environmental Laws.

Go To Regular Agenda

11.1.11 The sewage treatment facility on the Property has been operated in compliance with all Federal, State, and local laws, ordinances, and regulations, and Seller is unaware of any potential, alleged, or actual violations of Federal, State, and local laws, ordinances, or regulations regarding the sewage treatment facility on the Property.

11.2 "Hazardous Material" shall mean any substance, chemical, element, compound, chemical mixture, product, solid, gas, liquid, waste, byproduct, pollutant, waste, contaminant or material which is defined, determined or identified as hazardous or toxic under Environmental Laws or the Release of which is regulated under Environmental Laws, and includes, without limitation, (a) asbestos, polychlorinated biphenyls and petroleum (including crude oil or any fraction thereof) and (b) any such material classified or regulated as "hazardous" or "toxic" pursuant to the Comprehensive Environmental Response, Compensation and Liability Act of 1980, as amended by the Superfund Amendments and Reauthorization Act of 1986, 42 U.S.C. §§9601 *et seq.*, Solid Waste Disposal Act, as amended by the Resource Conservation and Recovery Act of 1976 and Hazardous and Solid Waste Amendments of 1984, 42 U.S.C. §§6901 *et seq.*, Federal Water Pollution Control Act, as amended by the Clean Water Act of 1977, 33 U.S.C. §§1251 *et seq.*, Clean Air Act of 1966, as amended, 42 U.S.C. §§7401 *et seq.*, Toxic Substances Control Act of 1976, 15 U.S.C. §§2601 *et seq.*, or Hazardous Materials Transportation Act, 49 U.S.C. App. §§1801 *et seq.*

11.3 Purchaser's Representations And Warranties. Purchaser represents and warrants to Seller that:

11.3.1 Purchaser has the power and authority to execute and deliver this Contract and to perform its obligations hereunder pursuant to its home rule authority granted by Article 6 Section VII of the Illinois Constitution.

11.3.2 The execution of this Contract by Purchaser is the duly authorized and legally binding action of Purchaser, and upon execution hereof, Purchaser will be bound by and subject to the terms and provisions of this Contract.

12. SURVIVAL OF REPRESENTATIONS AND WARRANTIES. The representations and warranties of the parties contained in this Contract or in any document, certificate, or other instrument, given or delivered to the other party pursuant to this Contract, will: (a) be continuing representations and warranties; (b) be deemed to be remade at Closing; (c) not merge with or into any deed of conveyance or other document or instrument delivered at or in connection with the Closing; and (d) survive the Closing for a period of five (5) years. The Purchaser and Seller hereby agree to indemnify, defend, and hold harmless the other party and their respective successors and assigns, from and against all claims, liabilities, damages, losses, costs, and expenses, including reasonable attorneys' fees and court costs, resulting from or in connection with any misrepresentation or breach of warranty made by the indemnifying party in this Contract

Go To Regular Agenda

or in any document, certificate, or other instrument given or delivered to the other party pursuant to this Contract.

13. SALE COMMISSION.

13.1 Seller's Broker. Seller represents and warrants to Purchaser that Seller has not dealt with any broker in connection with this Contract and no person or entity acting as real estate broker, finder, or agent negotiated this Contract on Seller's behalf or is entitled to any commission by reason of its representation of Seller in connection with this Contract. Seller will indemnify, defend, and hold Purchaser harmless from and against any claims for a fee or commission made by any broker claiming to have acted by or on behalf of Seller in connection with this Contract.

13.2 Purchaser's Broker. Purchaser represents and warrants to Seller that Purchaser has not dealt with any broker in connection with this Contract and no person or entity acting as real estate broker, finder, or agent negotiated this Contract on Purchaser's behalf or is entitled to any commission by reason of its representation of Purchaser in connection with this Contract. Purchaser will indemnify, defend, and hold Seller harmless from and against any claims for a fee or commission made by any broker claiming to have acted by or on behalf of Purchaser in connection with this Contract.

14. CONDEMNATION. If, prior to the Closing, there occurs a condemnation or other taking of the Property, or any part of the Property, or any rights of access or other rights benefiting the Property as a result of the exercise of the power of eminent domain, or in the event that any type of proceeding for such a condemnation or taking is commenced prior to the Closing by any governmental body except for the Village of Wheeling, then Seller will immediately notify Purchaser and Purchaser will have the option to either (a) terminate this Contract, and neither party will have any further obligations or liabilities hereunder; or (b) proceed with the Closing, in which event (i) if the taking is consummated prior to the Closing, the Purchase Price will be reduced by the amount of the award received by Seller as a result of the taking, or (ii) if the taking is not consummated prior to the Closing, Seller will assign to Purchaser all right, title, and interest, in and to the condemnation proceeds and awards, and Purchaser will have the sole and exclusive right to negotiate, contest, and settle all such eminent domain proceedings. Purchaser will exercise its option under this Section 14 by providing Seller with a written notice of its decision within thirty (30) days after Purchaser receives from Seller written notice of the proposed condemnation or taking, together with such additional information concerning the proposed condemnation or taking as Purchaser may reasonably request, and the Closing Date will be extended, if necessary, to permit Purchaser to make such election within such time period.

Go To Regular Agenda

15. **CASUALTY.** If damage to the Property occurs prior to the Closing, Seller will immediately notify Purchaser in writing, and if the cost to repair the damage exceeds $10,000 (as determined by an independent insurance adjuster selected by Purchaser and approved by Seller), Purchaser will have the option to either: (a) terminate this Contract, and neither party will have any further obligations or liabilities hereunder; or (b) proceed with the Closing. If Purchaser is not entitled to terminate or elects not to terminate this Contract under this Section 15, then Seller will pay over and assign to Purchaser all insurance proceeds payable as a result of the damage to the Property (including all casualty insurance proceeds, and all rent loss insurance proceeds applicable to the period on or after the Closing Date) and, in addition thereto, will pay to Purchaser at Closing an amount equal to all deductibles and other uninsured costs with respect to such damage.

16. **CLOSING.**

16.1 Time and Place of Closing. The transaction contemplated by this Contract will be consummated on the Closing Date, except that: (a) Purchaser may elect to close at an earlier date by providing written notice thereof to Seller at least five (5) days prior to the date Purchaser desires to close; and (b) the parties may mutually agree to adjust the Closing Date to an earlier or later date. The Closing will take place at the office of the Escrow Agent in the City of Chicago.

16.2 Seller's Closing Deliveries. Seller will deliver to Purchaser at Closing the following, all in form and substance reasonably acceptable to Purchaser:

16.2.1 A general warranty deed, conveying to Purchaser merchantable fee simple title to the Property, free and clear of all liens, claims, easements, leases, and encumbrances whatsoever except for the Permitted Matters (the "Deed").

16.2.2 A bill of sale of all of the personal property being sold on the Property (the "Bill of Sale").

16.2.3 An ALTA extended coverage statement and/or title affidavit, gap undertaking, and all other affidavits, certifications, and documents required by the Title Company in connection with its issuance of the Title Policy.

16.2.4 A FIRPTA Statement from Seller certifying that Seller is not a "foreign person," "foreign estate," "foreign corporation," "foreign partnership," or any other foreign entity as such terms are defined in § 1445 of the Internal Revenue Code and the income tax regulations promulgated thereunder.

16.2.5 A certificate executed by Seller confirming that the representations and warranties made by Seller in this

Go To Regular Agenda

Contract remain true and correct as of the Closing Date ("Seller's Closing Certificate").

16.2.6 A settlement statement prepared by Escrow Agent.

16.2.7 Such other documents as reasonably may be required by Title Company to consummate the transactions contemplated by this Contract.

16.3 Purchaser's Closing Deliveries. Purchaser will deliver to Seller at Closing:

16.3.1 The Purchase Price, plus or minus prorations.

16.3.2 A settlement statement prepared by Escrow Agent.

16.3.3 A certificate executed by Purchaser confirming that the representations and warranties made by Purchaser in this Contract remain true and correct as of the Closing Date.

16.3.4 Such other documents as reasonably may be required by Title Company to consummate the transactions contemplated by this Contract.

At least ten (10) business days prior to Closing, Seller shall draft and send to Purchaser for comment the Deed, Bill of Sale, and Seller's Closing Certificate.

16.4 Real Estate Taxes and Assessments. At the Closing, Purchaser will receive a credit against the Purchase Price equal to any taxes and assessments due and payable as of the Closing Date plus 100% of the taxes not yet due and payable calculated through the date of Closing based on the most recent ascertainable tax bill. All prorations will be based on the most recent assessment and tax bills and shall be based on 100% of the then most recent taxes and assessments for the Property for a full year.

16.5 Operating Costs. Seller shall pay all expenses necessary to repair, operate, and maintain the Property accrued up to and including the Closing Date. Purchaser shall be responsible to pay such expenses accruing subsequent to the Closing Date, if any. Any expenses that have accrued up to and including the Closing Date but have not been billed to or paid by Seller as of the Closing Date will, to the extent possible, be paid by Seller (with such payment evidenced to Purchaser) at the time of Closing, or, if not so payable, at Purchaser's option, will be credited to Purchaser, provided that such credit will not release Seller of the obligation to make full payment if the credit is insufficient for any reason. The parties shall work cooperatively to cause all utilities to be transferred to the name of Purchaser, effective as of the Closing Date.

Go To Regular Agenda

16.6 Miscellaneous. All other items that are customarily prorated in transactions similar to the transaction contemplated hereunder and that are not otherwise addressed in this Contract will be prorated as of the Closing Date.

16.7 Possession. Seller shall give exclusive possession of the Property to Purchaser at the time of Closing.

16.8 Purchaser's Closing Costs. Purchaser shall pay the following expenses incurred in connection with the transactions described herein: (a) one-half of all closing fees charged by the Escrow Agent and/or the Title Company (including escrow and closing charges); and (b) Purchaser's legal fees and expenses.

16.9 Seller's Closing Costs. Seller will pay all of the other closing costs and expenses incurred in connection with the transactions described herein, including: (a) the fee for the recording of the Deed; (b) the cost of removing all monetary liens and encumbrances and any Unpermitted Matters that Seller elects to cure from title; (C) one-half of all closing fees charged by the Escrow Agent and/or the Title Company (including escrow and closing charges); (d) Seller's legal fees and expenses; (e) the cost of the Survey; and (f) all applicable state, county and municipal transfer taxes.

17. DEFAULT AND REMEDY.

17.1 Seller Default. In the event of a breach by Seller of any Seller's Warranties, or if Seller defaults in its obligation to convey the Property to Purchaser when required to do so by the terms of this Contract, and provided Purchaser has not defaulted in its obligations under this Contract, and Purchaser is aware of such default prior to Closing, Purchaser, at its option and as its sole remedies, may either: (a) terminate this Contract; or (b) proceed to exercise the right of specific performance of the obligations of the Seller hereunder. In the event of a default by Seller of which Purchaser is not aware prior to Closing, and upon the failure of Seller to cure such default within ten (10) calendar days following written notice thereof from Purchaser, Purchaser will be entitled to exercise any and all rights and remedies at law or in equity.

17.2 Purchaser Default. In the event of a default by Purchaser in the performance or observance of any of Purchaser's duties or obligations under this Contract, and provided Seller has not defaulted in the performance of any of its obligations under this Contract, then as Seller's sole remedy, this Contract shall be terminated and Purchaser shall pay to Seller the cost of the Survey, provided that the estimate of cost of the Survey was reviewed and approved by Purchaser prior to Seller ordering the Survey. The parties intend that under no circumstances will Seller be entitled any other legal or equitable remedy, including specific performance, as a remedy under this Contract.

Go To Regular Agenda

17.3 Notice and Cure. In the event of a default by either party, the non-defaulting party shall not be permitted to exercise any rights or remedies as a result of such default until after the non-defaulting party has given the defaulting party written notice of such default and an opportunity to cure such default within ten (10) calendar days after such default notice.

17.4 Attorneys' Fees and Legal Costs. If either Seller or Purchaser brings an action or proceeding to enforce or defend its rights under this Contract, the Prevailing Party in any such action or proceeding, or appeal thereon, will be entitled to receive from the non-prevailing party, and will be awarded, all of its costs, charges, and expenses (including court costs and reasonable attorneys' fees. Such costs, charges, and expenses may be awarded in the same suit or recovered in a separate suit, whether or not such action or proceeding is pursued to decision or judgment. "Prevailing Party" means the party who, whether by compromise, settlement, judgment, or the abandonment by the other party of its claim or defense, substantially, as the case may be, either: (a) attains the relief sought; or (b) defeats the relief sought.

18. NOTICES. Every notice required by this Contract shall be in writing and shall be deemed to have been delivered: (a) upon receipt or refusal of delivery, when delivered personally; (b) the day deposited with a nationally recognized overnight courier service such as Federal Express, when sent next-day delivery to a U.S. address; (c) by facsimile or electronic mail transmission with proof of transmission and copy of the notice with proof of transmission being sent by regular mail on the date of transmission. In each case, a notice sent to a party must be directed to the addresses for that party and that party's attorney, if any, set forth in Section 1.

19. MISCELLANEOUS.

19.1 Assignability. Purchaser may assign this Contract without Seller's consent to a governmental entity but not to a private third party, which assignment shall require the consent of the Seller.

19.2 Survival. The provisions of this Contract shall not be merged into any deed or other document and shall survive the Closing.

19.3 Entire Agreement. This Contract represents the complete agreement between Seller and Purchaser and supersedes all prior agreements and understandings, written and oral, between the parties hereto relating to the subject matter hereof, including any purchase proposals or so-called letters of intent executed by one or both of the parties. No modification or amendment of or waiver under this Contract will be binding upon Seller or Purchaser unless in writing signed by Seller and Purchaser.

19.4 Time of Essence. Time is of the essence of this Contract and each of its provisions. If the date for payment of any sum or the

performance of any obligation under this Contract by either party falls on a Saturday, Sunday, or national holiday, then the date for such payment or performance will be extended to the first business day following such Saturday, Sunday, or national holiday.

19.5 Severability. The invalidity or unenforceability of any provision of this Contract will not affect or impair any other provisions.

19.6 Successors and Assigns. Each provision of this Contract will extend to, bind, and inure to the benefit of Seller and Purchaser and their successors, and assigns; and all references herein to Seller and Purchaser will be deemed to include all such parties.

19.7 Governing Law. This Contract will be governed by and construed under the laws of the State of Illinois, and any lawsuit by any party related to this Contract shall be brought in the Circuit Court of Cook County.

19.8 Counterparts. This Contract may be executed in two counterparts, each of which will be deemed an original, but all of which together will constitute one and the same document.

19.9 Indemnity**.** Seller and Purchaser hereby agrees that, except for those items to be prorated under this Contract, each party will be solely liable for the payment and performance of all costs and expenses, liabilities, obligations, and claims arising out of such party's ownership and operation of the Property prior to or on and after, as the case may be, the Closing Date, and such party hereby agrees to indemnify, defend, and hold the other party harmless therefrom, including any costs, expenses, liabilities, obligations, or claims arising under or with respect to any lease, management agreement, leasing agreement, or other agreement affecting the ownership, operation, management, or leasing of the Property entered into during such party's period of ownership.

19.10 Rule Of Construction. Purchaser and Seller acknowledge that each party has actively participated in the drafting, preparation and negotiation of this Contract and each party has consulted its own independent counsel relating to any and all matters contemplated under this Contract. Each such party has agreed to enter into this Contract following such review and the rendering of such advice and each party agrees that any rule of construction to the effect that any ambiguities are to be resolved against the drafting party will not apply in the interpretation of this Contract or any amendments thereto.

19.11 Interpretation. The parties will interpret this Contract in accordance with the following: (a) any reference to a section, article, exhibit, rider, or schedule is to a section, article, exhibit, rider, or schedule of this

Go To Regular Agenda

Contract, unless otherwise stated; (b) the words "include," "includes," and "including" are to be read as if they were followed by the phrase "but not limited to;" (c) the headings in this Contract are provided for convenience only and do not affect its meaning; and (d) the definitions in this Contract apply equally to both singular and plural forms of the terms defined.

IN WITNESS WHEREOF, Purchaser and Seller have each executed this Contract as of the date written below.

PURCHASER:

VILLAGE OF WHEELING, an Illinois municipal corporation

By: _____
Name: _____
Its: _____
Date: _____

SELLER:

ALPINE VILLAGE PARTNERS, an Illinois limited partnership

By: _____
Name: _____
Its: _____
Date: _____

Go To Regular Agenda

EXHIBIT A

LEGAL DESCRIPTION OF PROPERTY

PARCEL 1:

THAT PART OF THE NORTH 20 RODS OF THE SOUTHWEST QUARTER OF SECTION 12, TOWNSHIP 42 NORTH, RANGE 11, EAST OF THE THIRD PRINCIPAL MERIDIAN, LYING EASTERLY OF THE EASTERLY LINE OF MILWAUKEE AVENUE; WESTERLY OF A LINE DRAWN FROM A POINT ON THE SOUTH LINE OF SAID NORTH 20 RODS, WHICH IS 370.0 FEET EAST OF THE CENTERLINE OF THE PAVEMENT AS IT EXISTED ON JULY 12, 1955 OF SAID MILWAUKEE AVENUE TO A POINT IN THE NORTH LINE OF SAID NORTH 20 RODS WHICH IS 402.0 FEET EAST OF THE CENTERLINE OF THE PAVEMENT OF SAID MILWAUKEE AVENUE AND NORTHERLY OF A LINE DESCRIBED AS BEGINNING AT A POINT IN THE EASTERLY LINE OF MILWAUKEE AVENUE 100 FEET NORTHERLY, MEASURED ON SAID EASTERLY LINE OF MILWAUKEE AVENUE, OF THE SOUTH LINE OF SAID NORTH 20 RODS AND RUNNING EAST PARALLEL TO THE SOUTH LINE OF SAID NORTH 20 RODS TO A POINT IN THE EASTERLY LINE OF THE PARCEL HEREIN DESCRIBED;

PARCEL 2:

THAT PART OF THE NORTH 20 RODS OF THE SOUTHWEST QUARTER OF SECTION 12, TOWNSHIP 42 NORTH, RANGE 11, EAST OF THE THIRD PRINCIPAL MERIDIAN, DESCRIBED AS FOLLOWS: COMMENCING AT A POINT ON THE SOUTH LINE OF SAID NORTH 20 RODS, 370 FEET EAST OF ITS INTERSECTION WITH THE CENTERLINE OF THE PAVEMENT AS IT EXISTED ON JULY 12, 1955 OF MILWAUKEE AVENUE; THENCE WEST ON SAID SOUTH LINE OF SAID NORTH 20 RODS 370 FEET TO ITS INTERSECTION WITH SAID CENTERLINE OF THE PAVEMENT OF MILWAUKEE AVENUE; THENCE NORTHERLY ALONG SAID CENTERLINE OF PAVEMENT A DISTANCE OF 100 FEET TO A POINT; THENCE EAST ON A LINE PARALLEL TO THE SOUTH LINE OF SAID NORTH 20 RODS TO ITS INTERSECTION WITH A LINE DESCRIBED AS: BEGINNING AT THE PLACE OF BEGINNING AFORESAID AND RUNNING NORTHERLY IN A STRAIGHT LINE TO A POINT IN THE NORTH LINE OF SAID SOUTHWEST QUARTER 402 FEET EAST OF ITS INTERSECTION WITH THE CENTERLINE OF THE PAVEMENT OF MILWAUKEE AVENUE; THENCE SOUTHERLY ON SAID LAST DESCRIBED LINE 96.55 FEET TO THE PLACE OF BEGINNING (EXCEPTING THAT PART THEREOF FALLING IN MILWAUKEE AVENUE) IN COOK COUNTY, ILLINOIS.

EXCEPT THAT PART CONVEYED TO THE STATE OF ILLINOIS DESCRIBED AS FOLLOWS:

THAT PART OF THE SOUTHWEST 1/4 OF SECTION 12, TOWNSHIP 42 NORTH, RANGE 11, EAST OF THE THIRD PRINCIPAL MERIDIAN, COOK COUNTY, ILLINOIS, DESCRIBED AS FOLLOWS:

BEGINNING AT THE INTERSECTION OF THE NORTH LINE OF LOT 1 IN THE RESUBDIVISION OF LOT 5 IN GREWE'S SUBDIVISION, ACCORDING TO THE PLAT THEREOF RECORDED NOVEMBER 4, 1927 AS DOCUMENT NUMBER 378867 AND THE EASTERLY RIGHT OF WAY LINE OF MILWAUKEE AVENUE, SAID EASTERLY RIGHT OF WAY LINE BEING A 23,390.57 FOOT RADIUS CURVE, CENTER OF CIRCLE BEARS NORTH 66 DEGREES 51 MINUTES 03 SECONDS EAST FROM SAID POINT OF BEGINNING; THENCE NORTHWESTERLY 127.99 FEET ALONG SAID CURVE CENTRAL ANGLE 0 DEGREES 18 MINUTES 49 SECONDS; THENCE SOUTH 24 DEGREES 17 MINUTES 54 SECONDS EAST, 90.38 FEET; THENCE SOUTH 23 DEGREES 04 MINUTES 49 SECONDS EAST, 19.96 FEET; THENCE SOUTH 16 DEGREES 51 MINUTES 44 SECONDS EAST, 21.68 FEET TO THE NORTH LINE OF SAID LOT 1; THENCE NORTH 89 DEGREES 17 MINUTES 38 SECONDS WEST, 8.35 FEET ALONG SAID NORTH LINE TO THE POINT OF BEGINNING.

PINs: 03-12-301-012-0000 and 03-12-301-014-0000

Common Address: 573 – 601 South Milwaukee Avenue, Wheeling, Illinois 60090

Go To Regular Agenda

EXHIBIT B

DISCLOSURE AFFIDAVIT

State of Illinois)
)SS
County of Cook)

I, _____, reside at _____ in the _____ in the _____, County of _____, State of Illinois, being first duly sworn and having personal knowledge of the Property in question, swear to the following:

1. I am over the age of eighteen and the (circle one) owner or authorized agent of the Property to be purchased by the Village.

2. The Property in question has a common street address referred to as 573-601 South Milwaukee Avenue, Wheeling, Illinois 60090, and with property index numbers PINs 03-12-301-012-0000 and 03-12-301-014-0000 (the "Property").

3. Fee simple ownership of the Property is held by Alpine Village Partners, an Illinois limited partnership.

4. I understand that pursuant to 50 ILCS 105/3.1, as part of execution of the "Real Estate Purchase Contract" to which this Disclosure Affidavit is attached, state law requires the owner, authorized trustee, corporate official or managing agent to submit a sworn affidavit to the Village disclosing the identity of every owner and beneficiary who shall acquire or obtain *any* interest, real or personal, in the Property, and every shareholder entitled to receive more than 7½% of the total distributable income of any corporation who shall acquire or obtain any interest, real or personal, in the Property after the transaction contemplated by the "Real Estate Purchase Contract," which this affidavit is a part of, is consummated. I also understand that the state law requires the identification of the actual parties benefiting from any transaction with a governmental unit involving the procurement of the ownership or use of any real property. The required affidavits are attached hereto.

5. As the (circle one) member, owner, authorized trustee, corporate official, general partner or managing agent, I declare under oath that the owner of the Property is Alpine Village Partners, an Illinois limited partnership.

Subscribed and Sworn to before me this
___ day of _____, 2016.

AFFIANT

By: _____

Date: _____

Notary Public

_____

Go To Regular Agenda

EXHIBIT C

SELLER'S DELIVERIES

1. A title policy or title commitment for the Property dated no earlier than thirty (30) days before the Effective Date.
2. A survey of the Property dated no earlier than six (6) months before the Effective Date.
3. Real estate tax bills for years 2014, 2015, and 2016 if any.
4. Any and all engineering reports, soil or geotechnical reports, boundary or topographical surveys, licenses, permits and any other documents pertaining to the Property currently in the possession or control of any of the Seller.
5. Any and all records, documents (including writings, drawings, graphs, charts, photographs, phone~~o~~ records, and all other data completion from which information can be obtained, translated, if necessary, by Purchaser through detection devices into reasonably usable form), or reports of any kind (including all written, printed, recorded or graphic matter however produced or reproduced and all copies, drafts and versions thereof not identical in each respect to the original) which relate or refer (which means, in addition to their customary and usual meaning, assess or assessing, concern or concerning, constitute or constituting, describe or describing, discuss or discussing, embody or embodying, evidence or evidencing, mention or mentioning and reflect or reflecting) to the environmental matters and/or conditions associated either directly or indirectly with the Property, including but not limited to all written reports of a site assessment, all environmental audits, soil test reports, water test reports, all laboratory analysis and all documents, reports or writings relating or referring to any underground storage tanks or storage facility existing on or under the Property currently in the possession of any of the Seller.

Go To Regular Agenda

EXHIBIT D

MOBILE HOME PARK MANAGEMENT CONTRACT

(attached)

Go To Regular Agenda

MOBILE HOME PARK MANAGEMENT CONTRACT

This **MOBILE HOME PARK MANAGEMENT CONTRACT** ("Agreement") dated as of this ___ day of _____, 2016, by and among the Village of Wheeling, an Illinois home rule corporation ("Owner") and Alpine Village Partners, an Illinois limited partnership ("Manager").

WITNESSETH:

WHEREAS, there is a mobile home park in Wheeling, Illinois, commonly known as the "Fox Point Mobile Home Park," at 573-601 South Milwaukee Avenue, Wheeling, Illinois 60090 (PINs 03-12-301-012-0000 and 03-12-301-014-0000), on the property legally described on **EXHIBIT A** attached hereto and made a part hereof ("Property"); and

WHEREAS, there are tenants and occupants residing in mobile homes on the Property; and

WHEREAS, Manager has owned the Property and managed the tenants and occupants on the Property for many years; and

WHEREAS, the Owner desires to take title to the Property from Manager, relocate the tenants and occupants thereon, and clear the Property of mobile homes and related structures (the date the Owner takes title to the Property from the Manager is the "Acquisition Date"); and

WHEREAS, the Owner and Manager desire that Manager act as manager for the Property while tenants and occupants are relocated, in accordance with the terms of this Agreement.

NOW THEREFORE, in consideration of the mutual covenants and agreements contained herein, the parties hereto hereby agree as follows:

1. **Effective Date and Appointment of Manager.** This Agreement shall be effective on the date the Owner takes title to the Property ("Effective Date"). All obligations in this Agreement shall begin on the Effective Date, and until the Effective Date the obligations in this Agreement shall not be in force or effect. Owner hereby appoints Manager, and Manager hereby accepts, such appointment as the management and operating representative of Owner with respect to the Property, all subject to and in accordance with the terms and conditions of this Agreement. Manager shall perform its obligations hereunder in a diligent, cost-effective, good, workmanlike and efficient manner consistent with the highest standards of professional property management managers.

2. **Manager's Obligations.** In connection with this Agreement, Manager shall have the following obligations:

Go To Regular Agenda

(a) **Collection of Rents.** Manager shall collect all rent and other charges due from tenants on the Property, and shall pay all such monies collected over to Owner no less than every thirty (30) days. Owner authorizes Manager to request, demand, collect and issue receipts for all such rent and other charges.

(b) **Evictions.** Manager shall not initiate any eviction proceeding regarding the Property.

(c) **Maintenance and Repairs.** Manager shall perform at Owner's expense, all maintenance and repairs to the Property as shall be required by Owner, any applicable easement agreement, lease or operating agreement or law ("Applicable Laws"), including but not limited to the Illinois Mobile Home Park Act, 210 ILCS 115/1, *et seq*. and the Illinois Mobile Home Landlord and Tenant Rights Act, 765 ILCS 745/1, *et seq*., or as shall be required to preserve the Property in a constant state of good condition and operating efficiency, including without limitation, interior and exterior cleaning, maintenance of the grounds and parking lots and sanitary sewer system, landscaping, snow removal, plumbing, carpentry and other normal maintenance and repair work to the Owner-owned buildings within the Property, mechanical equipment and other improvements on the Property, provided that Manager shall not incur, without prior authorization from Owner, any expense of more than One Thousand Dollars ($1,000.00) for any single time of repair, except that emergency repairs immediately necessary for the preservation and safety of the Property or to avoid the suspension of any service to the Property or to avoid danger of life or property may be made without the approval of Owner, provided that Manager shall notify Owner of any such emergency repairs as soon as practicable. Manager shall regularly travel to the Property in order to perform its duties as set forth in this Agreement. Manager shall promptly investigate and make a full and timely report to Owner as to all accidents and/or claims for damage arising out of or relating to the ownership, operation and maintenance of the Property and as to all damage or destruction to the Property, which report shall contain the estimated cost of any necessary repair to the Property and Manager's recommendation with respect thereto, and shall assist Owner in the preparation of any and all reports required by any insurance company in connection with any of the foregoing. Payment of expenses shall be made as set forth in Section 2(l) below.

(d) **Availability.** Manager shall provide 24 hour a day on call service seven days a week to the Property to enable responses to emergency calls and emergency situations.

(e) **Contracts.** Manager, in Owner's name and at Owner's expense, shall make all contracts for such services deemed by Manager or Owner to be necessary or advisable for the operation of the Property and approved in writing by Owner in advance. Manager shall cause all services rendered to tenants or occupants of the Property to be performed at a minimum reasonable cost to Owner consistent with Owner's standards for the Property and the requirements contained in leases to tenants of the Property or other applicable agreements. Manager shall not enter into any contract for said services not cancelable on thirty (30) days prior notice by Owner. Manager shall bid contracts for

Go To Regular Agenda

services at least once per year and shall obtain bids for each service from at least three (3) contractors. Manager shall also purchase or cause to be purchased, such equipment, tools, appliances, materials and supplies as are reasonable and necessary to maintain properly the Property. Manager shall review all invoices from vendors to insure accuracy and that all work has been performed before invoices are approved and paid.

(g) **Legal Documents.** Manager shall immediately forward to Owner all summonses, subpoenas and other like legal documents served upon Manager relating to actual or alleged liability of Owner, Manager or the Property, together with its recommendations relating thereto.

(h) **Books and Records.** Manager shall keep and maintain in accordance with generally accepted accounting principles consistently applied, such books and records with respect to the Property as shall reflect Manager's activities hereunder and shall be required to carry out Manager's obligations hereunder. Such records shall be maintained on a current basis and Owner shall have the right at its expense to review, audit and copy the records during the normal business hours. Manager shall also maintain their records in accordance with the Local Records Act of the State of Illinois and shall promptly respond to a request from the Village for any records concerning Manager's work for the Village to allow the Village to comply with the Illinois Freedom of Information Act. Manager shall cooperate with and provide data and necessary back-up to Owner's accountant as reasonably requested.

(i) **Monthly Reports.** At no additional cost to Owner, Manager shall prepare and send electronically to Owner at the address of Owner as provided herein, monthly reports with respect to the Property containing the following information:

(i) Occupancy percentage and any variance during the preceding months, including a list of occupied and vacant units as of the date of issuance of the monthly report;

(ii) Itemized statements of income and expenses together with cash receipt and disbursements report, accounts receivable and payable reports and bank statements;

(iii) A statement concerning the general condition of the Property and any problems which have occurred or are anticipated in the future and the cost or expense or projected cost or expense, if any, of solving such problems;

(iv) The status of the operation of the Property and such conditions or events which may affect the same;

(v) The current rent roll on the Property; and

(vi) Upon Owner's request, Manager, at Owner's discretion, shall remit to Owner or deposit into the Account all excess funds located in the operating

Go To Regular Agenda

account that are not otherwise needed to pay current operating expenses of the Property as determined by Owner and shall notify Owner of additional funds required at any time which are not available in said accounts in order to fulfill the obligations of Manager set forth in this Agreement.

All of the foregoing shall be rendered to Owner on or before the fifteenth (15th) day of the month following the end of each month. In addition to the foregoing, Manager shall prepare and deliver to Owner, within thirty (30) days after the end of each fiscal year, a net cash flow statement for such year, and such additional information as may be reasonably requested by Owner and typically provided by property managers in relation to properties similar to the Property, all certified as to accuracy by Manager. Manager will immediately notify Owner of any circumstances affecting the Property which a reasonably prudent manager would advise an owner of an income property investment.

(j) **Intentionally Left Blank**.

(k) **Intentionally Left Blank**.

(l) **Payment of Expenses.** Owner and Manager shall use reasonable best efforts to cause all invoices and bills regarding the Property to be issued with Owner's name. Owner shall pay directly for costs which can be paid by Owner in Owner's name. Payment of bills or invoices remaining in the name of Manager shall be timely sent to Owner, and Owner shall pay such bills and invoices. In the event of an emergency expense incurred by Manager pursuant to Section 2(c) above, Manager shall forward bills, invoices, and/or other detailed information as requested by Owner, and Owner shall thereafter reimburse Manager. Owner shall pay the amount of all real estate taxes and other impositions levied by appropriate taxing or other governmental authorities before interest or penalty begins to accrue thereon.

(m) **Review of Bills.** Manager shall receive and verify all bills or statements for such taxes and impositions and shall advise Owner as to any material increase in such taxes or impositions, as to whether the amount thereof should be challenged and as to any means available for the reduction of the same, together with its recommendations as to the foregoing. If Owner shall request, Manager shall institute appropriate protests or challenges to such taxes or impositions or take such other appropriate steps to have the same reduced.

(n) **Tenant Relations.** Manager shall ensure that all obligations of the Owner under leases and tenancies within the Property and other applicable agreements are performed in a timely manner along with maintaining a professional relationship with tenants and occupants. Manager shall cause compliance by the tenants of such space with the terms and conditions of their respective leases and to notify Owner within ten (10) days of any default by any tenant under a lease of a part of the Property. Manager shall not be required to undertake any repairs which are designated as tenant repair obligations under the leases except as expressly set forth in the tenant leases.

Go To Regular Agenda

(o) **Contacts.** Owner and Manager shall each designate a primary and secondary contact for all communication so as to keep each other well informed as to the status of the operation of the Property. On a monthly basis, Manager shall meet with Owner or its designated representatives during normal business hours in person or by conference call to discuss the Property and/or the activities of Manager under this Agreement.

(p) **Compliance with Applicable Laws.** Manager shall take all action as may be necessary to comply with any and all Applicable Laws, including the Illinois Mobile Home Park Act, 210 ILCS 115/1, *et seq*. and the Illinois Mobile Home Landlord and Tenant Rights Act, 765 ILCS 745/1, *et seq*. Manager shall promptly, and in no event later than forty eight (48) hours from the time of their receipt, notify Owner in writing of any violation or alleged violation of Applicable Law.

(r) **Personnel.** Manager shall, at Manager's expense, investigate, hire, train, pay, supervise and discharge the personnel necessary to be employed in order to properly manage the maintenance and operation of the Property, and there shall be no charge to Owner for Manager's overhead incurred in connection with the Property. Such personnel shall in every instance be deemed employees of Manager and not of Owner, who shall have no right to supervise or direct such employees. Manager shall execute and file punctually when due, all forms, reports and returns required by law relating to the employment of personnel.

(s) **Lease Extensions.** Manager shall not approve, authorize, or extend any lease or tenancy on the Property without the written permission of the Owner, which permission may be withheld in the Owner's sole discretion.

(t) **Maintenance of Property** Manager shall at all times during the term of this Agreement operate and maintain the Property in a manner consistent with sound management techniques, with a view to the preservation and enhancement and efficient operation of the Property, and in accordance with the standard of care for mobile home parks in the northern Illinois region.

3. **Access to Records.** The Owner and its representatives shall have full access to all records regarding the Property.

4. **Manager's Fees.** Manager shall be paid by Owner a monthly management fee of Two Thousand Five Hundred Eighty Two and 10/100 Dollars ($2,582.10) (the "Management Fee"). The Management Fee shall be paid monthly in advance within five (5) days following the first day of each calendar month. The Management Fee shall be paid from the Acquisition Date until the date the last resident vacates the Property.

Except as expressly set forth in this Section 4, Manager shall not be entitled to any compensation for performing Manager's responsibilities under this Agreement. The Management Fee shall be paid with funds available to the Manager pursuant to the

Go To Regular Agenda

"COMMUNITY DEVELOPMENT BLOCK GRANT DISASTER RECOVERY PROGRAM SUBRECIPIENT AGREEMENT (VILLAGE OF WHEELING – FOX POINT MOBILE HOME PARK)," by and between Owner and Cook County, with an effective date of _____ __, 2016 (the "Funding Agreement"). In the event of any conflict between any term of this Agreement and the Funding Agreement, the terms of the Funding Agreement shall control. The Owner's obligations under this Contract are limited as set forth in the Funding Agreement, and the Owner's obligations are limited to the extent sufficient funds are available to Owner under the Funding Agreement to pay Manager the Management Fee.

5. **Termination.** This Agreement shall terminate when the last resident vacates the Property or at such earlier time upon agreement of the Owner and the Manager, and Owner may terminate this agreement upon forty five (45) days prior written notice of the termination date set for in a written notice to Manager. Manager may terminate upon sixty (60) days written notice to Owner.

6. **Breach by Manager.** In addition to the Owner's rights to terminate this Agreement pursuant to Section 5 hereof, in the event Manager should breach any of its obligations hereunder, and should Manager fail to cure such a breach within fourteen (14) days following written notice thereof to Manager, Owner may terminate this Agreement by giving written notice to Manager in addition to pursuing such other remedies as Owner may have at law or in equity. In the event Owner should breach any of its obligations hereunder, and such breach shall continue for a period of fourteen (14) days following written notice thereof to Owner, Manager may terminate this Agreement and/or pursue such remedies as Manager shall have at law or in equity.

7. **Actions Upon Termination.** With respect to the termination of this Agreement, Owner and Manager agree as follows:

(a) Upon the termination of this Agreement, Manager shall render to Owner a final accounting which shall cover the period from the date of the last statement rendered to Owner, or if no statement has been furnished, from the date of this Agreement to the termination date; provided, however, in the event such termination date shall be a date other than the last day of a calendar month, the final accounting shall be computed as of the last day of the month in which termination occurs which statement shall be prepared in accordance with generally accepted accounting principles consistently applied.

(b) Upon any such termination, Manager shall forthwith (i) surrender and deliver up to Owner the Property and all rents and income, if any, thereof and other monies of Owner on hand and in any bank account or other location controlled by Manager, (ii) deliver to Owner as received any monies due Owner under this Agreement but received after such termination, (iii) deliver to Owner all materials and supplies, equipment, contracts and documents pertaining to the Property, and such other accounting, papers, and records pertaining to this Agreement as Owner shall request, and (iv) assign such existing contracts entered into the name of Manager, if any, relating

Go To Regular Agenda

to the operation and maintenance of the Property as Owner shall require or instruct, provided that Owner shall agree to assume or cause such assignee to assume all liability thereunder accruing after the termination of this Agreement.

8. **Remedies.** In the event of any default by Manager under this Agreement, Owner shall be entitled to, in Owner's discretion, exercise any one or more of the following remedies: (i) specific performance of Manager's obligations; and/or (ii) the appointment of a receiver or receivers for all or any part of the Property; and/or (iii) pursue any and all other remedies available at law or in equity; and/or (iv) terminate this Agreement.

9. **Independent Contractor.** Manager's relationship to Owner, during the period or periods of Manager's management of the Property and its services hereunder, shall be that solely of an independent contractor, and this Agreement shall not be construed as an agreement of employment of principal and agency, a partnership or any other form of business entity. Neither party hereto shall have any right to incur any obligation or liability on behalf of the other except as expressly set forth herein.

10. **Indemnification and Insurance.**

(a) Manager shall indemnify, defend and save harmless Owner, its employees, agents, directors, elected and appointed officials, attorneys, volunteers, officers, and beneficiaries from all claims, losses, liability, suits, and damages, including attorneys' fees, arising directly or indirectly from one or more of the following: (i) negligence, gross negligence, willful misconduct, fraud, or criminal conduct of the officers, members, agents, or employees of Manager; (ii) derogation of written instructions from the Owner, or (iii) breach of this Agreement by Manager. In the event of any claim, loss, liability, suit, or damage, Owner shall have the right to counsel of its choice and the right to direct its own defense.

(b) Insurance covering Manager's obligations in this Agreement, including its indemnification obligations herein, shall be obtained using one of the following methods:

(i) Manager shall obtain an insurance policy, or policies, at Owner's cost; or

(ii) Owner shall provide insurance coverage through a policy, or policies, obtained by Owner, at Owner's cost.

(c) The insurance policy, or policies, required herein shall have coverage for bodily injury, death, and property damage written on the comprehensive form, in the amount of $1,000,000.00 per occurrence and $3,000,000.00 aggregate. Owner shall have the right to approve the coverage and carrier of any insurance policy or policies required herein, which approval shall not be unreasonably withheld. Manager shall carry during the life of this Agreement, a Worker's Compensation Insurance Policy with

Go To Regular Agenda

coverage in the statutory amount conforming to the current laws of the State of Illinois and shall furnish Owner a Certificate of Insurance evidencing such coverage.

The policy or policies of insurance shall specifically recognize and cover Manager's indemnification obligations under this Agreement, and shall contain cross-liability endorsements. Said insurance shall provide that the insurance provided shall be primary and non-contributory, shall provide Owner with its choice of counsel in the event of any claims, and shall provide Owner with the right to conduct its own defense.

11. **Notices.** Any notice, consent or communication required or permitted hereunder shall be given in writing, sent by (a) overnight delivery service through a nationally recognized carrier with proof of delivery, (b) hand delivery, (c) United States mail, postage prepaid, registered or certified mail, or (d) facsimile (provided that such facsimile is confirmed by overnight delivery service, hand delivery or by United States mail in the manner previously described), addressed as follows:

For Owner: Village of Wheeling
2 Community Boulevard
Wheeling, IL 60090
Attn: Andrew Jennings, Director of Community Development
Phone: 847/499-9061
Fax: 847/459-9692
Email: ajennings@wheelingil.gov

With a copy to: Klein, Thorpe & Jenkins, Ltd.
20 N. Wacker Drive, Suite 1660
Chicago, Illinois 60606
Attn: James V. Ferolo / Gregory T. Smith
Phone: 312/984-6400
Fax: 312/984-6444
Email: jvferolo@ktjlaw.com / gtsmith@ktjlaw.com

For Manager: Alpine Village Partners
400 Lake Cook Road, Suite 112
Deerfield, Illinois 60015
Attn: Lawrence Fischer
Phone: 847-948-9400/cell 847-867-7098
Fax:847-948-9412
Email: LFischer@reip.com

or to such other address or to the attention of such other person as hereafter shall be designated in writing by the applicable party sent in accordance herewith. Any such notice or communication shall be deemed to have been given in the case of delivery service or mail, as of the date of first attempted delivery at the address and in the manner provided herein, or in the case of telegram or telex, upon receipt.

Go To Regular Agenda

12. **Non-Assignment.** This Agreement is a contract for personal services and all rights or obligations of Manager hereunder shall not be assigned by Manager without the prior written consent of Owner, which consent the Owner may withhold in its sole discretion. It is understood and agreed that Owner has entered into this Agreement with Manager in reliance on the unique expertise and experience of Manager in the leasing and operation of commercial real estate and shopping center developments.

13. **Time.** Time is of the essence.

14. **Exhibits.** The following Exhibit is attached hereto and made a part hereof for all purposes: **EXHIBIT A** - Legal Description.

15. **Further Documentation.** Each of the parties hereto agrees to provide the other, upon not less than fifteen (15) days prior request, a certificate ("Estoppel Certificate") certifying whether this Agreement is in full force and effect (unless such is not the case, in which case such party shall specify the basis for such claim), that the requesting party is not in default of any term, provision or condition of this Agreement beyond any applicable notice and cure provision (or specifying each such claimed default) and certifying such other matters reasonably requested by the requesting party. If either party fails to comply with this provision within the time limit specified, and if, after an additional seven (7) days' notice there still is no compliance, then said non-complying party shall be deemed to have appointed the other as its attorney-in-fact for execution of same on its behalf as to that specific request only.

IN WITNESS WHEREOF, Purchaser and Seller have each executed this Contract as of the date written below.

OWNER:

VILLAGE OF WHEELING, an Illinois municipal corporation

By: _____
Name: _____
Its: _____
Date: _____

MANAGER:

ALPINE VILLAGE PARTNERS, an Illinois limited partnership

By: _____
Name: _____
Its: _____
Date: _____

Go To Regular Agenda

EXHIBIT A

Legal Description of the Property

PARCEL 1:

THAT PART OF THE NORTH 20 RODS OF THE SOUTHWEST QUARTER OF SECTION 12, TOWNSHIP 42 NORTH, RANGE 11, EAST OF THE THIRD PRINCIPAL MERIDIAN, LYING EASTERLY OF THE EASTERLY LINE OF MILWAUKEE AVENUE; WESTERLY OF A LINE DRAWN FROM A POINT ON THE SOUTH LINE OF SAID NORTH 20 RODS, WHICH IS 370.0 FEET EAST OF THE CENTERLINE OF THE PAVEMENT AS IT EXISTED ON JULY 12, 1955 OF SAID MILWAUKEE AVENUE TO A POINT IN THE NORTH LINE OF SAID NORTH 20 RODS WHICH IS 402.0 FEET EAST OF THE CENTERLINE OF THE PAVEMENT OF SAID MILWAUKEE AVENUE AND NORTHERLY OF A LINE DESCRIBED AS BEGINNING AT A POINT IN THE EASTERLY LINE OF MILWAUKEE AVENUE 100 FEET NORTHERLY, MEASURED ON SAID EASTERLY LINE OF MILWAUKEE AVENUE, OF THE SOUTH LINE OF SAID NORTH 20 RODS AND RUNNING EAST PARALLEL TO THE SOUTH LINE OF SAID NORTH 20 RODS TO A POINT IN THE EASTERLY LINE OF THE PARCEL HEREIN DESCRIBED;

PARCEL 2:

THAT PART OF THE NORTH 20 RODS OF THE SOUTHWEST QUARTER OF SECTION 12, TOWNSHIP 42 NORTH, RANGE 11, EAST OF THE THIRD PRINCIPAL MERIDIAN, DESCRIBED AS FOLLOWS: COMMENCING AT A POINT ON THE SOUTH LINE OF SAID NORTH 20 RODS, 370 FEET EAST OF ITS INTERSECTION WITH THE CENTERLINE OF THE PAVEMENT AS IT EXISTED ON JULY 12, 1955 OF MILWAUKEE AVENUE; THENCE WEST ON SAID SOUTH LINE OF SAID NORTH 20 RODS 370 FEET TO ITS INTERSECTION WITH SAID CENTERLINE OF THE PAVEMENT OF MILWAUKEE AVENUE; THENCE NORTHERLY ALONG SAID CENTERLINE OF PAVEMENT A DISTANCE OF 100 FEET TO A POINT; THENCE EAST ON A LINE PARALLEL TO THE SOUTH LINE OF SAID NORTH 20 RODS TO ITS INTERSECTION WITH A LINE DESCRIBED AS: BEGINNING AT THE PLACE OF BEGINNING AFORESAID AND RUNNING NORTHERLY IN A STRAIGHT LINE TO A POINT IN THE NORTH LINE OF SAID SOUTHWEST QUARTER 402 FEET EAST OF ITS INTERSECTION WITH THE CENTERLINE OF THE PAVEMENT OF MILWAUKEE AVENUE; THENCE SOUTHERLY ON SAID LAST DESCRIBED LINE 96.55 FEET TO THE PLACE OF BEGINNING (EXCEPTING THAT PART THEREOF FALLING IN MILWAUKEE AVENUE) IN COOK COUNTY, ILLINOIS.

EXCEPT THAT PART CONVEYED TO THE STATE OF ILLINOIS DESCRIBED AS FOLLOWS:

THAT PART OF THE SOUTHWEST 1/4 OF SECTION 12, TOWNSHIP 42 NORTH, RANGE 11, EAST OF THE THIRD PRINCIPAL MERIDIAN, COOK COUNTY, ILLINOIS, DESCRIBED AS FOLLOWS:

BEGINNING AT THE INTERSECTION OF THE NORTH LINE OF LOT 1 IN THE RESUBDIVISION OF LOT 5 IN GREWE'S SUBDIVISION, ACCORDING TO THE PLAT THEREOF RECORDED NOVEMBER 4, 1927 AS DOCUMENT NUMBER 378867 AND THE EASTERLY RIGHT OF WAY LINE OF MILWAUKEE AVENUE, SAID EASTERLY RIGHT OF WAY LINE BEING A 23,390.57 FOOT RADIUS CURVE, CENTER OF CIRCLE BEARS NORTH 66 DEGREES 51 MINUTES 03 SECONDS EAST FROM SAID POINT OF BEGINNING; THENCE NORTHWESTERLY 127.99 FEET ALONG SAID CURVE CENTRAL ANGLE 0 DEGREES 18 MINUTES 49 SECONDS; THENCE SOUTH 24 DEGREES 17 MINUTES 54 SECONDS EAST, 90.38 FEET; THENCE SOUTH 23 DEGREES 04 MINUTES 49 SECONDS EAST, 19.96 FEET; THENCE SOUTH 16 DEGREES 51 MINUTES 44 SECONDS EAST, 21.68 FEET TO THE NORTH LINE OF SAID LOT 1; THENCE NORTH 89 DEGREES 17 MINUTES 38 SECONDS WEST, 8.35 FEET ALONG SAID NORTH LINE TO THE POINT OF BEGINNING.

PINs: 03-12-301-012-0000 and 03-12-301-014-0000

Common Address: 573 – 601 South Milwaukee Avenue, Wheeling, Illinois 60090

Go To Regular Agenda

VILLAGE OF WHEELING
LEGISLATIVE COVER MEMORANDUM

AGENDA ITEM NO(S): 13.G
(To be inserted by Deputy Clerk)

DATE OF BOARD MEETING: September 6, 2016

TITLE OF ITEM SUBMITTED: Resolution Commemorating the Renaming of East Drive in the Village of Wheeling as Gangnam Drive

BASIC DESCRIPTION OF ITEM[1]: The attached resolution memorializes the renaming of East Drive—a roadway north of the Korean Cultural Center of Chicago that connects Capitol Drive to Wolf Road—in honor of the Gangnam District of Seoul, South Korea. Illinois' Tenth United States Congressional District (which includes Wheeling) and the Gangnam District are seeking opportunities for mutually-beneficial exchanges in the areas of business, culture, tourism, and education.

BUDGET[2]: N/A

BIDDING[3]: N/A

EXHIBIT(S) ATTACHED: Staff Memorandum, Resolution

SUBMITTED FOR BOARD CONSIDERATION: VILLAGE MANAGER

---

[1] *The purpose of the proposed item and a description of same. If the issue is site specific, such as an annexation or road improvement, a map must be attached to the memorandum.*
[2] *If applicable, provide all budgetary considerations as follows: is the item covered in the current budget; fund(s) the item is to be charged to; expenses per fund(s) and total cost; and necessary transfer(s) or supplemental appropriation(s).*
[3] *If applicable, describe the bidding process and results for purchases and contracts. If applicable, state whether or not any particular city, state or federal program was considered*

Go To Regular Agenda

VILLAGE OF WHEELING ILLINOIS

MEMORANDUM

TO: Village President, Clerk and Board of Trustees

FROM: Jon A. Sfondilis, Village Manager

DATE: September 15, 2016

SUBJECT: Renaming of East Drive as Gangnam Drive

EXECUTIVE SUMMARY

On September 6, the Board of Trustees will be asked to approve a commemorative resolution renaming East Drive as Gangnam Drive in honor of the District of Gangnam in Seoul, South Korea. This resolution is ceremonial, since legislative action is not required to rename Village streets.

On Friday, September 16, a delegation from the District of Gangnam—an autonomous district in Seoul, South Korea's capital and largest city—will visit Wheeling. On the occasion of this visit, the Village will announce the renaming of East Drive—the roadway north of the Korean Cultural Center of Chicago that connects Capitol Drive to Wolf Road—as Gangnam Drive. Since legislative action is not required to rename Village streets, this action is ceremonial; it also helps create an easily-accessible historical record of the circumstances of the renaming, and of the Village's broader outreach initiative to communities in Korea.

The renaming itself is not purely ceremonial; it will be reflected on maps, street signage, etc. Although East Drive is an important link between the various Capitol Drive campuses and Wolf Road, it does not currently include any mailing addresses; therefore the renaming will have minimal practical impact on adjacent facilities. The Korean Cultural Center intends to request a change of its postal address to a Gangnam Drive address in the near future. The attached map shows the location of the street.

This is the second of three planned street renamings / honorary designations intended to recognize the Village's partnerships with communities in South Korea. The Village recently renamed South Drive as Suncheon Drive; the third such action will honor the City of Busan. Staff will provide additional information as the occasion draws closer.

I am available to respond to any questions or concerns.

Go To Regular Agenda

RESOLUTION NO. 16 - _____

RESOLUTION COMMEMORATING THE RENAMING OF EAST DRIVE IN THE VILLAGE OF WHEELING AS GANGNAM DRIVE

WHEREAS, as the home of the Korean Cultural Center of Chicago, the Village of Wheeling has cultivated bonds of friendship and shared interest with communities in the Republic of Korea, including the District of Gangnam; and

WHEREAS, the District of Gangnam has demonstrated notable hospitality and generosity toward the Village, toward the Korean Cultural Center, and toward other members of the broader community, as well as an investment in building productive long-term relationships in Wheeling and throughout the region; and

WHEREAS, the Board of Trustees of the Village of Wheeling has determined that it is appropriate to designate a permanent monument in recognition and in furtherance of the Village's special partnership with the District of Gangnam;

NOW, THEREFORE, BE IT RESOLVED BY THE PRESIDENT AND BOARD OF TRUSTEES OF THE VILLAGE OF WHEELING, COUNTIES OF COOK AND LAKE, **STATE OF ILLINOIS**, that the roadway presently designated as East Drive be renamed as **SUNCHEON DRIVE** in honor of the District of Gangnam; and

BE IT FURTHER RESOLVED that the Village Manager is hereby directed to take the necessary measures to update signage, maps, and records to reflect this change.

Trustee _____ moved, seconded by Trustee _____

that Resolution No. **16 -** _____ be adopted.

President Argiris	_____	Trustee Lang	_____
Trustee Brady	_____	Trustee Papantos	_____
Trustee Krueger	_____	Trustee Vito	_____
		Trustee Vogel	_____

Adopted this _____ day of _____, 2016 by the President and Board of Trustees of the Village of Wheeling, Illinois.

_____
Dean S. Argiris
Village President

ATTEST:

_____
Elaine E. Simpson
Village Clerk

Regular Agenda

GIS consortium MapOffice™

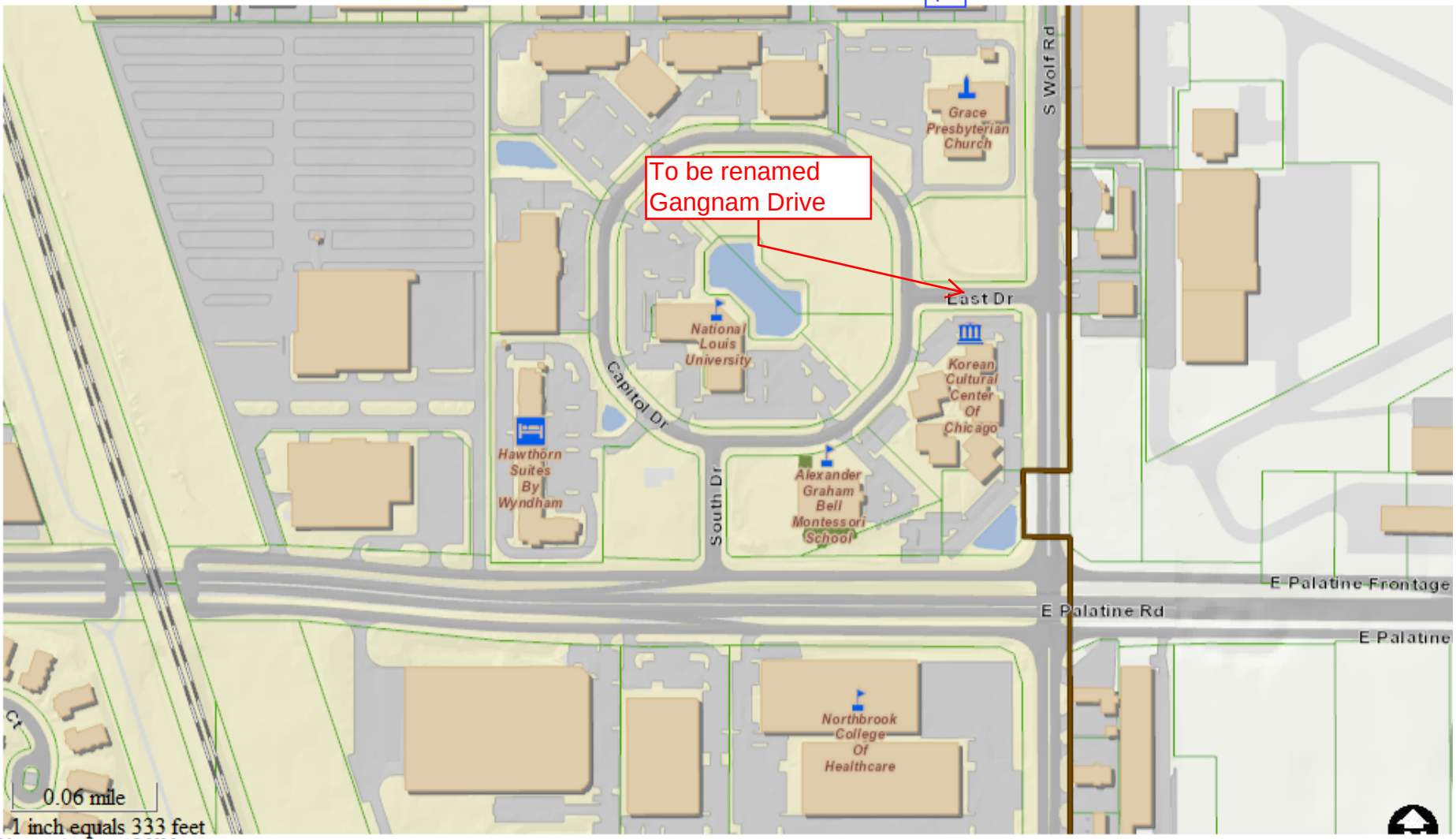

Map created on August 5, 2016.

© 2016 GIS Consortium and MGP Inc. All Rights Reserved.
The GIS Consortium and MGP Inc. are not liable for any use, misuse, modification or disclosure of any map provided under applicable law.
Disclaimer: This map is for general information purposes only. Although the information is believed to be generally accurate, errors may exist and the user should independently confirm for accuracy. The map does not constitute a regulatory determination and is not a base for engineering design. A Registered Land Surveyor should be consulted to determine precise location boundaries on the ground.