WHEELING PLAN COMMISSION
THURSDAY, NOVEMBER 3, 2016 6:30 P.M.

AGENDA FOR A REGULAR MEETING OF THE PLAN COMMISSION
to be held in the Board Room of the Village Hall
2 Community Boulevard, Wheeling, Illinois

REVISED OCTOBER 28, 2016

This meeting will stream live and be televised on Wheeling's Cable Channels 17 & 99

---

1. CAL L TO ORDER

2. PLEDGE OF ALLEGIANCE

3. ROLL CALL

4. CHANGES TO THE AGENDA

5. CITI ZEN CONCERNS AND COMMENTS

6. CONSENT ITEMS

A) Docket No. SCBA 16-26
Siri Restaurant
401 E. Dundee Road
Appearance Approval of Freestanding & Wall Signs

7. ITEMS FOR REVIEW

A) Docket Nos. 2016-22 and PC 16-12 (Continued from October 27th hearing)
Ha milton Partners
800 Northgate Parkway
(2016-22) Variations from Title 19, Zoning, Relating to Required Parking
(PC 16-12) Site Plan and Appearance Approval of a Spec Industrial Building

B) Docket Nos. PC 16-15 AND SCBA 16-27
Café Zupas
1590 E. Lake Cook Road
(PC 16-15) Minor Site Plan & Appearance Approval of Landscape Modifications
(SCBA 16-27) Appearance Approval of Freestanding & Wall Signs

C) Docket No. PC 16-16
Harmony Village
(see attached list for exact addresses)
Minor Site Plan & Appearance Approval of Façade Modifications

8. APPROVAL OF MINUTES – none

9. OTHER BUSINESS

10. ADJOURNMENT

IF YOU WOULD LIKE TO ATTEND A VILLAGE MEETING BUT REQUIRE AUXILIARY AID SUCH AS A SIGN LANGUAGE INTERPRETER, PLEASE CALL (847) 459-2600 AT LEAST 72 HOURS PRIOR TO THE MEETING.

Public Hearing Information
Wheeling Plan Commission Meeting
November 3, 2016
(Attachment to Agenda)

Docket No. 2016-22 HP Wheeling 1 LLC, owner, is seeking a variation from Title 19, Zoning, of the Wheeling Municipal Code, Chapter 19.11 General Development Standards, Section 19.11.010 Off-Street Parking and Loading, Section E Parking Standards, Subsection 1 Minimum Required Parking per Land Use Category, and associated sections to reduce the required parking for speculative industrial uses in association with the development of 800 Northgate Parkway, a vacant property in the I-3 General Industrial District.

Harmony Village

1	448-460 Hickory Drive (7 Units)
2	403-413 Hickory Drive (6 Units)
3	455-461 Hickory Drive (4 Units)
4	407-419 Harmony Drive (7 Units)
5	450-460 Maple Drive (6 Units)
6	431-441 Maple Drive (6 Units)
7	447-455 Harmony Drive (6 Units)
8	459-469 Harmony Drive (6 Units)
9	481-491 Alder Drive (6 Units)
10	457-465 Alder Drive (5 Units)
11	439-449 Buckeye Drive (6 Units)
12	395-405 Poplar Drive (6 Units)
13	480-490 Poplar Drive (6 Units)
14	479-491 Rustic Drive (7 Units)
15	359-369 Rustic Drive (6 Units)
16	482-492 Rustic Drive (6 Units)
17	460-464 Beech Drive (3 Units)
18	352-356 Beech Drive (3 Units)
19	461-465 Beech Drive (3 Units)
20	458-464 Ferne Drive (4 Units)
21	361-367 Ferne Drive (4 Units)
22	442-450 Vista Drive (5 Units)
23	420-432 Ferne Drive (7 Units)
24	402-414 Honey Locusts Dr. (7 Units)
25	360-370 Honey Locusts Dr. (6 Units)
26	402-410 Elm Drive (5 Units)
27	390-396 Elm Drive (4 Units)
28	403-411 Elm Drive (5 Units)
29	400-412 Harmony Drive (7 Units)
30	399-407 Ferne Drive (3 Units)
31	383-393 Ferne Drive (6 Units)
32	366-372 Vita Drive (4 Units)
33	433-441 Poplar Drive (7 Units)
34	388-400 Poplar Drive (7 Units)
35	462-472 Buckeye Drive (6 Units)
36	440-446 Buckeye Drive (4 Units)
37	463-473 Buckeye Drive (6 Units)
38	462-472 Harmony Drive (6 Units)
39	448-458 Harmony Drive (6 Units)
40	443-451 Maple Drive (5 Units)
41	428-438 Maple Drive (6 Units)
42	Clubhouse - 1 Ferne Drive

REQUEST FOR PLAN COMMISSION ACTION
STAFF PROJECT REVIEW

TO: Chairperson Ruffatto and Members of the Wheeling Plan Commission

FROM: Andrew C. Jennings, Director of Community Development
Brooke A. Jones, Senior Planner

RE: Docket No. SCBA 16-26
Siri Restaurant
401 E. Dundee Road
Appearance Approval of Wall & Freestanding Signs

DATE OF REPORT: October 28, 2016

DATE OF MEETING: November 3, 2016

PROJECT OVERVIEW: The petitio ner is requ esting a ppearance approval of business identification wall sign and freestanding signs for a new restaurant within Riverside Plaza.

LOCATION MAP:

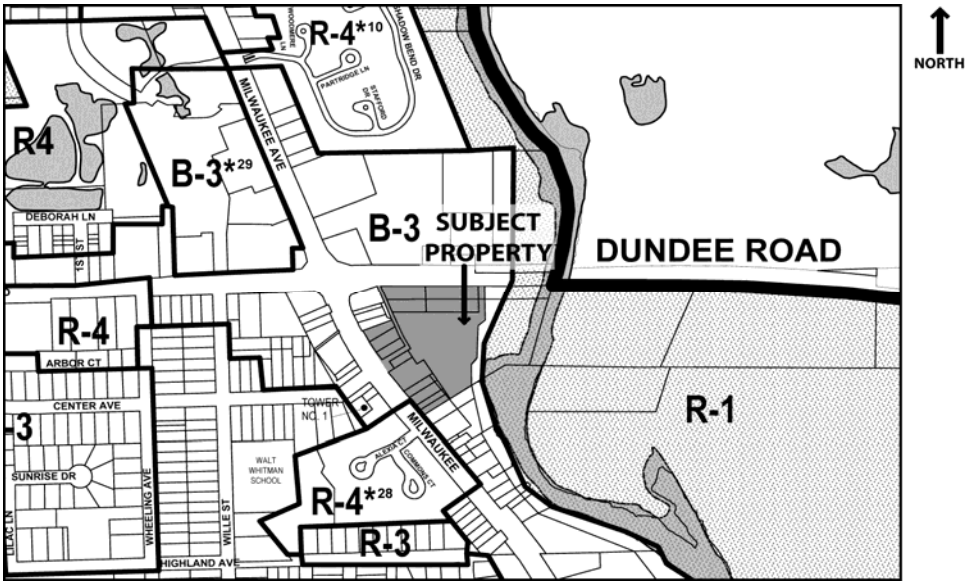

GENERAL PROPERTY INFORMATION

Applicant Name: DK Signs

Property Owner Name: St. Andrews Properties

Common Property Address: 401 E. Dundee Road (Riverside Plaza)

Common Location: Located on the south side of Dundee Road, just east of Milwaukee Avenue

Neighboring Property Land Use(s): North: Commercial

West: Commercial
South: Commercial
East: Open Space (Forest Preserve)

Comprehensive Plan Designation: Commercial

Existing Use of Property: Commercial – retail

Existing Property Zoning: B-3 General Commercial and Office District

DESCRIPTION OF PROPOSAL

Sire restaurant, which is taking over the special use permit from Deka Restaurant, is requesting appearance approval of its freestanding and wall signs.

SIGN PLAN REVIEW

Sign Locations: The existing freestanding sign is located in the landscaped area between the parking and the patio. The proposed wall sign is located at the far east end of the building, facing Dundee Road.

Proposed Signage Type, Size and Materials:
The existing v-shaped, internally-illuminated black cabinet sign is made of aluminum. The petitioner plans to only replace the sign panels. The sign panels have a black background with white lettering. Each panel is 60" x 100" or 41.7 sq. ft. in size.

The proposed wall sign is comprised of internally illuminated individual channel letters on a raceway and a box sign. The letters, which comprise the business name, have white acrylic faces with black trim caps and black returns. The black box (cabinet) sign below includes a description of the business in white lettering. The sign size is not shown on the plan, but was included in the application. The sign size is 60' x 100", which has a total sign area of 41.7 sq. ft. The unit has a frontage of approximately 125 feet.

Therefore, the proposed signs meet the size requirements of the Sign Code.

Landscaping: No changes are proposed to the existing landscaping. The approved landscape plan for Deka is provided. The plan includes mature crabapples, junipers, yews, and wintercreeper. Additionally, a mix of viburnum, dianthus, blue aster, and black-eyed susans are indicated.

The existing landscaping meets the requirements of the Sign Code.

STAFF REVIEW

Impact on adjacent uses: No impact on adjacent uses is expected.

Staff Recommended Action: Staff recommends approval of the proposed freestanding and wall sign.

PROPOSED MOTION

If the Plan Commission finds that the petitioner has satisfied the requirements for the granting of appearance approval of the signs, an appropriate motion would be to:

Approve SCBA 16-26, granting appearance approval for modifications to a freestanding sign and for a new wall sign as indicated in the sign plans submitted by DK Signs on October 26, 2016 on behalf of Siri Restaurant, located at 401 E. Dundee Road, Wheeling, Illinois.

Andrew C. Jennings, AICP
Director of Community Development

Brooke A. Jones
Senior Planner

Attachments:

Photo of existing conditions (staff)

Freestanding sign plan

Wall sign plan

Approved landscape plan for Deka, received 7.9.2014

Siri – 401 E. Dundee Road

Docket No. SCBA 16-26 (Appearance Approval of Wall and Freestanding Signs)

Plan Commission Meeting – November 3, 2016

Existing conditions of freestanding sign – looking south

Siri – 401 E. Dundee Road

Docket No. SCBA 16-26 (Appearance Approval of Wall and Freestanding Signs)

Plan Commission Meeting – November 3, 2016

Existing conditions of building facade – looking southeast

401 E DUNDEE RD, WHEELING IL 60090

REPLACING 2 SIGN PANELS WITH VINYL GRAPHICS FOR EXISTING ILLUMINATED FREESTANDING SIGN.

SIZE: 60" X 100" EACH PANEL.

DK SIGNS & GRAPHICS INC.
28W500 LESTER ST
WEST CHICAGO IL 60185
630-205-3411
F 630-293-8985

Exhibit received October 26, 2016

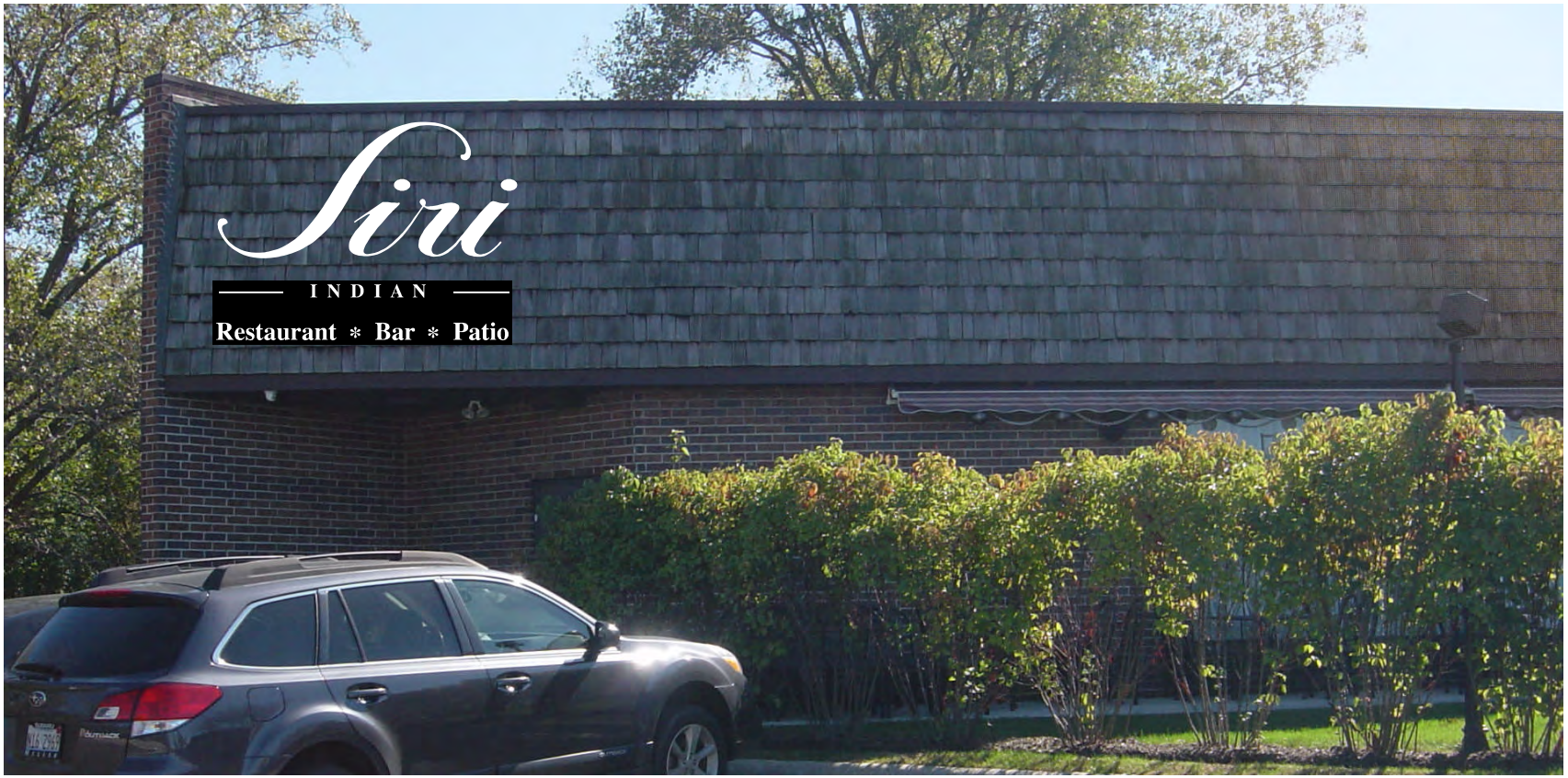

Typical Raceway Mount channel Letters with LED's

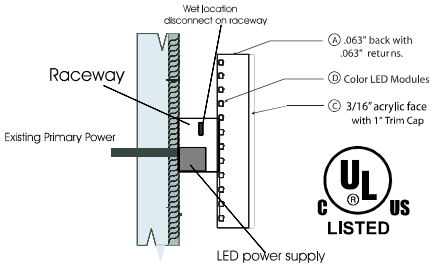

401 E DUNDEE RD, WHEELING IL 60090

ILLUMINATED CHANNEL LETTERS SIGN ON A RACEWAY.

COLORS:

BLACK-RETURN
BLACK-TRIM CAP
WHITE-PLEXIGLASS FACES
RACEWAY COLOR MATCH COLOR OF THE WALL
ILLUMINATED WITH WHITE LED. LOW VOLTAGE SYSTEM.

DK SIGNS & GRAPHICS INC.
28W500 LESTER ST
WEST CHICAGO IL 60185
630-205-3411
F 630-293-8985

Exhibit received October 26, 2016

DEKA Restaurant

Shtram's Deli

401 | 411 East Dundee Road
Wheeling, Illinois

DAVID R. McCALLUM ASSOCIATES, INC.
LANDSCAPE ARCHITECTS
350 N. Milwaukee Avenue | Libertyville, Illinois 60048
T 847.362.0209 | F 847.362.0214

McCALLUM ASSOCIATES

Aleksandr D. Vaysman | Architect
1056 Court Avenue | Highland Park, Illinois 60035
T 847.922-1795 | F 847.478.0222

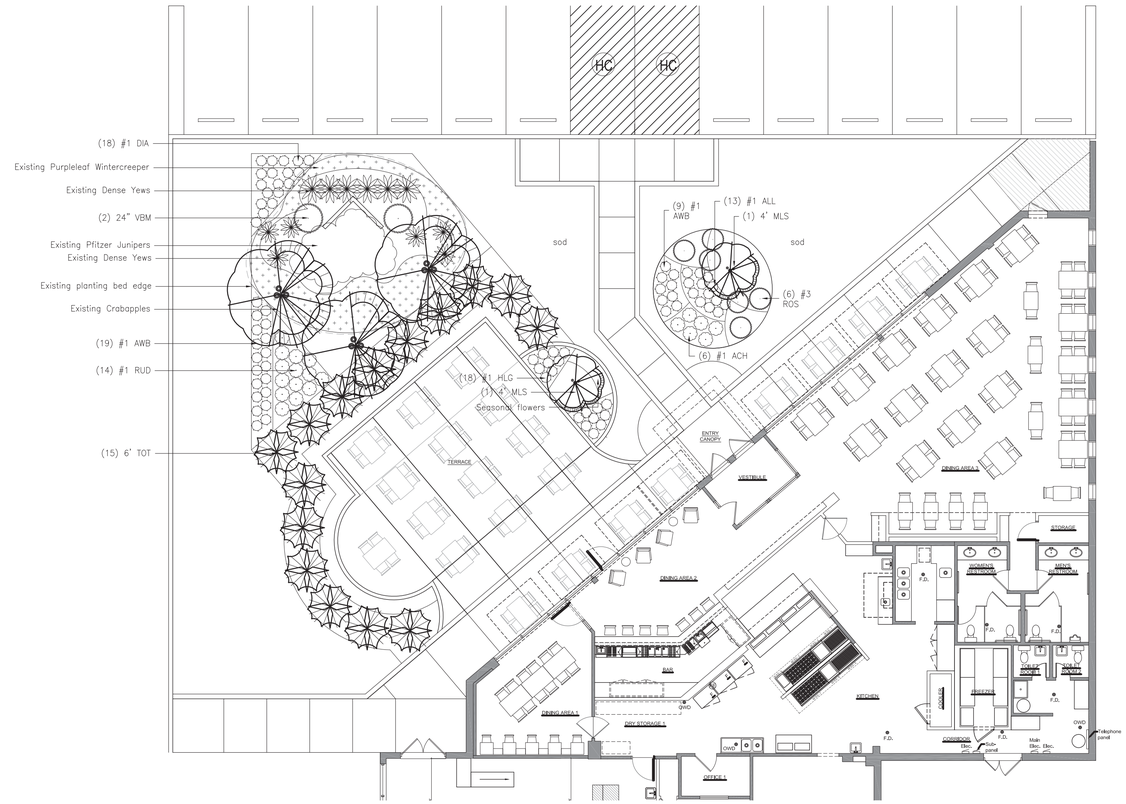

Plant List

Ornamental Trees Key	Qty.	Size	Botanical Name	Common Name	Remarks
MLS	2	4'	Malus sargentii	Sargent Crabapple	BB/Clump

Shrubs Key	Qty.	Size	Botanical Name	Common Name	Remarks
ROS	6	#3	Rosa 'My Girl Easy Elegance'	My Girl Easy Elegance Rose	Container
TOT	15	6'	Thuja occidentalis 'Technyii'	Mission Arborvitae	BB
VBM	2	24"	Viburnum dentatum 'Christom'	Blue Muffin Arrowwood Viburnum	BB

Perennials Key	Qty.	Size	Botanical Name	Common Name	Remarks
ALL	13	#1	Allium 'Summer Beauty'	Summer Beauty Allium	Container
ACH	6	#1	Achillea 'Moonshine'	Moonshine Yarrow	Container
AWB	28	#1	Aster dumosus 'Wood's Blue'	Wood's Blue Aster	Container
DIA	18	#1	Dianthus gratianopolitanus 'Firewitch'	Firewitch Cheddar Pinks	Container
HLG	18	#1	Hemerocallis 'Little Grapette'	Little Grapette Daylily	Container
RUD	14	#1	Rudbeckia fulgida 'Goldsturm'	Goldsturm Black-Eyed Susan	Container

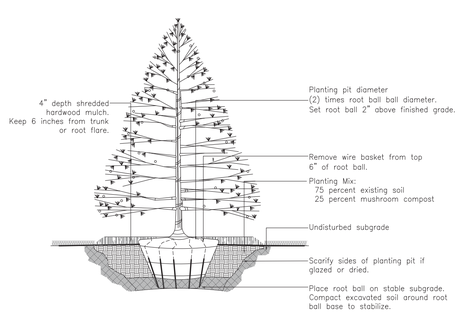

Detail
Evergreen Tree Planting

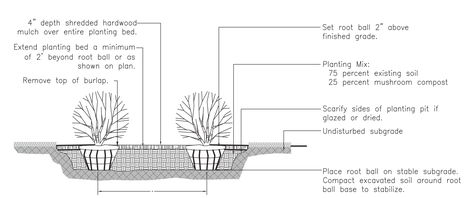

Detail
Shrub Planting

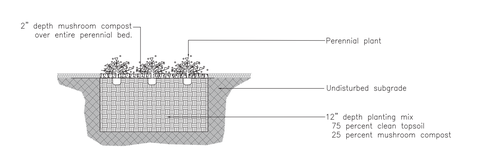

Detail
Perennial Planting

Landscape Plan

Plan Received July 9, 2014

Mark	Description	Date
1	For Village Review	07.09.14

Issuance

Number
424514

Scale
1" = 10'

North

File
4245FP2A

Sheet
L1.0

REQUEST FOR PLAN COMMISSION ACTION
STAFF PROJECT REVIEW

TO: Chairperson Ruffatto and Members of the Wheeling Plan Commission

FROM: Andrew C. Jennings, Director of Community Development
Brooke A. Jones, Senior Planner

RE: **Docket Nos. 2016-22 and PC 16-12**
Hamilton Partners
800 Northgate Parkway
(2016-22) Variation from Title 19, Zoning, regarding required parking
(PC 16-12) Site Plan & Appearance Approval for a speculative industrial development

DATE OF REPORT: October 31, 2016

DATE OF MEETING: November 3, 2016

PROJECT OVERVIEW: The petitioner is seeking a zoning variation for reduction in required parking and site plan and appearance approval to construct a new speculative industrial facility in the I-3 General Industrial District. These items were continued from the October 27th hearing to November 3rd.

LOCATION MAP:

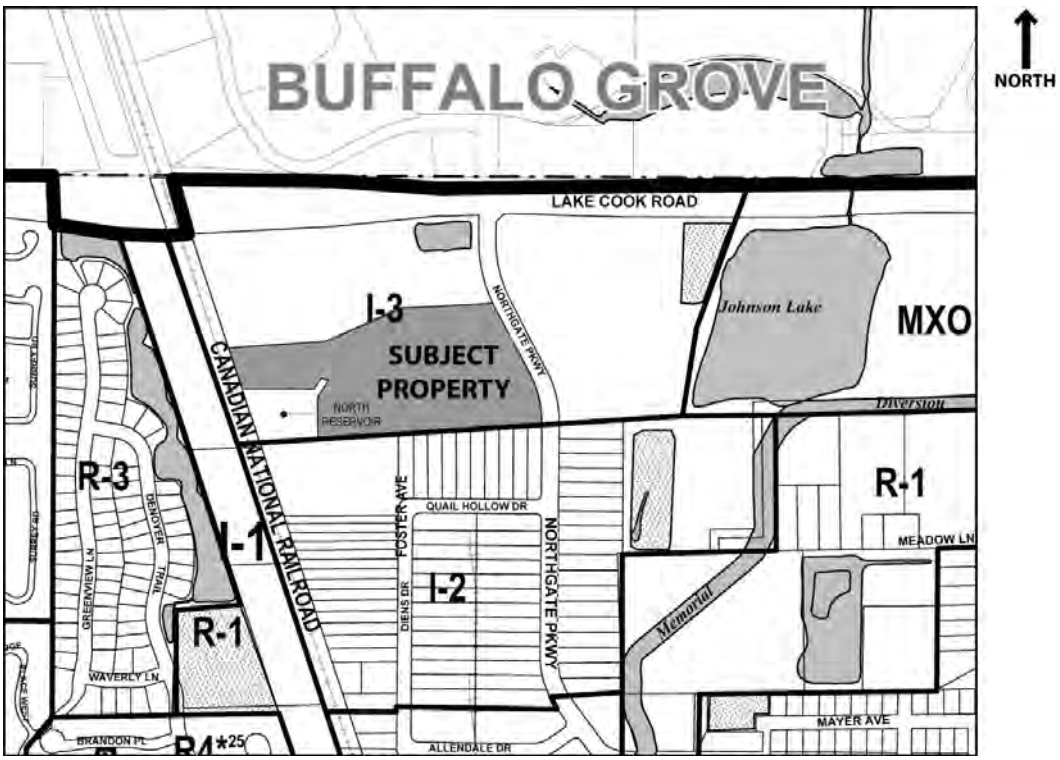

GENERAL PROPERTY INFORMATION

Applicant Name: Mike Wauterlek, Hamilton Partners

Property Owner: HP Wheeling 1 LLC

Common Property Address: 1590 Lake Cook Road (Schwind Plaza)

Common Location: Located on the west side of Northgate Parkway, north of Quail Hollow Drive and South of Lake Cook Road

Neighboring Property Land Use(s): North: Industrial
West: Single-Family Residential
South: Industrial
East: Industrial

Comprehensive Plan Designation: Industrial

Property Size: 13.95 sq. ft.

Existing Use of Property: Undeveloped

Proposed Use of Property: Speculative industrial

Existing Property Zoning: I-3 General Industrial District

Previous Zoning Action on Property:
none

DESCRIPTION OF PROPOSAL

The petitioner, Hamilton Partners, is proposing to construct a large speculative warehouse/distribution development on a vacant parcel in the I-3 General Industrial District. The development requires site plan and appearance review and a variation request for landbanked parking.

The plans include access to the Village water tower site, which is located just beyond the southwest edge of the subject property.

On October 27, 2016 the Plan Commission continued the hearing to November 3, 2016 so that south and east building elevations could be provided for review.

SITE PLAN REVIEW

Scale of Site Plan: 1" = 60' (reduced)

Proposed General Site Layout: Driveways are proposed for the north and south ends of the site, from Northgate Parkway. The north entry will be exclusively for employee/visitor parking. The south entry will accommodate employees/visitors and truck traffic. An access road loops the north and south parking areas. A future (landbank) parking area for 90 stalls is proposed at

the west end of the site. All truck docks are located on the south side of the building. This "truck court" will also accommodate employee parking as needed. Since the site is being developed as speculative industrial space. The plan is accommodating a mix of industrial uses. If the dock doors are necessary and less employee parking is required for the industrial users, then employees will not park in the "truck court." An access road is also planned to connect to the existing Village water tower site.

Total Number of Parking Spaces: The speculative industrial use of the building requires parking at a ratio of 2/1,000 sq. ft. Because the building is greater than 80,000 sq. ft., it qualifies for a 25% parking reduction. Therefore, the total parking requirement for the site is 272 spaces (1.5/1000). The petitioner is proposing a total of 288 spaces, of which 90 will be landbanked for future use (if necessary). 97 parking spaces will be located in the main employee lot north of the building. 40 spaces are located in the "truck court." 61 spaces are located south of the truck court, near the south property line.

The proposal requires a variation for the landbanked parking stalls. If the landbanked parking is not constructed, the total parking deficit is 74. Without the landbanked parking, the project has a parking ratio of 1.09 stalls / 1,000 sq. ft. With the landbanked parking, the project has a parking ratio of 1.59 stalls / 1,000 sq. ft, which is greater than the parking requirement of 1.5/1000 (25% parking reduction applied).

The parking variation will require that a covenant be recorded against the property prior to occupancy. Such covenant will grant the Village discretion in determining if and when (due to the current mix of uses for the building) the landbanked parking will be constructed.

Site Access to the Village Water Tower: As shown on the ALTA survey, the Village has an ingress and egress easement along the roadway near the south property line of the subject property to the Village's water tower site, which is located just southeast of the subject property. This easement will need to be vacated upon redevelopment of the site. Furthermore, a new access easement will need to be granted to the Village for future access to the water tower site. Staff has added conditions of approval to the Site Plan and Appearance motion to address these easements.

Ownership: The applicant is the property owner.

Trash Enclosure: No centralized trash enclosure is proposed. At the October 27th hearing, the petitioner indicated that trash would be held indoors and carted outdoors for pickups.

Site Lighting: A full photometric plan and light fixture details have been provided. The plan includes a mix of building-mounted and pole-mounted fixtures.

Sidewalks: There is an existing public walk on the west side of Northgate Parkway.

Landscaping Plan: The landscaping plan includes foundation plantings primarily near the building entries and also along the east side of the building. The foundation plantings include a mix of hydrangea, wintercreeper, Covey Weeping Redbuds, Autumn Brilliance Serviceberries,

and boxwoods. Trees are provided in the parking lot islands in the north parking lot. Detailed plant lists are also provided for the wetland and detention areas. A variety of deciduous, coniferous and ornamental trees are planned along the perimeter of the site. The balance of the pervious site, including the landbanked parking area to the west, will be seeded for turf grass.

Landscape Irrigation: No reference to irrigation is noted in the plans. Staff has added a condition of approval that irrigation is required per code.

BUILDING APPEARANCE REVIEW

Building Size: The building will be 181,049 sq. ft. The total height of the building to the top of the parapet wall is 40 feet. The ceiling height will be 32 feet. The maximum allowed building height in the I-3 District is 40 feet.

Exterior Building Materials/Colors: The proposed building is comprised of exterior pre-cast concrete panels. The primary building color appears to be an off-white or cream color with multiple accent colors. The building entrances are located at the northeast and northwest corners of the building. The entry points of the building include a two-story glass façade. The first floor entries include a storefront window and door system. Clearstory windows are repeated on each façade. Between the use of clearstory windows and a pattern of colors in the concrete, the long walls are sufficiently broken up.

Building elevations have been provided for all four facades.

Material Samples Provided: Material and color samples will be provided at the meeting.

HVAC/Mechanical Components Screened: The location of mechanical units is not provided. The Plan Commission discussed screening with the petitioner on October 27th. The petitioner indicated that screening units will be mounted to the rooftop units and that the screening would be consistent with the building design (louvered system).

Exterior Downspouts: At the October 27th hearing, the petitioner indicated the downspouts will be internal.

STANDARDS FOR VARIATION

Following are standards for variation with petitioner's responses. *The petitioners' response to the following questions has been shown in italics.* **Staff comments are in bold.**

1. State how the particular physical surroundings, shape, or topographical condition of the specific property involved would result in a practical difficulty or particular hardship upon or for the owner, lessee or occupant, as distinguished from a mere inconvenience, if the strict letter of the regulations were carried out.

"It has been our experience that distributors are significantly more likely to lease an industrial property in this geographic area. Distributors typically require less car parking than manufacturers. Our proposed site plan allows for car parking expansion should we locate a manufacturer or a distributor with a non-typical parking requirement."

If not granted the variation, the applicant would need to construct the parking in the proposed landbank area to the west of the building.

2. Indicate how the hardship is due to unique circumstances that do not generally apply to the other properties or uses.

"Competitive properties in the area will not be required to provide the parking required per village code. As a result, the cost of constructing additional car parking will become an economic burden to the project."

The proposed parking requirement is based upon a spec requirement of 2/1,000. The petitioner indicates the actual parking needs of this development will be much lower than the Village's parking requirement.

3. Describe how the alleged difficulty or hardship has not been created by any person presently having an interest in the property.

"This hardship is not the result of actions taken by the applicant."

The applicant indicates the parking demand is based upon the market, which is inconsistent with the parking requirements of the Zoning Code.

4. State how the property in question cannot yield a reasonable return if permitted to be used only under the conditions allowed by the regulations in that zone.

"The leasing market for industrial properties is extremely competitive. If the property is leased to a distributor, the parking lot to the west and cost associated with constructing it will become a detriment to the project."

Without the parking variation, the project may not be developed.

5. State how the granting of the variation will not alter the essential character of the locality.

"The area consists of various types of warehouse uses with varying facility needs. The proposed building coverage will allow for maximum future flexibility of uses."

There is no likely impact on the character of the area related to the variation.

6. Describe how the proposed variation will not impair an adequate supply of light and air to adjacent property, or substantially increase congestion in the public streets, or increase the danger of fire, or endanger the public safety, or substantially diminish or impair property values within the neighborhood.

> *"The attached traffic study states that the proposed development will not adversely impact traffic in the area. The proposed development will have a positive impact on property values in the surrounding area."*
>
> **No impact is expected as a result of the granting of the variation.**

STAFF REVIEW

Fire Department Review : The Fire Department has submitted comments dated October 20, 2016. The comments can be addressed at building permit, including the truck turning radius exhibit.

Engineering Division Review : The Engineering Division has received the plans and indicated that the submittal is complete and that it does not appear that there will be any issues satisfying the engineering requirements for the property. The wetland impact areas have already been addressed by MWRD.

Impact on Adjacent Uses: There is no significant impact anticipated on adjacent uses.

Staff Recommended Action: Staff recommends that the Plan Commission review the new south and east building elevations with the petitioner prior to taking action on Docket Nos. 2016-22 and PC 16-12. All other issues were addressed on October 27, 2016.

PROPOSED MOTIONS

If the Plan Commission finds that the petitioner has satisfied the requirements for parking variation and site plan and appearance of the industrial development, appropriate motions would be to:

Recommend approval of Docket No. 2016-22, granting a variation from Title 19, Zoning, of the Wheeling Municipal Code, Chapter 19.11 General Development Standards, Chapter 19.11 General Development Standards, Section 19.11.010 Off-Street Parking and Loading, Section E Parking Standards, Subsection 1 Minimum Required Parking per Land Use Category, and associated sections, to reduce the required parking for speculative industrial uses, from 272 to 198 in order to accommodate a plan for landbanked parking, in accordance with the site plan submitted September 21, 2016, for an industrial development, to be located at 800 Northgate Parkway, Wheeling Illinois, subject to the following condition:

1. That prior to building occupancy, a covenant shall be recorded against the property indicating that the landbanked parking will be constructed upon determination from the Village that the additional parking is necessary.

And recommend approval of Docket No. PC 16-12 granting site plan and appearance approval as required under Title 19, Zoning, of the Wheeling Municipal Code, Chapter 19-07 Industrial Districts and Chapter 19-12, Site Plan Approval Requirements, in order to construct a new

speculative industrial d evelopment in accordance with th e follo wing exhibits su bmitted by Hamilton Partners on Septem ber 21, 2016 (except as noted), for the undeveloped property known as 800 Northgate Parkway, Wheeling, Illinois:

- Cover letter
- Site plan
- Northwest building perspective plan
- Northeast building perspective plan
- North and east building elevations plan
- South and west building elevations plan (10.31.2016)
- Landscape plans (3 sheets)
- Photometric plan
- Lighting specs (6 sheets)
- Engineering plans (22 sheets)
- Fire truck turning exhibit
- ALTA Survey
- Traffic study (56 sheets) (10.04.2016)

And with the following conditions:

1. The Village shall have continuous access to the water tower site throughout construction;
2. Prior to occupancy, the existing Village access easement shall be vacated;
3. Prior to occupancy, a new easem ent granting the Village access thro ugh the site to the Village water tower site, shall be executed;
4. That landscape irrigation shall be provided in accordance with the code; and
5. That the truck turning radius exhibit may be adjusted at final engineering.

Andrew C. Jennings, AICP	Brooke A. Jones
Director of Community Development	Senior Planner

Attachments: Photos of existing conditions (staff)

Fire Department comments, 10.20.2016

~~Engineering Division comments, 10.20.2016~~

Cover letter

Site plan

Elevation plans (4 sheets)

Landscape plans (3 sheets)

Photometric plan

Lighting specs (6 sheets)

Engineering plans (22 sheets)

Fire truck turning exhibit

ALTA Survey

Traffic study (56 sheets)

MEMO – Fire Prevention Bureau

TO: Brooke Jones, Village Planner

FROM: Ronald S. Antor, Fire Inspector

CC: Andrew Jennings, Director of Community Development

Keith MacIsaac, Fire Chief

FPB File

DATE: October 20, 2016

SUBJECT: Proposed Spec Warehouse – 800 Northgate Parkway - Plans received for review by the Fire Department, September 30, 2016.

The Wheeling Fire Department has reviewed the submittals received related to the above referenced project and has the following comments:

Site Plan

1. The site plan reviewed includes a new 181,049 square foot, spec warehouse building with office space. The space has the ability to be used by multiple tenants and not necessarily a single tenant.
2. The address included with the submittal documents, 800 Northgate Parkway does not fit the village's grid addressing for the site. The address needs to be revised to fit in with the addressing ranges on Northgate Parkway.
3. A turning radius analysis was included, but only showed one travel route for the site. Additional documentation needs to be provided showing access around the site for both north and southbound traffic on Northgate Parkway entering into each of the properties driveways.
4. Based on the one turning radius sample provided:
    a. Modifications are required for the parking lot and drive based on the turning radius analysis provided due to vehicle movement into on-coming traffic areas or over the curbing at the perimeter of the drive.
5. The fire apparatus access routes shall be capable of supporting fire apparatus with a gross vehicle weight of 85,000 pounds.
6. Fire lanes shall be posted as required by the Fire Department.
7. The site water main improvements shall comply with all Village of Wheeling Municipal Codes which includes, but is not limited to the "Manual of Practice for the Design of Public & Private Improvements" and the 2012 Edition of the International Fire Code. Water main improvements required would include:
    a. A looped watermain shall be provided around the site serving the sprinkler system water supply and site hydrants.

b. A separate fire service supply and domestic supply is required instead of the single service shown on the submittal documents.

   i. The fire service supply main size shall be based on the building's needed fire flow.

   ii. Fire hydrants shall not be placed on the building's fire service supply.

c. Fire hydrants shall be located around the site with spacing not to exceed 300 feet.

d. A fire hydrant shall be provided within 50' of the building's Fire Department Connection Location (FDC).

8. Trees and light fixtures along the drives that are fire access routes shall not hang over the drives/parking lots in a manner that hinders Fire Department access. A minimum of 13'6" overhead clearance shall be provided over the fire apparatus access routes.

9. A clear space of at least 4-feet shall be maintained around the circumference of any fire hydrants. This includes light fixtures, transformers, and landscaping.

10. The building's Fire Department connection shall be located at the front of the building or at another location as approved by the Fire Department.

11. Site landscaping features, utilities, or similar obstructions shall not impede access to fire protection equipment, i.e. building Fire Department Connection (FDC). The FDC location shown on the submittal documents is blocked by vehicle parking and is therefore not permitted.

Spec Warehouse – 800 Northgate Parkway – A new Office/Warehouse building

1. Based on the information provided for review, the proposed building would be a mixed use occupancy comprising of B (Business) and S (Storage) Use Group Occupancies as defined in the 2012 Edition of the International Building (IBC) and Fire Prevention Codes (IFC).

2. All construction for the new building would need to comply with the Village's Building and Fire Prevention Codes (2012 Editions of the International Building Code & International Fire Code – with amendments). Some of the code requirements that this would include are:

   a. Height/area requirements based on construction type and use.

   b. The building is required to be fully sprinklered with a system designed and installed in accordance with NFPA 13 (Including rack storage).

   c. The building is required to be provided with a monitored fire alarm system designed and installed in accordance with NFPA 72.

At this time there are no other Fire Department comments related to the project as presented in the documents reviewed.

Hamilton Partners – 800 Northgate Parkway

Docket No. 2016-22 and PC 16-12 (Zoning Variation Related to Required Parking and Site Plan & Appearance Approval of a Speculative Industrial Development)

Plan Commission Meetings – October 27, 2016 & November 3, 2016

Existing conditions along Northgate Parkway (looking west)

HAMILTON PARTNERS

August 29th, 2016

RE: 800 Northgate Wheeling, Illinois

To Whom It May Concern:

Hamilton Partners was formed in 1987 after a core group of partners separated from Trammell Crow's Midwest operations. Hamilton Partners has since grown to be one of the largest privately held real estate development firms in the central US with a total portfolio of over 25 million square feet and a conservative market value in excess of $2 billion. Our portfolio consists of office, industrial, apartment and retail with projects in Chicago, Salt Lake City, Denver, Milwaukee and Raleigh Durham.

The property at 800 Northgate gives us an opportunity to expand upon an existing portfolio located at Lake Cook Road and Johnson Drive totaling in excess of 1,000,000 square feet. The proposed property will be the most functional industrial property in the area totaling 181,049 square feet with the ability to be demised to approximately 40,000 square foot suites. The proposed facility will offer 32' clear heights, 35 dock doors, 2 drive in doors, high efficiency lighting, a 130' truck court, and the highest car parking ratio in the submarket for similar properties.

Hamilton Partners' business model has been to construct quality properties with an infinite holding period. We look forward to partnering with the Village of Wheeling on this project and others over the years to come.

Mike Wauterlek
Hamilton Partners Real Estate
300 Park Boulevard, Suite 201
Itasca, Illinois 60143

Exhibit received September 21, 2016

PROJECT DATA:

SITE AREA:	
GROSS:	13.95 AC (607,585 SF)
DETENTION:	1.57 AC (68,431 SF) @11%
NET:	12.4 AC (539,154 SF)
	(LESS WETLANDS, DETENTION & AREA N.I.C.)
TOTAL BUILDING AREA:	181,049 SF
COVERAGE:	33.58% (NET)
AUTO PARKING:	
PROPOSED:	97 STALLS
FUTURE:	90 STALLS
FUTURE TOTAL:	187 STALLS
DRIVE-IN DOORS:	2 POSITIONS
DOCK DOORS:	35 POSITIONS

◀ DOCK HIGH TRUCK DOOR

○ GRADE LEVEL TRUCK DOOR

This conceptual design is based upon a preliminary review of entitlement requirements and on unverified and possibly incomplete site and/or building information, and is intended merely to assist in exploring how the project might be developed.

1" = 60'

0 30 60 120 300

NORTH

HAMILTON PARTNERS

SCHEME : 8

Proposed Site Plan

WHEELING DISTRIBUTION CENTER

WHEELING, IL

Exhibit received September 21, 2016

WARE MALCOMB

CHI16-0026-00

09.20.2016

SHEET

2

North West Building Perspective

KEY NOTES

1. STRUCTURAL PRE-CASET CONCRETE PANELS WITH 3/4" REVEALS TYPICAL. ANTI GRAFFITI SEAL / PAINT 1, PAINT 2, ACCENT COLOR PAINT 3
2. DUAL HIGH PERFORMANCE VISION GLASS CLEARSTORY GLAZING
3. DUAL HIGH PERFORMANCE VISION GLASS
4. STOREFRONT WINDOW WITH 2" ANODIZED ALUMINUM MULLIONS (ARCADIA AB-1)

HAMILTON PARTNERS

SCHEME : 1

Proposed Building Design

Exhibit received September 21, 2016

WHEELING DISTRIBUTION CENTER
WHEELING, IL

WARE MALCOMB

CHI16-0026-00
09.20.2016

SHEET
3

North East Building Perspective

HAMILTON PARTNERS

SCHEME : 1

Proposed Building Design

Exhibit received September 21, 2016

WHEELING DISTRIBUTION CENTER
WHEELING, IL

WARE MALCOMB

CHI16-0026-00
09.20.2016

SHEET
4

North Building Elevation

East Building Elevation

HAMILTON PARTNERS

SCHEME : 1

Proposed Building Elevations

Exhibit received September 21, 2016

WHEELING DISTRIBUTION CENTER
WHEELING, IL

WARE MALCOMB

CHI16-0026-00
09.20.2016

SHEET
5

South Building Elevation

West Building Elevation

HAMILTON PARTNERS

SCHEME : 1

Exhibit received October 31, 2016

Proposed Building Elevations

WHEELING DISTRIBUTION CENTER
WHEELING, IL

WARE MALCOMB

CHI16-0026-00
10. 31 .2016

SHEET
6

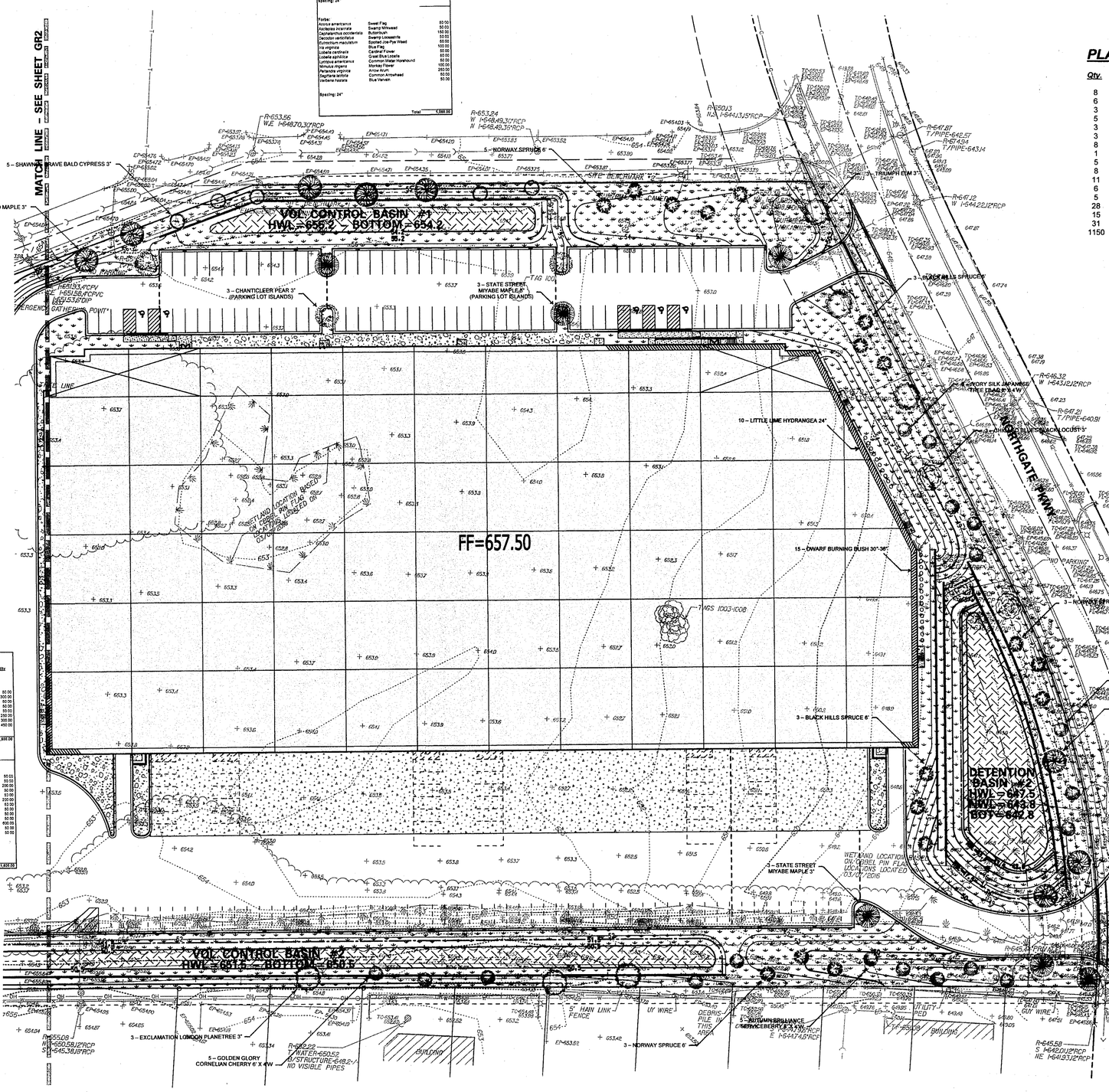

Emergent Wetland	(Plugs)	
Botanical Name	**Common Name**	**Quantity**
Permanent Grasses/Sedges/Rushes:		
Carex lacustris	Common Lake Sedge	50.00
Carex lurida	Bottlebrush Sedge	150.00
Carex stricta	Common Tussock Sedge	50.00
Eleocharis palustris	Creat Spike Rush	50.00
Juncus effusus	Common Rush	50.00
Leersia oryzoides	Rice Cut Grass	150.00
Schoenoplectus americanus	Chairmaker's Rush	100.00
Schoenoplectus tabernaemo	Softstem Bulrush	300.00
	Total	950.00
Spacing: 24"		
Forbs:		
Acorus americanus	Sweet Flag	50.00
Asclepias incarnata	Swamp Milkweed	50.00
Cephalanthus occidentalis	Buttonbush	150.00
Decodon verticillatus	Swamp Loosestrife	50.00
Eutrochium maculatum	Spotted Joe-Pye Weed	50.00
Iris virginica	Blue Flag	100.00
Lobelia cardinalis	Cardinal Flower	50.00
Lobelia siphilitica	Great Blue Lobelia	50.00
Lycopus americanus	Common Water Horehound	50.00
Mimulus ringens	Monkey Flower	50.00
Peltandra virginica	Arrow Arum	50.00
Sagittaria latifolia	Common Arrowhead	50.00
Verbena hastata	Blue Vervain	50.00
Spacing: 24"		
	Total	1,050.00

Emergent Wetland	(Plugs)	
Botanical Name	**Common Name**	**Quantity**
Permanent Grasses/Sedges/Rushes:		
Carex lacustris	Common Lake Sedge	50.00
Carex lurida	Bottlebrush Sedge	300.00
Carex stricta	Common Tussock Sedge	50.00
Eleocharis palustris	Creat Spike Rush	50.00
Juncus effusus	Common Rush	50.00
Leersia oryzoides	Rice Cut Grass	250.00
Schoenoplectus americanus	Chairmaker's Rush	300.00
Schoenoplectus tabernaemo	Softstem Bulrush	450.00
	Total	1,500.00
Spacing: 24"		
Forbs:		
Acorus americanus	Sweet Flag	50.00
Asclepias incarnata	Swamp Milkweed	50.00
Cephalanthus occidentalis	Buttonbush	200.00
Decodon verticillatus	Swamp Loosestrife	50.00
Eutrochium maculatum	Spotted Joe-Pye Weed	50.00
Iris virginica	Blue Flag	200.00
Lobelia cardinalis	Cardinal Flower	50.00
Lobelia siphilitica	Great Blue Lobelia	50.00
Lycopus americanus	Common Water Horehound	50.00
Mimulus ringens	Monkey Flower	50.00
Peltandra virginica	Arrow Arum	600.00
Sagittaria latifolia	Common Arrowhead	50.00
Verbena hastata	Blue Vervain	50.00
Spacing: 24"		
	Total	1,600.00

Emergent Wetland	(Plugs)	
Botanical Name	**Common Name**	**Quantity**
Permanent Grasses/Sedges/Rushes:		
Carex lacustris	Common Lake Sedge	50.00
Carex lurida	Bottlebrush Sedge	400.00
Carex stricta	Common Tussock Sedge	100.00
Eleocharis palustris	Creat Spike Rush	100.00
Juncus effusus	Common Rush	100.00
Leersia oryzoides	Rice Cut Grass	300.00
Schoenoplectus americanus	Chairmaker's Rush	300.00
Schoenoplectus tabernaemo	Softstem Bulrush	550.00
	Total	1,950.00
Spacing: 24"		
Forbs:		
Acorus americanus	Sweet Flag	50.00
Asclepias incarnata	Swamp Milkweed	50.00
Cephalanthus occidentalis	Buttonbush	200.00
Decodon verticillatus	Swamp Loosestrife	50.00
Eutrochium maculatum	Spotted Joe-Pye Weed	50.00
Iris virginica	Blue Flag	300.00
Lobelia cardinalis	Cardinal Flower	50.00
Lobelia siphilitica	Great Blue Lobelia	50.00
Lycopus americanus	Common Water Horehound	50.00
Mimulus ringens	Monkey Flower	50.00
Peltandra virginica	Arrow Arum	800.00
Sagittaria latifolia	Common Arrowhead	50.00
Verbena hastata	Blue Vervain	50.00
Spacing: 24"		
	Total	1,800.00

PLANT LIST

Qty.	Common Name	Botanical Name	Size	Remarks
8	Marmo Maple	Acer freemanii 'Marmo'	3"	B&B
6	State Street Miyabe Maple	Acer miyabei 'Morton'	3"	B&B
3	Exclamation London Planetree	Platanus acerifolia 'Morton Circle'	3"	B&B
5	Chanticleer Pear	Pyrus calleryana 'Chanticleer'	3"	B&B
3	Chicago Blues Black Locust	Robinia pseudoacacia 'Chicago Blues'	3"	B&B
3	Triumph Elm	Ulmus carpinifolia 'Morton Glossy'	3"	B&B
8	Autumn Brilliance Serviceberry	Amelanchier grandiflora	6' x 4'w	B&B
1	Covey Weeping Redbud	Cercis canadensis 'Covey'	2 ½"	B&B
5	Golden Glory Cornelian Cherry	Cornus mas 'Golden Glory'	6' x 4'w	B&B
8	Ivory Silk Japanese Tree Lilac	Syringa reticulata 'Ivory Silk'	6' x 4'w	B&B
11	Norway Spruce	Picea abies	6'	B&B
6	Black Hills Spruce	Picea glauca 'Densata'	6'	B&B
5	Shawnee Brave Bald Cypress	Taxodium distichum 'Shawnee Brave'	3"	B&B
28	Green Gem Boxwood	Buxus 'Green Gem'	24"	Cont.
15	Dwarf Burning Bush	Euonymus alata 'Compacta'	30"-36"	B&B
31	Little Lime Hydrangea	Hydrangea paniculata 'Jane'	24"	Cont.
1150	Purpleleaf Wintercreeper	Euonymus fortunei 'Coloratus'	3"	Pots

Exhibit received September 21, 2016

REVISIONS	BY
08.31.16	
09.20.16	

Dowden Landscape Design
P.O.Box 415, Libertyville, IL 60048
Phone: (847) 362-1254
Email: dowdenassoc@sbcglobal.net

PROPOSED OFFICE/WAREHOUSE

LANDSCAPE PLAN

750 NORTHGATE PARKWAY
WHEELING, ILLINOIS

Date 08.25.16

Scale 1"=40'

Drawn CJD

Job

Sheet L – 1.0

Emergent Wetland	(Plugs)	
Botanical Name	**Common Name**	**Quantity**
Permanent Grasses/Sedges/Rushes:		
Carex lacustris	Common Lake Sedge	100.00
Carex lurida	Bottlebrush Sedge	500.00
Carex stricta	Common Tussock Sedge	100.00
Eleocharis palustris	Great Spike Rush	100.00
Juncus effusus	Common Rush	100.00
Leersia oryzoides	Rice Cut Grass	400.00
Schoenoplectus americanus	Chairmaker's Rush	400.00
Schoenoplectus tabernaemo	Softstem Bulrush	750.00
	Total	2,950.00
Spacing: 24"		
Forbs:		
Acorus americanus	Sweet Flag	50.00
Asclepias incarnata	Swamp Milkweed	100.00
Cephalanthus occidentalis	Buttonbush	400.00
Decodon verticillatus	Swamp Loosestrife	50.00
Eutrochium maculatum	Spotted Joe-Pye Weed	50.00
Iris virginica	Blue Flag	400.00
Lobelia cardinalis	Cardinal Flower	50.00
Lobelia siphilitica	Great Blue Lobelia	100.00
Lycopus americanus	Common Water Horehound	50.00
Mimulus ringens	Monkey Flower	50.00
Peltandra virginica	Arrow Arum	1,150.00
Sagittaria latifolia	Common Arrowhead	50.00
Verbena hastata	Blue Vervain	50.00
Spacing: 24"		
	Total	2,950.00

Emergent Wetland	(Plugs)	
Botanical Name	**Common Name**	**Quantity**
Permanent Grasses/Sedges/Rushes:		
Carex lacustris	Common Lake Sedge	100.00
Carex lurida	Bottlebrush Sedge	500.00
Carex stricta	Common Tussock Sedge	100.00
Eleocharis palustris	Great Spike Rush	100.00
Juncus effusus	Common Rush	100.00
Leersia oryzoides	Rice Cut Grass	400.00
Schoenoplectus americanus	Chairmaker's Rush	400.00
Schoenoplectus tabernaemo	Softstem Bulrush	750.00
	Total	2,950.00
Spacing: 24"		
Forbs:		
Acorus americanus	Sweet Flag	50.00
Asclepias incarnata	Swamp Milkweed	100.00
Cephalanthus occidentalis	Buttonbush	400.00
Decodon verticillatus	Swamp Loosestrife	50.00
Eutrochium maculatum	Spotted Joe-Pye Weed	50.00
Iris virginica	Blue Flag	400.00
Lobelia cardinalis	Cardinal Flower	50.00
Lobelia siphilitica	Great Blue Lobelia	100.00
Lycopus americanus	Common Water Horehound	50.00
Mimulus ringens	Monkey Flower	50.00
Peltandra virginica	Arrow Arum	1,150.00
Sagittaria latifolia	Common Arrowhead	50.00
Verbena hastata	Blue Vervain	50.00
Spacing: 24"		
	Total	2,950.00

Emergent Wetland	(Plugs)	
Botanical Name	**Common Name**	**Quantity**
Permanent Grasses/Sedges/Rushes:		
Carex lacustris	Common Lake Sedge	50.00
Carex lurida	Bottlebrush Sedge	250.00
Carex stricta	Common Tussock Sedge	50.00
Eleocharis palustris	Great Spike Rush	50.00
Juncus effusus	Common Rush	50.00
Leersia oryzoides	Rice Cut Grass	200.00
Schoenoplectus americanus	Chairmaker's Rush	200.00
Schoenoplectus tabernaemo	Softstem Bulrush	350.00
	Total	1,350.00
Spacing: 24"		
Forbs:		
Acorus americanus	Sweet Flag	50.00
Asclepias incarnata	Swamp Milkweed	50.00
Cephalanthus occidentalis	Buttonbush	100.00
Decodon verticillatus	Swamp Loosestrife	50.00
Eutrochium maculatum	Spotted Joe-Pye Weed	50.00
Iris virginica	Blue Flag	50.00
Lobelia cardinalis	Cardinal Flower	50.00
Lobelia siphilitica	Great Blue Lobelia	50.00
Lycopus americanus	Common Water Horehound	50.00
Mimulus ringens	Monkey Flower	50.00
Peltandra virginica	Arrow Arum	450.00
Sagittaria latifolia	Common Arrowhead	50.00
Verbena hastata	Blue Vervain	50.00
Spacing: 24"		
	Total	1,350.00

REVISIONS	BY
08.31.16	
09.20.16	

Dowden Landscape Design
P.O.Box 415, Libertyville, IL 60048
Phone: (847) 362-1254
Email: dowdenassoc@sbcglobal.net

PROPOSED OFFICE/WAREHOUSE LANDSCAPE PLAN

750 NORTHGATE PARKWAY
WHEELING, ILLINOIS

Date	08.25.16
Scale	1"=40'
Drawn	CJD
Job	
Sheet	L – 2.0

Exhibit received September 21, 2016

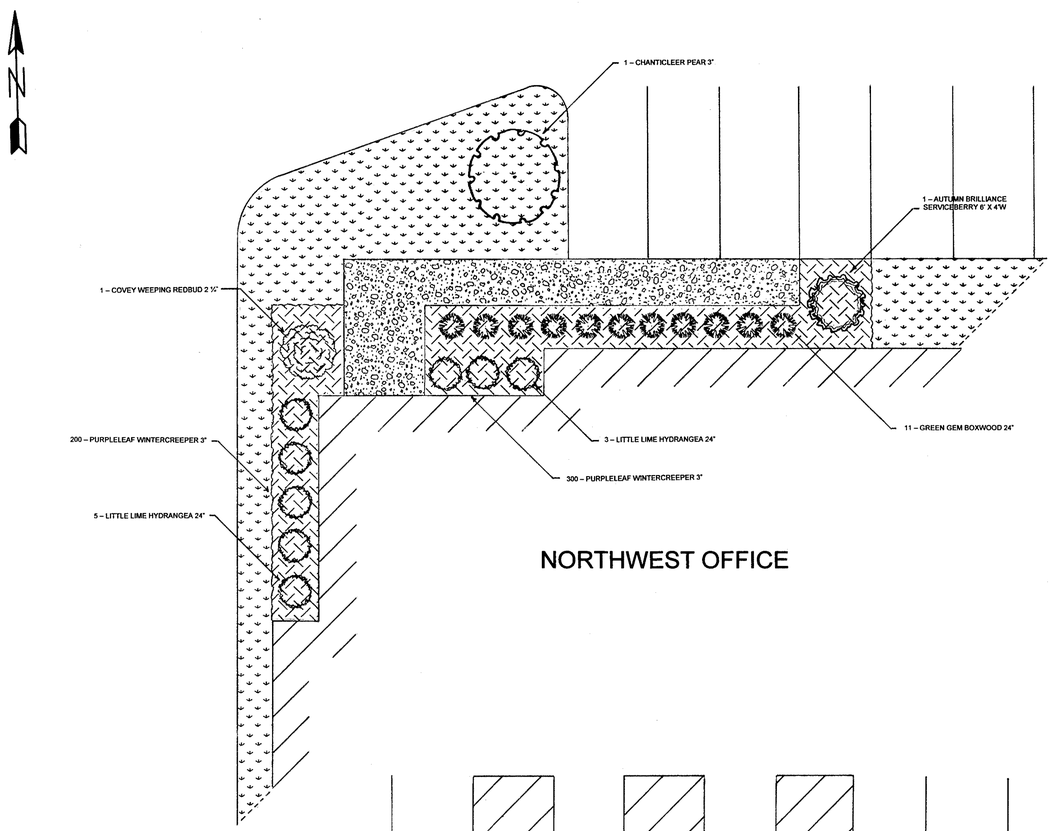

NORTHWEST OFFICE

No Mow with Annual Rye Item #50092	Percent	Origin	Germ
Shadow II Chewings Fescue - Festuca commutata	23.69%	OR	80%
Quatro Sheep Fescue - Festuca ovina	23.35%	OR	85%
Sword Hard Fescue – Festuca brevipila (F. longifolia)	11.73%	WA	85%
Henry Hard Fescue – Festuca brevipila (F. longifolia)	11.89%	OR	85%
Sea Fire Slender Creeping Red Fescue - Festuca rubra	11.79%	OR	85%
Lustrous Creeping Red Fescue - F. rubra, subsp. rubra	11.89%	OR	85%
Gulf Annual Ryegrass - Lolium multiflorum	3.92%	OR	90%

1.69% Inert Matter
0.03% Other Crop Seed
0.02% Weed Seed
Noxious Weed Seed: None Found
Tested: December 2015
Lot Number: COL-16-3015

Notes:

1) The Contractor shall provide and install all plant materials in quantities sufficient to complete planting shown on the drawing. All plants shall comply with the requirements of the current American Standard for Nursery Stock, published by the American Nursery and Landscape Association. Plants shall meet size, genus, species and variety and be in good health, free of insects, diseases or defects. No "park grade" material shall be accepted. Trees not exhibiting a central (or single) leader will be rejected unless called out in the plant list as multi-stem. Quantity lists are supplied as a convenience. The Contractor shall verify all quantities and, in case of a discrepancy, the plan shall prevail. No plants are to be changed or substituted without approval from a representative of James Dowden & Associates, Inc.

2) All plants shall be watered during the first 24-hour period after installation. A watering schedule must be agreed upon with the Owner, before plantings are installed, of whom, when and how plant materials are to be properly watered. The Contractor is responsible for site visits to ensure the proper watering is being done for establishment and health of all plant materials.

3) Plants shall be balled and burlapped unless otherwise noted on the landscape plan. Not root bound material shall be accepted and all wrapping materials made of synthetics or plastics shall be removed at the time of planting. It is the Contractor's option to roll back burlap from the top of the root ball.

4) Recommended mulch depth is 4" of shredded hardwood bark. The Contractor shall avoid over mulching and the creation of "mulch volcanoes". Mulch beds shall extend a minimum of two feet beyond the center of a tree or shrub. Mulch must be pulled at least two inches from the base of a tree so the base of the trunk and root crown are exposed.

5) Prepare perennial beds with one cubic yard of garden compost per 100 sf. The compost shall be rototilled to an 8" depth.

6) All plants shall be set plumb. It is the Contractor's option to stake deciduous trees but it is also the Contractor's responsibility to ensure plants remain plumb until the end of the guarantee period. All deciduous trees shall be wrapped with an approved tree wrap to prevent winter damage. The Contractor shall remove all tree wrap following the first winter.

7) Trees shall be installed a minimum of five (5) feet horizontally from underground electrical feeders, sanitary sewers, sanitary services, water mains, and water services. Trees shall be installed a minimum of ten (10) feet horizontally from utility structures and appurtenances, including, but not limited to, manholes, valve vaults, valve boxes and fire hydrants.

8) The Contractor shall locate the existence of all underground utilities prior to starting work. The Contractor must also keep the pavement and work areas in neat and orderly condition throughout the construction process. The Contractor shall acquaint himself with, and verify, working conditions in advance of submitting a proposal. Failure to recognize inherent responsibilities does not relieve the Contractor of his obligations due to miscalculations.

9) All turf restoration shall include top soil, finish grading, premium bluegrass mix seed and straw blanket, or equivalent, in all disturbed areas.

PREMIUM BLUEGRASS MIX 4-5 LBS PER 1,000 SQ FT
20% MIDNIGHT KENTUCKY BLUEGRASS
20% DENIM KENTUCKY BLUEGRASS
20% LANGARA KENTUCKY BLUEGRASS
20% BLUESTAR KENTUCKY BLUEGRASS
10% PRIZM PERENNIAL RYEGRASS
10% SUNSHINE PERENNIAL RYEGRASS

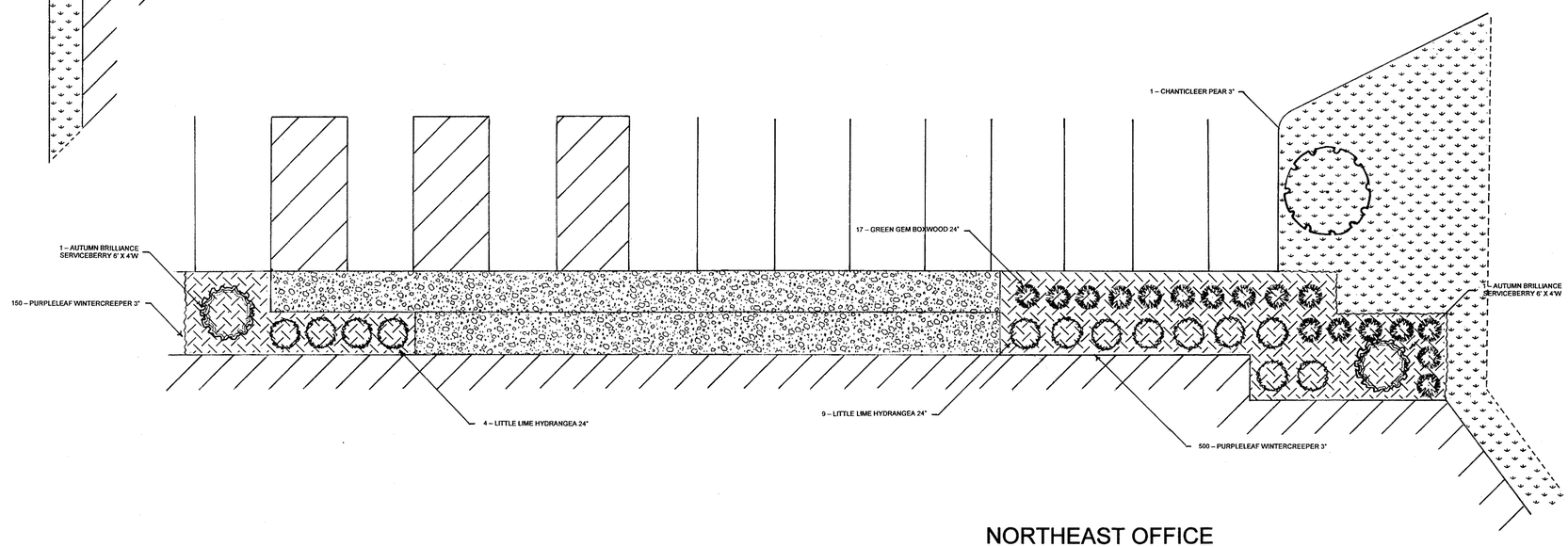

NORTHEAST OFFICE

Exhibit received September 21, 2016

REVISIONS	BY
08.31.16	
09.20.16	

Dowden Landscape Design
P.O.Box 415, Libertyville, IL 60048
Phone: (847) 362-1254
Email: dowdenassoc@sbcglobal.net

PROPOSED OFFICE/WAREHOUSE
LANDSCAPE PLAN
750 NORTHGATE PARKWAY
WHEELING, ILLINOIS

Date 08.25.16
Scale 1/8"=1"
Drawn CJD
Job
Sheet L – 3.0

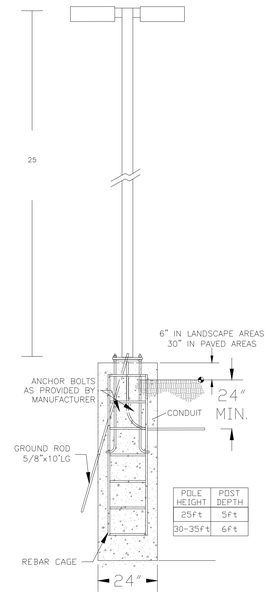

POLE HEIGHT	POST DEPTH
25ft	5ft
30-35ft	6ft

POLE BASE DETAIL NO SCALE

LIGHTING FIXTURE SCHEDULE

TYPE	MANUFACTURER & CATALOG NUMBER	LAMP TYPE AND QUANTITY	NOTES
–	–	–	–
B	LITHONIA DSX2 LED 80C 1000 40K T3M RPD9/RTA 25 7E	LED	2, 4
C	LITHONIA DSX2 LED 100C 1000 40K T3M RPD9/RTA 25 7E	LED	2, 4
D	LITHONIA DSX2 100C 1000 40K TFTM WBD9	LED	1, 2, 3
E	LITHONIA DSX2 80C 1000 40K T3M HS RPD9/RTA 25 7E	LED	2, 4
F	LITHONIA DSX2 LED 80C 700 40K T3M	LED	1, 2, 3

LIGHTING FIXTURE SCHEDULE NOTES.

1. MOUNT 24" ± BELOW TOP OF PRECAST PANEL. VERIFY EXACT PLACEMENT WITH ARCHITECT.
2. BULDING MOUNTED FIXTURES TO BE CONTROLED BY PEC. POLE ASSEMBLIES TO BE TURNED ON BY PEC, OFF BY TIME CLOCK.
3. PROVIDE WHITE FINISH ON ALL BUILDING MOUNTED EXTERIOR FIXTURES.
4. PROVIDE 24" CONCRETE BASE. SEE DETAIL.

STATISTICS

Description	Symbol	Avg	Max	Min	Max/Min	Avg/Min
Auto Parking	×	2.4 fc	5.5 fc	0.7 fc	7.9:1	3.4:1
Perimeter	+	0.1 fc	0.6 fc	0.0 fc	N / A	N / A
Future Auto	×	2.3 fc	8.9 fc	0.7 fc	12.7:1	3.3:1

GENERAL NOTES

1. STATISTICS ARE BASED ON PAVED AREAS ONLY.
2. ILLUMINATION VALUES ARE FOR SPECIFIED AREA LIGHTS ONLY. SECURITY LIGHTING IS NOT INCLUDED IN DATA. SUBSTITUTION OF FIXTURES SHALL VOID THIS DATA.
3. DATA IS BASED ON BUILDING REFELECTANCE OF 15 PERCENT
4. VEILING LUMINANCE IS NOT CONSIDERED.
5. LIGHT LOSS FACTOR USED FOR THESE CALCULATIONS IS .80.

SITE ILLUMINATION PLAN

SCALE 1" = 40'

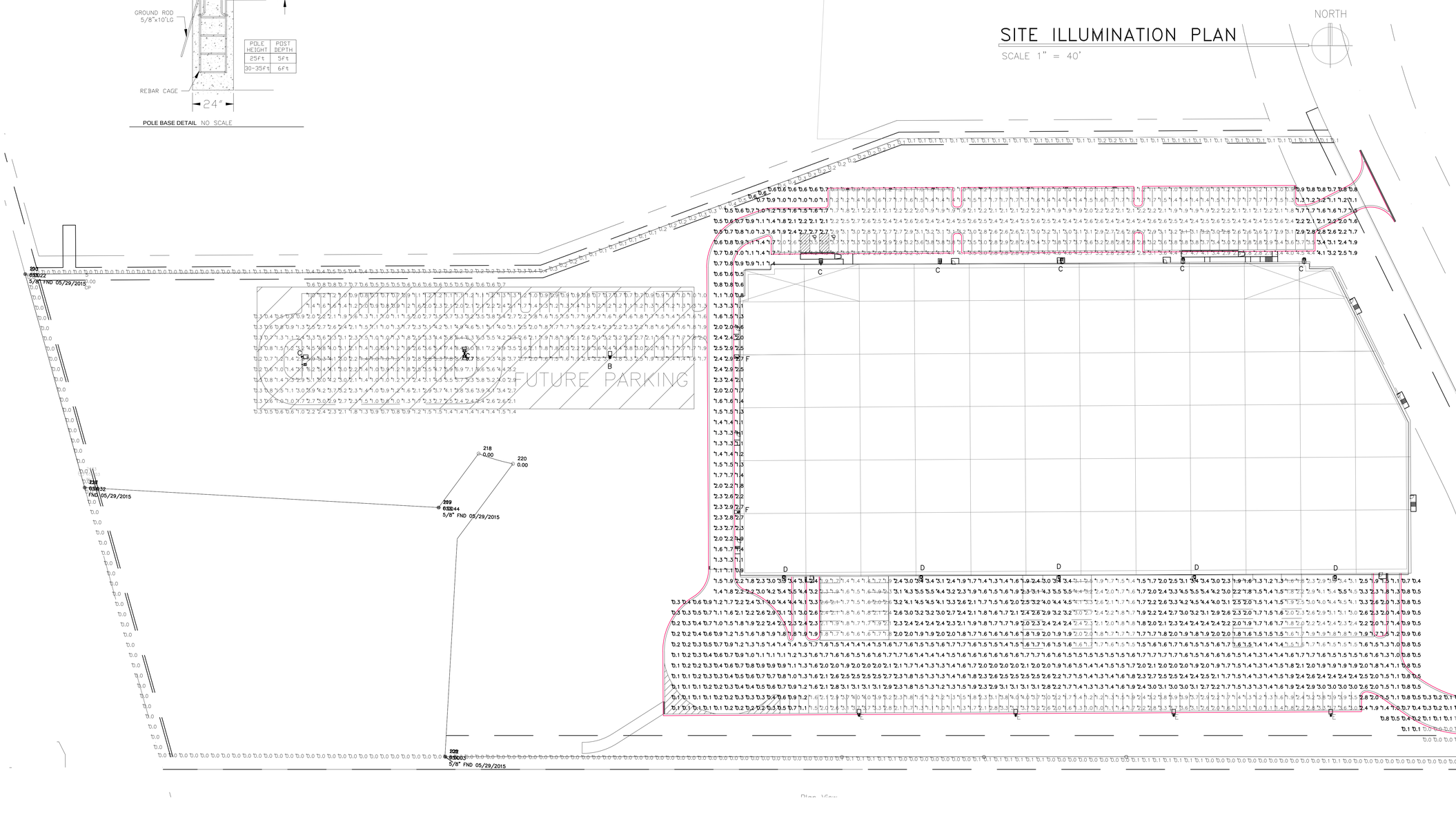

PROPOSED EXTERIOR LIGHTING FOR;

750 NORTHGATE

WHEELING ILLINOIS

REVISIONS:
9/12/16

Exhibit received September 21, 2016

DATE
8/19/2016

JOB
–

SHEET NO.
SL1

d#series

D-Series Size 2
LED Area Luminaire

Catalog Number

Notes

Type

Hit the Tab key or mouse over the page to see all interactive elements.

Specifications

EPA: 1.1 ft² (0.10 m²)

Length: 40″ (101.6 cm)

Width: 15″ (38.1 cm)

Height: 7-1/4″ (18.4 cm)

Weight (max): 36 lbs (16.3 kg)

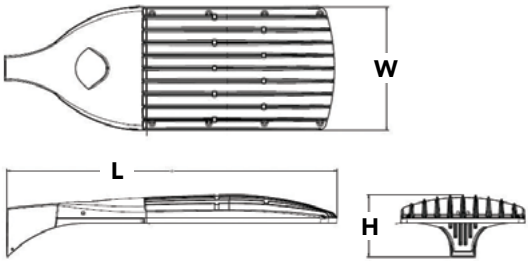

Introduction

The modern styling of the D-Series is striking yet unobtrusive - making a bold, progressive statement even as it blends seamlessly with its environment.

The D-Series distills the benefits of the latest in LED technology into a high performance, high efficacy, long-life luminaire. The outstanding photometric performance results in sites with excellent uniformity, greater pole spacing and lower power density. The Size 2 is ideal for replacing 400-1000W metal halide in area lighting applications with energy savings of up to 80% and expected service life of over 100,000 hours.

Ordering Information

EXAMPLE: DSX2 LED 80C 1000 40K T4M MVOLT SPA DDBXD

DSX2 LED

Series	LEDs	Drive current	Color temperature	Distribution	Voltage	Mounting
DSX2 LED	**Forward optics** 80C 80 LEDs (four engine) 100C 100 LEDs (four engines) **Rotated optics** [1] 90C 90 LEDs	530 530 mA 700 700 mA 1000 1000 mA (1 A)[2] 1200 1200 mA[2] (1.2 A)	30K 3000 K 40K 4000 K 50K 5000 K AMBPC Amber phosphor converted[3]	T1S Type I Short T2S Type II Short T2M Type II Medium T3S Type III Short T3M Type III Medium T4M Type IV Medium TFTM Forward Throw Medium T5VS Type V Very Short T5S Type V Short T5M Type V Medium T5W Type V Wide BLC Backlight control[2,4] LCCO Left corner cutoff[2,4] RCCO Right corner cutoff[2,4]	MVOLT [5] 120 [5] 208 [5] 240 [5] 277 [5] 347 [6] 480 [6]	**Shipped included** SPA Square pole mounting RPA Round pole mounting WBA Wall bracket SPUMBA Square pole universal mounting adaptor [7] RPUMBA Round pole universal mounting adaptor [7] **Shipped separately** KMA8 DDBXD U Mast arm mounting bracket adaptor (specify finish) [8]

Control options			Other options	Finish *(required)*
Shipped installed PER NEMA twist-lock receptacle only (no controls) [9] PER5 Five-wire receptacle only (no controls) [9,10] PER7 Seven-wire receptacle only (no controls) [9,10] DMG 0-10V dimming driver (no controls) [11] DCR Dimmable and controllable via ROAM® (no controls) [12] DS Dual switching [13,14] PIRH Bi-level, motion/ambient sensor, 15-30′ mounting height, ambient sensor enable at 5fc [15]	PIRH1FC3V Bi-level, motion sensor, 15′-30′ mounting height, ambient sensor enabled at 1fc [15] BL30 Bi-level switched dimming, 30% [14,16] BL50 Bi-level switched dimming, 50% [14,16] PNMTDD3 Part night, dim till dawn [17] PNMT5D3 Part night, dim 5 hrs [17] PNMT6D3 Part night, dim 6 hrs [17] PNMT7D3 Part night, dim 7 hrs [17] FAO Field Adjustable Output [18]	**Shipped installed** HS House-side shield [19] SF Single fuse (120, 277, 347V) [5] DF Double fuse (208, 240, 480V) [5] L90 Left rotated optics [20] R90 Right rotated optics [20] BS Bird spikes [21]	DDBXD Dark bronze DBLXD Black DNAXD Natural aluminum DWHXD White DDBTXD Textured dark bronze DBLBXD Textured black DNATXD Textured natural aluminum DWHGXD Textured white

Accessories

Ordered and shipped separately.

Controls & Shields

DLL127F 1.5 JU	Photocell - SSL twist-lock (120-277V) [22]
DLL347F 1.5 CUL JU	Photocell - SSL twist-lock (347V) [22]
DLL480F 1.5 CUL JU	Photocell - SSL twist-lock (480V) [22]
DSHORT SBK U	Shorting cap [22]
DSX2HS 80C U	House-side shield for 80 LED unit [19]
DSX2HS 90C U	House-side shield for 90 LED unit [19]
DSX2HS 100C U	House-side shield for 100 LED unit [19]
PUMBA DDBXD U*	Square and round pole universal mounting bracket (specify finish) [23]
KMA8 DDBXD U	Mast arm mounting bracket adaptor (specify finish) [8]
DSX2BS U	Bird spikes

For more control options, visit DTL and ROAM online.

NOTES

1 Rotated optics option (L90 or R90) required for 90C.
2 Not available in AMBPC.
3 Only available with 530mA or 700mA.
4 Not available with HS.
5 MVOLT driver operates on any line voltage from 120-277V (50/60 Hz). Single fuse (SF) requires 120V, 277V or 347V. Double fuse (DF) requires 208V, 240V or 480V.
6 Not available with BL30, BL50 or PNMT options.
7 Existing drilled pole only. Available as a separate combination accessory; for retrofit use only: PUMBA (finish) U; 1.5 G vibration load rating per ANCI C136.31.
8 Must be ordered as a separate accessory; see Accessories information. For use with 2-3/8″ mast arm (not included).
9 Photocell ordered and shipped as a separate line item from Acuity Brands Controls. See accessories. Not available with DS option.
10 If ROAM® node required, it must be ordered and shipped as a separate line item from Acuity Brands Controls. Not available with DCR. Node with integral dimming.
11 DMG option for 347V or 480V requires 1000mA.
12 Specifies a ROAM® enabled luminaire with 0-10V dimming capability; PER option required. Additional hardware and services required for ROAM® deployment; must be purchased separately. Call 1-800-442-6745 or email: sales@roamservices.net. N/A with DS, PIRH, PER5, PER7, BL30, BL50 or PNMT options. Node without integral dimming.
13 Provides 50/50 luminaire operation via two independent drivers on two separate circuits. N/A with 80C 530, 90C 530, PER, PER5, PER7, DCR, BL30, BL50 or PNMT options.
14 Requires an additional switched circuit.
15 PIRH and PIRH1FC3V specify the SensorSwitch SBGR-6-ODP control; see Outdoor Control Technical Guide for details. Dimming driver standard. Not available with PER5 or PER7. Ambient sensor disabled when ordered with DCR. Separate on/off required
16 Dimming driver standard. MVOLT only. Not available with 347V, 480V, DCR, DS, PER5, PER7 or PNMT options. Not available with PIRH1PFC3V.
17 Dimming driver standard. MVOLT only. Not available with 347V, 480V, DCR, DS, PER5, PER7, BL30 or BL50. Not available with PIRH1FC3V. Separate on/off required.
18 Dimming driver standard. Not available with PER5, PER7, DMG, DCR, DS, BL30, BL50 or PNMT options, PIRH or PIRH1FC3V.
19 Not available with BLC, LCCO and RCCO distribution. Also available as a separate accessory; see Accessories information. Separate on/off required.
20 90 LEDs (90C option) only.
21 Also available as a separate accessory; see accessories information.
22 Requires luminaire to be specified with PER option. Ordered and shipped as a separate line item from Acuity Brands Controls.
23 For retrofit use only.

© 2011-2016 Acuity Brands Lighting, Inc. All rights reserved.

Exhibit received September 21, 2016

Drilling

Template #8

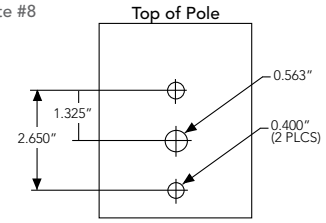

DSX2 shares a unique drilling pattern with the AERIS™ family. Specify this drilling pattern when specifying poles, per the table below.

DM19AS	Single unit	**DM29AS**	2 at 90° *
DM28AS	2 at 180°	**DM39AS**	3 at 90° *
DM49AS	4 at 90° *	**DM32AS**	3 at 120° **

Example: SSA 20 4C **DM19AS** DDBXD

Visit Lithonia Lighting's POLES CENTRAL to see our wide selection of poles, accessories and educational tools.
**Round pole top must be 3.25" O.D. minimum.*
***For round pole mounting (RPA) only.*

Tenon Mounting Slipfitter **

Tenon O.D.	Single Unit	2 at 180°	2 at 90°	3 at 120°	3 at 90°	4 at 90°
2-3/8"	AST20-190	AST20-280	AST20-290	AST20-320	AST20-390	AST20-490
2-7/8"	AST25-190	AST25-280	AST25-290	AST25-320	AST25-390	AST25-490
4"	AST35-190	AST35-280	AST35-290	AST35-320	AST35-390	AST35-490

Photometric Diagrams

To see complete photometric reports or download .ies files for this product, visit Lithonia Lighting's D-Series Area Size 2 homepage.

Isofootcandle plots for the DSX2 LED 80C 1000 40K. Distances are in units of mounting height (30').

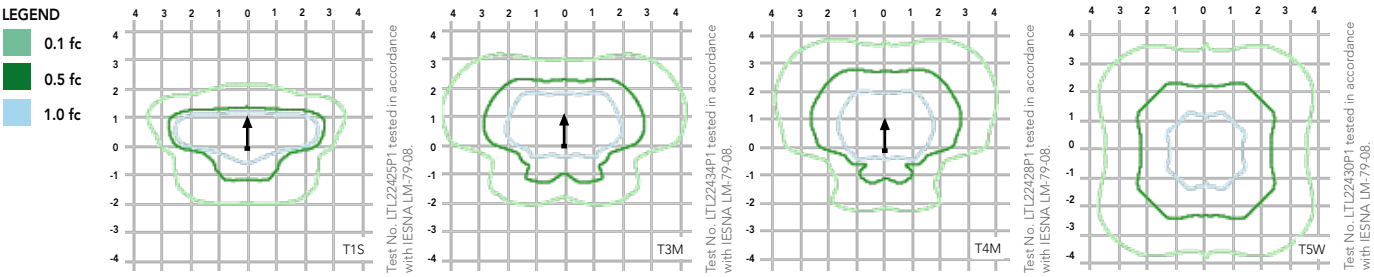

Performance Data

Lumen Ambient Temperature (LAT) Multipliers

Use these factors to determine relative lumen output for average ambient temperatures from 0-40°C (32-104°F).

Ambient		Lumen Multiplier
0°C	32°F	1.04
10°C	50°F	1.02
20°C	68°F	1.01
25°C	**77°F**	**1.00**
30°C	86°F	0.99
40°C	104°F	0.97

Projected LED Lumen Maintenance

Data references the extrapolated performance projections for the platforms noted in a **25°C ambient**, based on 10,000 hours of LED testing (tested per IESNA LM-80-08 and projected per IESNA TM-21-11).

To calculate LLF, use the lumen maintenance factor that corresponds to the desired number of operating hours below. For other lumen maintenance values, contact factory.

Operating Hours	0	25,000	50,000	100,000
Lumen Maintenance Factor	DSX2 LED 80C 1200			
	1.0	0.98	0.95	0.90
	DSX2 LED 100C 1000			
	1.0	0.98	0.95	0.90
	DSX2 LED 100C 1200			
	1.0	0.97	0.94	0.88

Electrical Load

			Current (A)					
LEDs	Drive Current (mA)	System Watts	120	208	240	277	347	480
80	530	137W	1.15	0.66	0.53	0.51	0.39	0.28
	700	188W	1.58	0.92	0.81	0.73	0.55	0.41
	1000	282W	2.37	1.35	1.18	1.04	0.83	0.61
100	530	175W	1.47	0.86	0.76	0.68	0.51	0.38
	700	232W	1.95	1.13	0.99	0.88	0.67	0.49
	1000	360W	3.03	1.72	1.49	1.3	1.05	0.77

© 2011-2016 Acuity Brands Lighting, Inc. All rights reserved.

Lumen Output

Lumen values are from photometric tests performed in accordance with IESNA LM-79-08. Data is considered to be representative of the configurations shown, within the tolerances allowed by Lighting Facts. Contact factory for performance data on any configurations not shown here.

Forward Optics

LEDs	Drive Current (mA)	System Watts	Dist. Type	30K (3000 K, 70 CRI)					40K (4000 K, 70 CRI)					50K (5000 K, 70 CRI)					AMBPC (Amber Phosphor Converted)				
				Lumens	B	U	G	LPW	Lumens	B	U	G	LPW	Lumens	B	U	G	LPW	Lumens	B	U	G	LPW
80C (80 LEDs)	530 mA	137 W	T1S	15,779	3	0	3	115	16,599	3	0	3	121	16,701	3	0	3	122	10,752	2	0	2	78
			T2S	16,270	3	0	3	119	17,115	3	0	3	125	17,220	3	0	3	126	10,554	2	0	2	77
			T2M	15,897	3	0	3	116	16,723	3	0	3	122	16,826	3	0	3	123	10,571	2	0	2	77
			T3S	15,877	3	0	3	116	16,702	3	0	3	122	16,805	3	0	3	123	10,548	2	0	2	77
			T3M	16,021	3	0	3	117	16,854	3	0	3	123	16,958	3	0	3	124	10,569	2	0	2	77
			T4M	16,239	3	0	3	119	17,083	3	0	3	125	17,188	3	0	3	125	10,547	2	0	2	77
			TFTM	15,996	3	0	3	117	16,827	3	0	3	123	16,931	3	0	3	124	10,741	1	0	2	78
			T5VS	16,899	4	0	1	123	17,776	4	0	1	130	17,886	4	0	1	131	11,155	3	0	0	81
			T5S	17,024	4	0	1	124	17,908	4	0	1	131	18,019	4	0	1	132	11,149	3	0	0	81
			T5M	17,053	4	0	2	124	17,939	4	0	2	131	18,050	4	0	2	132	11,096	3	0	2	81
			T5W	16,802	5	0	3	123	17,675	5	0	3	129	17,784	5	0	3	130	10,957	3	0	2	80
			BLC	12,283	1	0	2	90	13,190	1	0	2	96	13,272	2	0	2	97					
			LCCO	11,933	2	0	3	87	12,814	2	0	3	94	12,894	2	0	3	94					
			RCCO	11,933	2	0	3	87	12,814	2	0	3	94	12,894	2	0	3	94					
	700 mA	188 W	T1S	20,018	3	0	3	106	21,058	3	0	3	112	21,188	3	0	3	113	13,362	2	0	2	71
			T2S	20,640	3	0	3	110	21,712	3	0	3	115	21,846	3	0	3	116	13,116	2	0	2	70
			T2M	20,167	3	0	3	107	21,215	3	0	3	113	21,346	3	0	3	114	13,138	2	0	2	70
			T3S	20,142	3	0	3	107	21,188	3	0	3	113	21,319	3	0	3	113	13,110	2	0	2	70
			T3M	20,325	3	0	4	108	21,381	3	0	4	114	21,513	3	0	4	114	13,135	2	0	3	70
			T4M	20,601	3	0	4	110	21,672	3	0	4	115	21,805	3	0	4	116	13,108	2	0	2	70
			TFTM	20,293	3	0	4	108	21,348	3	0	4	114	21,479	3	0	4	114	13,349	2	0	2	71
			T5VS	21,438	4	0	1	114	22,551	4	0	1	120	22,690	4	0	1	121	13,864	3	0	1	74
			T5S	21,596	4	0	1	115	22,718	4	0	1	121	22,859	4	0	1	122	13,856	3	0	1	74
			T5M	21,634	5	0	3	115	22,758	5	0	3	121	22,898	5	0	3	122	13,790	3	0	2	73
			T5W	21,316	5	0	3	113	22,423	5	0	3	119	22,561	5	0	3	120	13,617	4	0	2	72
			BLC	15,637	2	0	2	83	16,791	2	0	3	89	16,896	2	0	3	90					
			LCCO	15,192	2	0	3	81	16,313	2	0	3	87	16,415	2	0	3	87					
			RCCO	15,192	2	0	3	81	16,313	2	0	3	87	16,415	2	0	3	87					
	1000 mA	282 W	T1S	27,547	3	0	3	98	28,978	3	0	3	103	29,157	3	0	3	103	18,125	2	0	2	64
			T2S	28,403	3	0	3	101	29,879	4	0	4	106	30,063	4	0	4	107	17,791	3	0	3	63
			T2M	27,753	3	0	4	98	29,195	3	0	4	104	29,375	3	0	4	104	17,821	3	0	3	63
			T3S	27,718	3	0	4	98	29,158	3	0	4	103	29,338	3	0	4	104	17,782	2	0	2	63
			T3M	27,970	3	0	5	99	29,423	4	0	5	104	29,605	4	0	5	105	17,817	3	0	3	63
			T4M	28,350	3	0	4	101	29,823	3	0	5	106	30,007	3	0	5	106	17,779	2	0	3	63
			TFTM	27,927	3	0	4	99	29,377	3	0	4	104	29,559	3	0	4	105	18,107	2	0	3	64
			T5VS	29,501	5	0	1	105	31,034	5	0	1	110	31,225	5	0	1	111	18,805	3	0	1	67
			T5S	29,720	5	0	2	105	31,264	5	0	2	111	31,457	5	0	2	112	18,794	3	0	1	67
			T5M	29,772	5	0	3	106	31,318	5	0	3	111	31,512	5	0	3	112	18,705	4	0	2	66
			T5W	29,333	5	0	4	104	30,857	5	0	4	109	31,048	5	0	4	110	18,740	4	0	2	66
			BLC	20,649	2	0	3	73	22,174	2	0	3	79	22,313	2	0	3	79					
			LCCO	20,061	3	0	3	71	21,542	3	0	3	76	21,677	3	0	3	77					
			RCCO	20,061	3	0	3	71	21,542	3	0	3	76	21,677	3	0	3	77					
	1200 mA	322 W	T1S	30,431	3	0	3	95	32,011	4	0	4	99	32,209	4	0	4	100					
			T2S	31,376	4	0	4	97	33,006	4	0	4	103	33,210	4	0	4	103					
			T2M	30,658	4	0	4	95	32,251	4	0	4	100	32,450	4	0	4	101					
			T3S	30,620	3	0	4	95	32,210	3	0	4	100	32,409	3	0	4	101					
			T3M	30,898	4	0	5	96	32,503	4	0	5	101	32,703	4	0	5	102					
			T4M	31,318	3	0	5	97	32,945	3	0	5	102	33,148	3	0	5	103					
			TFTM	30,850	3	0	4	96	32,452	3	0	5	101	32,652	3	0	5	101					
			T5VS	32,589	5	0	1	101	34,282	5	0	1	106	34,494	5	0	1	107					
			T5S	32,830	5	0	2	102	34,536	5	0	2	107	34,749	5	0	2	108					
			T5M	32,888	5	0	4	102	34,596	5	0	4	107	34,810	5	0	4	108					
			T5W	32,404	5	0	4	101	34,087	5	0	4	106	34,297	5	0	4	107					

© 2011-2016 Acuity Brands Lighting, Inc. All rights reserved.

Performance Data

Lumen Output

Lumen values are from photometric tests performed in accordance with IESNA LM-79-08. Data is considered to be representative of the configurations shown, within the tolerances allowed by Lighting Facts. Contact factory for performance data on any configurations not shown here.

L90 and R90 Rotated Optics

LEDs	Drive Current (mA)	System Watts	Dist. Type	30K (3000 K, 70 CRI)					40K (4000 K, 70 CRI)					50K (5000 K, 70 CRI)					AMBPC (Amber Phosphor Converted)				
				Lumens	B	U	G	LPW	Lumens	B	U	G	LPW	Lumens	B	U	G	LPW	Lumens	B	U	G	LPW
90C (90 LEDs)	530 mA	150 W	T1S	17,539	3	0	3	117	18,451	3	0	3	123	18,564	3	0	3	124	11,475	3	0	3	76
			T2S	18,084	3	0	3	121	19,024	3	0	3	127	19,141	3	0	3	128	11,448	3	0	3	76
			T2M	17,670	3	0	3	118	18,588	3	0	3	124	18,703	3	0	3	125	11,467	3	0	3	76
			T3S	17,648	3	0	3	118	18,565	3	0	3	124	18,680	3	0	3	125	11,442	3	0	3	76
			T3M	17,808	3	0	3	119	18,734	3	0	4	125	18,849	3	0	4	126	11,464	4	0	4	76
			T4M	18,051	3	0	4	120	18,988	3	0	4	127	19,106	3	0	4	127	11,440	4	0	4	76
			TFTM	17,781	3	0	3	119	18,704	3	0	3	125	18,820	3	0	3	125	11,651	4	0	4	78
			T5VS	18,783	4	0	1	125	19,759	4	0	1	132	19,881	4	0	1	133	12,289	3	0	1	82
			T5S	18,923	4	0	1	126	19,906	4	0	1	133	20,028	4	0	1	134	11,978	3	0	1	80
			T5M	18,956	4	0	2	126	19,940	4	0	2	133	20,063	4	0	2	134	12,301	4	0	2	82
			T5W	18,677	5	0	3	125	19,647	5	0	3	131	19,768	5	0	3	132	12,109	4	0	2	81
			BLC	16,949	4	0	4	113	18,200	4	0	4	121	18,314	4	0	4	122					
			LCCO	16,466	3	0	3	110	17,682	3	0	3	118	17,793	3	0	3	119					
			RCCO	16,466	3	0	3	110	17,682	3	0	3	118	17,793	3	0	3	119					
	700 mA	206 W	T1S	22,323	3	0	3	108	23,483	3	0	3	114	23,628	3	0	3	115	14,387	3	0	3	70
			T2S	23,017	3	0	3	112	24,213	3	0	3	118	24,362	3	0	3	118	14,354	3	0	3	70
			T2M	22,490	3	0	3	109	23,658	3	0	3	115	23,804	3	0	3	116	14,378	4	0	4	70
			T3S	22,462	3	0	3	109	23,629	3	0	3	115	23,774	3	0	3	115	14,347	4	0	4	70
			T3M	22,666	3	0	4	110	23,843	3	0	4	116	23,990	3	0	4	116	14,374	4	0	4	70
			T4M	22,974	3	0	4	112	24,167	3	0	4	117	24,317	3	0	4	118	14,344	4	0	4	70
			TFTM	22,630	3	0	4	110	23,806	3	0	4	116	23,953	3	0	4	116	14,609	4	0	4	71
			T5VS	23,906	5	0	1	116	25,148	5	0	1	122	25,304	5	0	1	123	15,408	4	0	1	75
			T5S	24,084	4	0	2	117	25,335	5	0	2	123	25,491	5	0	2	124	15,019	4	0	1	73
			T5M	24,126	5	0	3	117	25,379	5	0	3	123	25,536	5	0	3	124	15,424	4	0	2	75
			T5W	23,770	5	0	3	115	25,005	5	0	4	121	25,160	5	0	4	122	15,182	4	0	2	74
			BLC	21,577	4	0	4	105	23,170	4	0	4	112	23,315	4	0	4	113					
			LCCO	20,963	3	0	3	102	22,510	3	0	3	109	22,651	3	0	3	110					
			RCCO	20,963	3	0	3	102	22,510	3	0	3	109	22,651	3	0	3	110					
	1000 mA	320 W	T1S	30,621	3	0	3	96	32,212	4	0	4	101	32,411	4	0	4	101	19,288	4	0	4	60
			T2S	31,573	4	0	4	99	33,213	4	0	4	104	33,418	4	0	4	104	19,243	4	0	4	60
			T2M	30,850	4	0	4	96	32,453	4	0	4	101	32,653	4	0	4	102	19,275	4	0	4	60
			T3S	30,812	3	0	4	96	32,412	3	0	4	101	32,612	3	0	4	102	19,233	4	0	4	60
			T3M	31,091	4	0	5	97	32,706	4	0	5	102	32,908	4	0	5	103	19,270	4	0	4	60
			T4M	31,514	3	0	5	98	33,151	3	0	5	104	33,356	3	0	5	104	19,230	4	0	4	60
			TFTM	31,043	3	0	4	97	32,656	3	0	5	102	32,857	3	0	5	103	19,585	4	0	4	61
			T5VS	32,793	5	0	1	102	34,497	5	0	1	108	34,710	5	0	1	108	20,656	4	0	1	65
			T5S	33,036	5	0	2	103	34,752	5	0	2	109	34,967	5	0	2	109	20,135	4	0	1	63
			T5M	33,094	5	0	4	103	34,813	5	0	4	109	35,028	5	0	4	109	20,677	4	0	2	65
			T5W	32,607	5	0	4	102	34,301	5	0	4	107	34,512	5	0	4	108	20,354	5	0	3	64
			BLC	28,493	4	0	4	89	30,597	5	0	4	96	30,788	5	0	4	96					
			LCCO	27,682	3	0	4	87	29,726	3	0	4	93	29,912	3	0	4	93					
			RCCO	27,682	3	0	4	87	29,726	3	0	4	93	29,912	3	0	4	93					
	1200 mA	363 W	T1S	33,523	4	0	4	92	35,265	4	0	4	97	35,483	4	0	4	98					
			T2S	34,565	4	0	4	95	36,361	4	0	4	100	36,585	4	0	4	101					
			T2M	33,774	4	0	4	93	35,528	4	0	4	98	35,748	4	0	4	98					
			T3S	33,732	3	0	4	93	35,484	3	0	4	98	35,703	3	0	4	98					
			T3M	34,038	4	0	5	94	35,806	4	0	5	99	36,027	4	0	5	99					
			T4M	34,501	4	0	5	95	36,293	4	0	5	100	36,517	4	0	5	101					
			TFTM	33,985	3	0	5	94	35,750	3	0	5	98	35,971	3	0	5	99					
			T5VS	35,901	5	0	1	99	37,766	5	0	1	104	37,999	5	0	1	105					
			T5S	36,167	5	0	2	100	38,046	5	0	2	105	38,281	5	0	2	105					
			T5M	36,230	5	0	4	100	38,112	5	0	4	105	38,348	5	0	4	106					
			T5W	35,697	5	0	4	98	37,551	5	0	4	103	37,783	5	0	4	104					

© 2011-2016 Acuity Brands Lighting, Inc. All rights reserved.

Lumen Output

Lumen values are from photometric tests performed in accordance with IESNA LM-79-08. Data is considered to be representative of the configurations shown, within the tolerances allowed by Lighting Facts. Contact factory for performance data on any configurations not shown here.

Forward Optics (continued)

LEDs	Drive Current (mA)	System Watts	Dist. Type	30K (3000 K, 70 CRI)					40K (4000 K, 70 CRI)					50K (5000 K, 70 CRI)					AMBPC (Amber Phosphor Converted)				
				Lumens	B	U	G	LPW	Lumens	B	U	G	LPW	Lumens	B	U	G	LPW	Lumens	B	U	G	LPW
100C (100 LEDs)	530 mA	175 W	T1S	19,856	3	0	3	113	20,887	3	0	3	119	21,016	3	0	3	120	13,100	2	0	2	75
			T2S	20,473	3	0	3	117	21,537	3	0	3	123	21,670	3	0	3	124	12,859	2	0	2	73
			T2M	20,004	3	0	3	114	21,043	3	0	3	120	21,173	3	0	3	121	12,881	2	0	2	74
			T3S	19,979	3	0	3	114	21,017	3	0	3	120	21,147	3	0	3	121	12,853	2	0	2	73
			T3M	20,161	3	0	4	115	21,208	3	0	4	121	21,339	3	0	4	122	12,878	2	0	3	74
			T4M	20,435	3	0	4	117	21,496	3	0	4	123	21,629	3	0	4	124	12,851	2	0	2	73
			TFTM	20,129	3	0	3	115	21,175	3	0	4	121	21,306	3	0	4	122	13,088	2	0	2	75
			T5VS	21,264	4	0	1	122	22,369	4	0	1	128	22,507	4	0	1	129	13,592	3	0	1	78
			T5S	21,422	4	0	1	122	22,535	4	0	1	129	22,674	4	0	1	130	13,584	3	0	1	78
			T5M	21,459	5	0	3	123	22,574	5	0	3	129	22,713	5	0	3	130	13,520	3	0	2	77
			T5W	21,143	5	0	3	121	22,242	5	0	3	127	22,379	5	0	3	128	13,350	4	0	2	76
			BLC	19,032	2	0	3	109	20,438	2	0	3	117	20,565	2	0	3	118					
			LCCO	18,490	2	0	3	106	19,856	3	0	3	113	19,980	3	0	3	114					
			RCCO	18,490	2	0	3	106	19,856	3	0	3	113	19,980	3	0	3	114					
	700 mA	232 W	T1S	25,219	3	0	3	109	26,529	3	0	3	114	26,692	3	0	3	115	16,441	2	0	2	71
			T2S	26,002	3	0	3	112	27,353	3	0	3	118	27,522	3	0	3	119	16,138	2	0	2	70
			T2M	25,407	3	0	4	110	26,727	3	0	4	115	26,892	3	0	4	116	16,165	2	0	3	70
			T3S	25,375	3	0	3	109	26,693	3	0	4	115	26,858	3	0	4	116	16,130	2	0	2	70
			T3M	25,606	3	0	4	110	26,936	3	0	4	116	27,102	3	0	4	117	16,161	2	0	3	70
			T4M	25,954	3	0	4	112	27,302	3	0	4	118	27,471	3	0	4	118	16,127	2	0	3	70
			TFTM	25,566	3	0	4	110	26,897	3	0	4	116	27,060	3	0	4	117	16,425	2	0	2	71
			T5VS	27,007	5	0	1	116	28,410	5	0	1	122	28,586	5	0	1	123	17,058	3	0	1	74
			T5S	27,207	5	0	2	117	28,621	5	0	2	123	28,797	5	0	2	124	17,048	3	0	1	73
			T5M	27,255	5	0	3	117	28,671	5	0	3	124	28,848	5	0	3	124	16,967	4	0	2	73
			T5W	26,854	5	0	4	116	28,249	5	0	4	122	28,423	5	0	4	123	16,754	4	0	2	72
			BLC	24,229	2	0	3	104	26,018	2	0	4	112	26,181	2	0	4	113					
			LCCO	23,539	3	0	4	101	25,277	3	0	4	109	25,435	3	0	4	110					
			RCCO	23,539	3	0	4	101	25,277	3	0	4	109	25,435	3	0	4	110					
	1000 mA	360 W	T1S	34,490	4	0	4	96	36,281	4	0	4	101	36,505	4	0	4	101	22,196	3	0	3	62
			T2S	35,561	4	0	4	99	37,409	4	0	4	104	37,640	4	0	4	105	21,787	3	0	3	61
			T2M	34,747	4	0	4	97	36,552	4	0	4	102	36,778	4	0	4	102	21,824	3	0	3	61
			T3S	34,704	3	0	4	96	36,507	4	0	4	101	36,732	4	0	4	102	21,776	3	0	3	60
			T3M	35,019	4	0	5	97	36,838	4	0	5	102	37,065	4	0	5	103	21,819	3	0	3	61
			T4M	35,495	4	0	5	99	37,339	4	0	5	104	37,569	4	0	5	104	21,773	3	0	3	60
			TFTM	34,964	3	0	5	97	36,781	3	0	5	102	37,008	3	0	5	103	22,175	3	0	3	62
			T5VS	36,936	5	0	1	103	38,855	5	0	1	108	39,095	5	0	1	109	23,029	4	0	1	64
			T5S	37,209	5	0	2	103	39,142	5	0	2	109	39,384	5	0	2	109	23,016	4	0	1	64
			T5M	37,274	5	0	4	104	39,211	5	0	4	109	39,453	5	0	4	110	22,906	4	0	2	64
			T5W	36,726	5	0	4	102	38,634	5	0	4	107	38,872	5	0	4	108	22,619	4	0	2	63
			BLC	31,996	3	0	4	89	34,358	3	0	4	95	34,573	3	0	4	96					
			LCCO	31,085	3	0	4	86	33,380	3	0	4	93	33,588	3	0	4	93					
			RCCO	31,085	3	0	4	86	33,380	3	0	4	93	33,588	3	0	4	93					
	1200 mA	400 W	T1S	37,667	4	0	4	94	39,623	4	0	4	99	39,868	4	0	4	100					
			T2S	38,837	4	0	4	97	40,855	4	0	4	102	41,107	4	0	4	103					
			T2M	37,948	4	0	5	95	39,919	4	0	5	100	40,166	4	0	5	100					
			T3S	37,901	4	0	4	95	39,869	4	0	4	100	40,116	4	0	4	100					
			T3M	38,244	4	0	5	96	40,231	4	0	5	101	40,480	4	0	5	101					
			T4M	38,765	4	0	5	97	40,778	4	0	5	102	41,030	4	0	5	103					
			TFTM	38,185	3	0	5	95	40,169	4	0	5	100	40,417	4	0	5	101					
			T5VS	40,338	5	0	1	101	42,434	5	0	1	106	42,696	5	0	1	107					
			T5S	40,637	5	0	2	102	42,748	5	0	2	107	43,012	5	0	2	108					
			T5M	40,708	5	0	4	102	42,823	5	0	4	107	43,087	5	0	4	108					
			T5W	40,109	5	0	5	100	42,192	5	0	5	105	42,453	5	0	5	106					

© 2011-2016 Acuity Brands Lighting, Inc. All rights reserved.

FEATURES & SPECIFICATIONS

INTENDED USE
The sleek design of the D-Series Area Size 2 reflects the embedded high performance LED technology. It is ideal for applications like car dealerships and large parking lots adjacent to malls, transit stations, grocery stores, home centers, and other big-box retailers.

CONSTRUCTION
Single-piece die-cast aluminum housing has integral heat sink fins to optimize thermal management through conductive and convective cooling. Modular design allows for ease of maintenance and future light engine upgrades. The LED drivers are mounted in direct contact with the casting to promote low operating temperature and long life. Housing is completely sealed against moisture and environmental contaminants (IP65). Low EPA (1.1 ft^2) for optimized pole wind loading.

FINISH
Exterior parts are protected by a zinc-infused Super Durable TGIC thermoset powder coat finish that provides superior resistance to corrosion and weathering. A tightly controlled multi-stage process ensures a minimum 3 mils thickness for a finish that can withstand extreme climate changes without cracking or peeling. Available in both textured and non-textured finishes.

OPTICS
Precision-molded proprietary acrylic lenses are engineered for superior area lighting distribution, uniformity, and pole spacing. Light engines are available in 3000 K, 4000 K, or 5000 K (70 CRI) configurations. The D-Series Size 2 has zero uplight and qualifies as a Nighttime Friendly™ product, meaning it is consistent with the LEED® and Green Globes™ criteria for eliminating wasteful uplight.

ELECTRICAL
Light engine configurations consist of 80, 90 or 100 high-efficacy LEDs mounted to metal-core circuit boards to maximize heat dissipation and promote long life (up to L90/100,000 hrs at 25°C). Class 1 electronic drivers are designed to have a power factor >90%, THD <20%, and an expected life of 100,000 hours with <1% failure rate. Easily-serviceable surge protection device meets a minimum Category C Low operation (per ANSI/IEEE C62.41.2).

INSTALLATION
Included mounting block and integral arm facilitate quick and easy installation. Stainless steel bolts fasten the mounting block securely to poles and walls, enabling the D-Series Size 2 to withstand up to a 2.0 G vibration load rating per ANSI C136.31. The D-Series Size 2 utilizes the AERIS™ series pole drilling pattern (Template #8). NEMA photocontrol receptacle is available.

LISTINGS
UL Listed for wet locations. Light engines are IP66 rated; luminaire is IP65 rated. Rated for -40°C minimum ambient. U.S. Patent No. D670,857 S. International patent pending.

DesignLights Consortium® (DLC) qualified product. Not all versions of this product may be DLC qualified. Please check the DLC Qualified Products List at www.designlights.org to confirm which versions are qualified.

WARRANTY
5-year limited warranty. Complete warranty terms located at:
www.acuitybrands.com/CustomerResources/Terms_and_conditions.aspx

Note: Actual performance may differ as a result of end-user environment and application. All values are design or typical values, measured under laboratory conditions at 25 °C. Specifications subject to change without notice.

© 2011-2016 Acuity Brands Lighting, Inc. All rights reserved.

SITE IMPROVEMENT PLANS
for
800 NORTHGATE PARKWAY
WHEELING, ILLINOIS

PROJECT NO:1642.04

DEVELOPER
HAMILTON PARTNERS
300 PARK BLVD. SUITE 201
ITASCA, IL 60143
PH: (630) 250-9700
CONTACT: MIKE WAUTERLEK

ARCHITECT
WARE MALCOMB
1900 SPRING RD. SUITE 210
OAK BROOK, IL
PH: (630) 570-6760
CONTACT: CAMERON TREFRY

CALL J.U.L.I.E. 1–800–892–0123
WITH THE FOLLOWING:
COUNTY COOK
CITY, TOWNSHIP WHEELING
SEC. & ¼ SEC. NO. T42N, R11E, SEC3

48 HOURS BEFORE YOU DIG.
EXCLUDING SAT., SUN. & HOLIDAYS

BENCHMARK
ELEVATION:
DESCRIPTION: SEE SHEET GN FOR BENCHMARK INFORMATION

NOTE:
SPACECO, INC. IS TO BE NOTIFIED AT LEAST THREE (3) DAYS PRIOR TO STARTING CONSTRUCTION AND SHALL BE INCLUDED IN THE PRECONSTRUCTION MEETINGS

REVISIONS
ORIGINAL PLAN DATE: 09/16/2016

#	SHEET #	REMARKS	DATE

INDEX

SHEET #	SHEET I.D.	SHEET DESCRIPTION
1	C1	COVER SHEET
2	GN	TYPICAL SECTIONS AND GENERAL NOTES
3-4	ET1-ET2	EXISTING CONDITIONS PLAN
5-6	GM1-GM2	GEOMETRIC PLANS
7-8	GR1-GR2	GRADING PLANS
9-10	UT1-UT2	UTILITY PLANS
11-14	SE1-SE4	SOIL EROSION AND SEDIMENT CONTROL PLANS
15-17	S1-S3	SPECIFICATIONS
18-21	D1-D4	DETAILS
22	PDP	PROPOSED DRAINAGE PLAN

LOCATION MAP

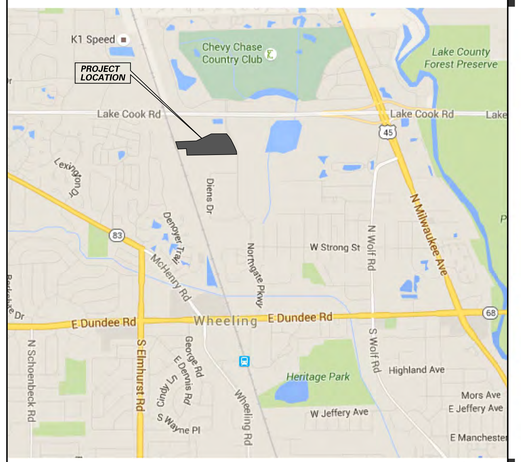

N.T.S.

KEY MAP

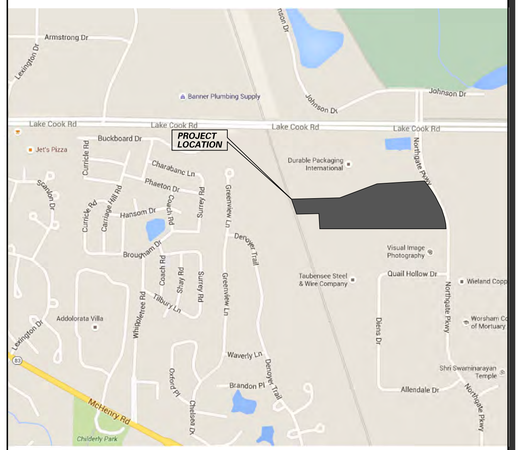

N.T.S.

ENGINEER
BRETT M. DUFFY, P.E.
09-16-16
DATE

ILLINOIS REGISTRATION NO.: 062-053198
EXPIRATION DATE: 11/30/2017

PROFESSIONAL DESIGN FIRM NO.: 184-001157
EXPIRATION DATE: 04/30/2017

THESE PLANS OR ANY PART THEREOF SHALL BE CONSIDERED VOID WITHOUT THE SIGNATURE , SEAL, AND EXPIRATION DATE OF SEAL OF THE ENGINEER

LICENSED PROFESSIONAL ENGINEER BRETT M. DUFFY NO. 062-053198 ILLINOIS

Exhibit received September 21, 2016

800 NORTHGATE PARKWAY
WHEELING, IL

9575 W. Higgins Road, Suite 700, Rosemont, Illinois 60018
Phone: (847) 696-4060 Fax: (847) 696-4065

CONSULTING ENGINEERS
SITE DEVELOPMENT ENGINEERS
LAND SURVEYORS

SPACECO INC.

FILENAME: 1642_04_TITLE
DATE: 09/16/2016
JOB NO. 1642.04
SHEET C1
1 OF 22

GENERAL NOTES

1. REFERENCED CODES

A. ALL PAVEMENT AND STORM SEWER CONSTRUCTION SHALL CONFORM TO THE STANDARD SPECIFICATIONS FOR ROAD AND BRIDGE CONSTRUCTION (SSRBC), AND SUPPLEMENTAL SPECIFICATIONS AND RECURRING SPECIAL PROVISIONS; ADOPTED JANUARY 1, 2012 BY ILLINOIS DEPARTMENT OF TRANSPORTATION AND ALL AMENDMENTS THERETO; AND IN ACCORDANCE WITH THE LATEST EDITION OF THE CODE OF THE MUNICIPALITY; EXCEPT AS MODIFIED HEREIN. IN CASE OF CONFLICT, MUNICIPAL CODE SHALL TAKE PRECEDENCE.

B. ALL SANITARY SEWER AND WATERMAIN CONSTRUCTION SHALL CONFORM TO THE STANDARD SPECIFICATIONS FOR WATER AND SEWER MAIN CONSTRUCTION IN ILLINOIS, PUBLISHED JULY 2009, AND IN ACCORDANCE WITH THE CODE OF THE MUNICIPALITY; EXCEPT AS MODIFIED HEREIN OR BY ANY PUBLIC AGENCY PERMITS ISSUED FOR THIS WORK. IN CASE OF CONFLICT, THE MORE RESTRICTIVE PROVISIONS SHALL APPLY.

C. ALL SIDEWALK AND PUBLIC AREAS MUST BE CONSTRUCTED IN ACCORDANCE WITH CURRENT ADA, ILLINOIS HANDICAP ACCESSIBILITY AND ANY APPLICABLE LOCAL ORDINANCES. WHEN CONFLICTS EXIST BETWEEN THE GOVERNING AGENCIES, THE MORE STRINGENT SHALL GOVERN.

D. THE CITED STANDARD SPECIFICATIONS, CODES AND PERMITS, WITH THESE CONSTRUCTION PLANS AND DETAILS, ARE ALL TO BE CONSIDERED PART OF THE CONTRACT. INCIDENTAL ITEMS OR ACCESSORIES NECESSARY TO COMPLETE THIS WORK MAY NOT BE SPECIFICALLY NOTED BUT ARE CONSIDERED A PART OF THIS CONTRACT.

2. UTILITY LOCATIONS

A. THE UTILITY COMPANIES HAVE BEEN CONTACTED IN REFERENCE TO UTILITIES THEY OWN AND OPERATE WITHIN THE LIMITS FOR THIS PROJECT. DATA FROM THESE AGENCIES HAS BEEN INCORPORATED INTO THE PLANS. IT IS, HOWEVER, THE CONTRACTOR'S RESPONSIBILITY TO CONFIRM OR ESTABLISH THE EXISTENCE OF ALL UTILITY FACILITIES AND THEIR EXACT LOCATIONS, AND TO SAFELY SCHEDULE ALL UTILITY RELOCATIONS. FOR ADDITIONAL INFORMATION, THE AGENCIES LISTED ON THIS SHEET MAY BE CONTACTED.

B. THE CONTRACTOR SHALL BE RESPONSIBLE FOR HAVING THE UTILITY COMPANIES LOCATE THEIR FACILITIES IN THE FIELD PRIOR TO CONSTRUCTION AND SHALL ALSO BE RESPONSIBLE FOR THE MAINTENANCE AND PRESERVATION OF THESE FACILITIES. THE ENGINEER DOES NOT WARRANT THE LOCATION OF ANY EXISTING UTILITIES SHOWN ON THE PLAN. THE CONTRACTOR SHALL CALL J.U.L.I.E. AT 800-892-0123 AND THE MUNICIPALITY, FOR UTILITY LOCATIONS. THE CONTRACTOR SHALL NOTIFY ALL UTILITY COMPANIES AND THE MUNICIPALITY TWENTY-FOUR (24) HOURS PRIOR TO STARTING ANY CONSTRUCTION.

C. EASEMENTS FOR THE EXISTING UTILITIES, BOTH PUBLIC AND PRIVATE, AND UTILITIES WITHIN PUBLIC RIGHTS-OF-WAY ARE SHOWN ON THE PLANS ACCORDING TO AVAILABLE RECORDS. THE CONTRACTOR SHALL BE RESPONSIBLE FOR DETERMINING THE EXACT LOCATION IN THE FIELD OF THESE UTILITY LINES AND THEIR PROTECTION FROM DAMAGE DUE TO CONSTRUCTION OPERATIONS. IF EXISTING UTILITY LINES OF ANY NATURE ARE ENCOUNTERED WHICH CONFLICT WITH LOCATIONS OF THE NEW CONSTRUCTION, THE CONTRACTOR SHALL NOTIFY THE OWNER AND ENGINEER SO THAT THE CONFLICT MAY BE RESOLVED.

3. UTILITY COORDINATION

A. OWNER SHALL OBTAIN EASEMENTS AND PERMITS NECESSARY TO FACILITATE CONSTRUCTION OF THE PROPOSED UTILITIES. THE CONTRACTOR, HOWEVER, SHALL FURNISH ALL REQUIRED BONDS AND EVIDENCE OF INSURANCE NECESSARY TO SECURE THESE PERMITS.

B. THE CONTRACTOR IS RESPONSIBLE FOR VERIFYING THE NATURE AND STATUS OF ALL UTILITY RELOCATION WORK PRIOR TO THE START OF CONSTRUCTION. THE CONTRACTOR SHALL TAKE APPROPRIATE MEASURES TO ENSURE THAT CONSTRUCTION OPERATIONS DO NOT INTERFERE WITH UTILITY FACILITIES AND RELOCATION WORK. THE SCHEDULE SHOULD REFLECT CONSTRUCTION SEQUENCING WHICH COORDINATES WITH ALL UTILITY RELOCATION WORK. THE CONTRACTOR SHALL BE REQUIRED TO ADJUST THE ORDER OF ITS WORK FROM TIME TO TIME, TO COORDINATE SAME WITH UTILITY RELOCATION WORK, AND SHALL PREPARE REVISED SCHEDULE(S) IN COMPLIANCE THEREWITH AS DIRECTED BY THE OWNER.

C. THE OWNER AND THE ENGINEER SHALL BE NOTIFIED IN WRITING BY THE CONTRACTOR AT LEAST 48 HOURS PRIOR TO THE START OF ANY OPERATION REQUIRING COOPERATION WITH OTHERS. AT&T SHALL BE CONTACTED ONE MONTH PRIOR TO START OF CONSTRUCTION IN ITS UTILITY AREAS. ALL OTHER AGENCIES, UNLESS OTHERWISE NOTED, SHALL BE NOTIFIED IN WRITING BY THE CONTRACTOR TEN (10) DAYS PRIOR TO THE START OF ANY SUCH OPERATION.

4. NO PLAN SHALL BE USED FOR CONSTRUCTION UNLESS APPROVED BY THE MWRD. PRIOR TO COMMENCEMENT OF CONSTRUCTION THE CONTRACTOR SHALL VERIFY ALL DIMENSIONS AND CONDITIONS AFFECTING THE WORK WITH THE ACTUAL CONDITIONS AT THE JOB SITE. IN ADDITION, THE CONTRACTOR MUST VERIFY THE ENGINEER'S LINE AND GRADE STAKES. IF THERE ARE ANY DISCREPANCIES WITH WHAT IS SHOWN ON THE CONSTRUCTION PLANS, HE MUST IMMEDIATELY REPORT SAME TO ENGINEER BEFORE DOING ANY WORK, OTHERWISE THE CONTRACTOR ASSUMES FULL RESPONSIBILITY. IN THE EVENT OF DISAGREEMENT BETWEEN THE CONSTRUCTION PLANS, SPECIFICATIONS AND/OR SPECIAL DETAILS, THE CONTRACTOR SHALL SECURE WRITTEN INSTRUCTION FROM THE ENGINEER PRIOR TO PROCEEDING WITH ANY PART OF THE WORK AFFECTED BY OMISSIONS OR DISCREPANCIES. FAILING TO SECURE SUCH INSTRUCTION, THE CONTRACTOR WILL BE CONSIDERED TO HAVE PROCEEDED AT HIS OWN RISK AND EXPENSE. IN THE EVENT OF ANY DOUBT OR QUESTIONS ARISING WITH RESPECT TO THE TRUE MEANING OF THE CONSTRUCTION PLANS OR SPECIFICATIONS, THE DECISION OF THE ENGINEER SHALL BE FINAL AND CONCLUSIVE.

5. ALL PROPOSED ELEVATIONS SHOWN ON THE PLANS ARE FINISHED SURFACE ELEVATIONS, UNLESS OTHERWISE SPECIFIED.

6. UPON AWARDING OF THE CONTRACT, AND WHEN REQUIRED BY THE MUNICIPALITY OR OWNER, THE CONTRACTOR SHALL FURNISH A LABOR, MATERIAL AND PERFORMANCE BOND IN THE AMOUNT REQUIRED GUARANTEEING COMPLETION OF THE WORK. THE UNDERWRITER SHALL BE ACCEPTABLE TO THE MUNICIPALITY OR OWNER, AS APPROPRIATE.

7. THE CONTRACTORS SHALL PLAN THEIR WORK BASED ON THEIR OWN BORINGS, EXPLORATIONS AND OBSERVATIONS TO DETERMINE SOIL CONDITIONS AT THE LOCATION OF THE PROPOSED WORK. HOWEVER, IF THE OWNER HAS A SOILS REPORT, THE RESULTS WILL BE AVAILABLE FROM THE OWNER UPON WRITTEN REQUEST.

8. CONTRACTOR SHALL VIDEO TAPE WORK AREA PRIOR TO CONSTRUCTION FOR THE PURPOSE OF DOCUMENTING EXISTING CONDITIONS.

9. COMMENCING CONSTRUCTION

A. THE CONTRACTOR SHALL NOTIFY THE OWNER AND/OR HIS REPRESENTATIVE AND THE AFFECTED GOVERNMENTAL AGENCIES IN WRITING AT LEAST THREE FULL WORKING DAYS PRIOR TO COMMENCEMENT OF CONSTRUCTION. IN ADDITION, THE CONTRACTOR SHALL NOTIFY AS NECESSARY, ALL TESTING AGENCIES, EITHER MUNICIPALITY'S OR THE OWNER'S, SUFFICIENTLY IN ADVANCE OF CONSTRUCTION. ALL MATERIAL TESTING SHALL BE THE RESPONSIBILITY AND EXPENSE OF THE CONTRACTOR. THE TESTING AGENCY SHALL MEET THE APPROVAL OF THE OWNER.

B. FAILURE OF CONTRACTOR TO ALLOW PROPER NOTIFICATION TIME WHICH RESULTS IN TESTING COMPANIES TO BE UNABLE TO VISIT SITE AND PERFORM TESTING WILL CAUSE CONTRACTOR TO SUSPEND OPERATION (PERTAINING TO TESTING) UNTIL TESTING AGENCY CAN SCHEDULE TESTING OPERATIONS. COST OF SUSPENSION OF WORK TO BE BORNE BY CONTRACTOR.

10. ALL CONTRACTORS SHALL KEEP ACCESS AVAILABLE AT ALL TIMES FOR ALL TYPES OF TRAFFIC. AT NO TIME SHALL ACCESS BE DENIED TO ADJACENT PROPERTIES.

11. THE CONTRACTOR SHALL PRESERVE ALL CONSTRUCTION STAKES UNTIL THEY ARE NO LONGER NEEDED. ANY STAKES DESTROYED OR DISTURBED BY THE CONTRACTOR PRIOR TO THEIR USE SHALL BE RESET BY THE DEVELOPER'S ENGINEER AT CONTRACTOR'S COST.

12. ANY EXISTING SIGNS, LIGHT STANDARDS AND UTILITY POLES WHICH INTERFERE WITH CONSTRUCTION OPERATIONS AND NOT NOTED FOR DISPOSAL SHALL BE REMOVED AND RESET BY THE CONTRACTOR AT HIS OWN EXPENSE AS SHOWN ON THE ENGINEERING PLANS OR AS DIRECTED BY THE DEVELOPER. ANY DAMAGE TO THESE ITEMS SHALL BE REPAIRED OR REPLACED BY THE CONTRACTOR AT HIS OWN EXPENSE TO THE SATISFACTION OF THE OWNER. ANY SIGNS NOT REQUIRED TO BE RESET, SHALL BE DELIVERED TO THE RESPECTIVE OWNERS.

13. REMOVAL OF SPECIFIED ITEMS, INCLUDING BUT NOT LIMITED TO, PAVEMENT, SIDEWALK, CURB, CURB AND GUTTER, CULVERTS, ETC. SHALL BE DISPOSED OF OFF-SITE BY THE CONTRACTOR AT HIS OWN EXPENSE. HE IS RESPONSIBLE FOR ANY PERMIT REQUIRED FOR SUCH DISPOSAL.

14. ALL FIELD TILE ENCOUNTERED DURING CONSTRUCTION OPERATIONS SHALL BE CONNECTED TO THE PROPOSED STORM SEWER SYSTEM OR SHALL BE RESTORED TO PROPER OPERATING CONDITION. A RECORD OF THE LOCATION OF ALL FIELD TILE OR DRAIN PIPE ENCOUNTERED SHALL BE KEPT BY THE CONTRACTOR AND TURNED OVER TO THE ENGINEER, DEVELOPER OR MUNICIPAL ENGINEER UPON COMPLETION OF THE PROJECT. THE COST OF THIS WORK SHALL BE CONSIDERED AS INCIDENTAL TO THE CONTRACT AND NO ADDITIONAL COMPENSATION WILL BE ALLOWED.

15. THE CONTRACTOR IS SOLELY RESPONSIBLE FOR SAFETY ON THE JOB.

16. THE CONTRACTOR SHALL COLLECT AND REMOVE ALL CONSTRUCTION DEBRIS, EXCESS MATERIALS, TRASH, OIL AND GREASE RESIDUE, MACHINERY, TOOLS AND OTHER MISCELLANEOUS ITEMS WHICH WERE NOT PRESENT PRIOR TO PROJECT COMMENCEMENT AT NO ADDITIONAL EXPENSE TO THE OWNER. THE CONTRACTOR SHALL BE RESPONSIBLE FOR ACQUIRING ANY AND ALL PERMITS NECESSARY FOR THE HAULING AND DISPOSAL REQUIRED FOR CLEAN-UP AS DIRECTED BY THE ENGINEER OR OWNER. BURNING ON THE SITE IS NOT PERMITTED.

17. ALL EXISTING UTILITIES OR IMPROVEMENTS, INCLUDING WALKS, CURBS, PAVEMENT AND PARKWAYS DAMAGED OR REMOVED DURING CONSTRUCTION SHALL BE PROMPTLY RESTORED TO THEIR RESPECTIVE ORIGINAL CONDITION. THIS WORK SHALL BE CONSIDERED INCIDENTAL TO THE CONTRACT UNLESS SPECIFICALLY NOTED ON THE PLANS.

18. TREES NOT MARKED FOR REMOVAL SHALL BE CONSIDERED AS DESIGNATED TO BE SAVED AND SHALL BE PROTECTED UNDER THE PROVISIONS OF (SSRBC) ARTICLE 201.05.

19. LIMB PRUNING SHALL BE PERFORMED UNDER THE SUPERVISION OF THE LANDSCAPE ARCHITECT MEETING THE OWNER'S APPROVAL AND SHALL BE UNDERTAKEN IN A TIMELY FASHION SO AS NOT TO INTERFERE WITH CONSTRUCTION.

20. ALL LIMBS, BRANCHES, AND OTHER DEBRIS RESULTING FROM THIS WORK SHALL BE DISPOSED OF OFF-SITE BY THE CONTRACTOR AT HIS OWN EXPENSE OFF-SITE.

21. ALL CUTS OVER 1" IN DIAMETER SHALL BE MADE FLUSH WITH THE NEXT LARGE BRANCH. WOUNDS OVER 1" IN DIAMETER SHALL BE PAINTED WITH AN APPROVED TREE PAINT.

22. GENERAL EXCAVATION/UNDERGROUND NOTES

A. SLOPE SIDES OF EXCAVATIONS TO COMPLY WITH CODES AND ORDINANCES HAVING JURISDICTION. SHORE AND BRACE WHERE SLOPING IS NOT POSSIBLE EITHER BECAUSE OF SPACE RESTRICTIONS OR STABILITY OF MATERIAL EXCAVATED. MAINTAIN SIDES AND SLOPES OF EXCAVATIONS IN A SAFE CONDITION UNTIL COMPLETION OF BACKFILLING.

B. PROVIDE MATERIALS FOR SHORING AND BRACING, SUCH AS SHEET PILING, UPRIGHTS, STRINGERS AND CROSS BRACES, IN GOOD SERVICEABLE CONDITION. PROVIDE MINIMUM REQUIREMENTS FOR TRENCH SHORING AND BRACING TO COMPLY WITH CODES AND AUTHORITIES HAVING JURISDICTION. MAINTAIN SHORING AND BRACING IN EXCAVATIONS REGARDLESS OF TIME PERIOD EXCAVATIONS WILL BE OPEN. CARRY DOWN SHORING AND BRACING AS EXCAVATION PROGRESSES IN ACCORDANCE WITH OSHA AND GOVERNING AUTHORITY.

C. PREVENT SURFACE WATER AND SUBSURFACE OR GROUNDWATER FROM FLOWING INTO EXCAVATIONS. REMOVE WATER TO PREVENT SOFTENING OF FOUNDATION BOTTOMS, UNDERCUTTING FOOTINGS, AND SOIL CHANGES DETRIMENTAL TO STABILITY OF SUBGRADES AND FOUNDATIONS. PROVIDE AND MAINTAIN PUMPS, SUMPS, SUCTION AND DISCHARGE LINES AND OTHER DEWATERING SYSTEM COMPONENTS NECESSARY TO CONVEY WATER AWAY FROM EXCAVATIONS. CONVEY WATER REMOVED FROM EXCAVATIONS AND RAINWATER TO COLLECTING OR RUN-OFF AREAS ACCEPTABLE TO AUTHORITIES HAVING JURISDICTION. PROVIDE AND MAINTAIN TEMPORARY DRAINAGE DITCHES AND OTHER DIVERSIONS OUTSIDE EXCAVATION LIMITS FOR EACH STRUCTURE. DO NOT USE TRENCH EXCAVATIONS AS TEMPORARY DRAINAGE DITCHES.

D. IMMEDIATELY REPORT CONDITIONS THAT MAY CAUSE UNSOUND BEARING TO THE OWNER/DEVELOPER BEFORE CONTINUING WORK.

23. FINAL ACCEPTANCE

A. ALL WORK PERFORMED UNDER THIS CONTRACT SHALL BE GUARANTEED BY THE CONTRACTOR AND HIS SURETY FOR A PERIOD OF TWELVE (12) MONTHS FROM THE DATE OF FINAL ACCEPTANCE OF THE PROJECT AND THE CONTRACTOR SHALL BE HELD RESPONSIBLE FOR ALL DEFECTS IN MATERIALS AND WORKMANSHIP OF WHATEVER NATURE DURING THAT PERIOD. THIS GUARANTEE SHALL BE PROVIDED IN THE FORM OF MAINTENANCE BOND IN THE AMOUNT OF 10% OF THE COST OF IMPROVEMENTS.

B. BEFORE ACCEPTANCE BY THE OWNER AND FINAL PAYMENT, ALL WORK SHALL BE INSPECTED BY THE OWNER OR HIS REPRESENTATIVE. FINAL PAYMENT WILL BE MADE AFTER ALL THE CONTRACTOR'S WORK HAS BEEN APPROVED AND ACCEPTED.

C. NO UNDERGROUND WORK SHALL BE COVERED UNTIL IT HAS BEEN APPROVED BY THE MUNICIPALITY. APPROVAL TO PROCEED MUST BE OBTAINED FROM THE MUNICIPALITY PRIOR TO INSTALLING PAVEMENT BASE, BINDER, SURFACE, AND PRIOR TO PLACING ANY CONCRETE AFTER FORMS HAVE BEEN SET.

D. AT THE CLOSE OF EACH WORKING DAY AND AT THE CONCLUSION OF CONSTRUCTION OPERATIONS, ALL DRAINAGE STRUCTURES AND FLOW LINES SHALL BE FREE FROM DIRT AND DEBRIS.

24. UNDERGROUND NOTES

A. UNDERGROUND WORK SHALL INCLUDE TRENCHING, INSTALLATION OF PIPE, CASTINGS, STRUCTURES, BACKFILLING OF TRENCHES AND COMPACTION AND TESTING AS SHOWN ON THE CONSTRUCTION PLANS. FITTINGS AND ACCESSORIES NECESSARY TO COMPLETE THE WORK MAY NOT BE SPECIFIED, BUT SHALL BE CONSIDERED AS INCIDENTAL TO THE COST OF THE CONTRACT.

B. WHERE SHOWN ON THE PLANS OR DIRECTED BY THE ENGINEER, EXISTING DRAINAGE STRUCTURES AND SYSTEMS SHALL BE CLEANED OF DEBRIS AND PATCHED AS NECESSARY TO ASSURE INTEGRITY OF THE STRUCTURE. THIS WORK SHALL BE PAID FOR AT THE CONTRACT UNIT PRICE EACH FOR STRUCTURES AND CONTRACT UNIT PRICE PER LINEAL FOOT FOR SYSTEMS WHICH SHALL BE PAYMENT IN FULL FOR CLEANING, PATCHING, REMOVAL AND DISPOSAL OF DEBRIS AND DIRT. DRAINAGE STRUCTURES AND SYSTEMS CONSTRUCTED AS PART OF THIS PROJECT SHALL BE MAINTAINED BY THE CONTRACTOR AT HIS EXPENSE. NO PAYMENT WILL BE MADE FOR CLEANING STRUCTURES OR SYSTEMS CONSTRUCTED AS PART OF THIS PROJECT.

C. ANY DEWATERING OF SEWER AND WATER TRENCHES AS WELL AS TEMPORARY SHEETING OR BRACING THAT MAY BE REQUIRED SHALL BE THE RESPONSIBILITY OF THE CONTRACTOR AND SHALL NOT BE CONSIDERED EXTRA WORK UNLESS THERE IS A SPECIFIC LINE ITEM FOR DEWATERING. IN THE EVENT THAT SOFT MATERIALS WITH UNCONFINED COMPRESSIVE STRENGTH LESS THAN 0.5 TSF ARE ENCOUNTERED IN SEWER CONSTRUCTION, THE CONTRACTOR SHALL (UPON APPROVAL OF THE OWNER AND/OR ENGINEER) OVER-EXCAVATE TO A DEPTH OF ONE (1) FOOT BELOW THE BOTTOM OF THE PIPE AND BACKFILL WITH COMPACTED CRUSHED STONE, PROPERLY FORMED TO FIT THE BOTTOM OF THE PIPE.

D. TRENCH BACKFILL WILL BE REQUIRED FOR THE FULL TRENCH DEPTH WITHIN TWO (2) FEET OF PROPOSED OR EXISTING PAVEMENTS, UTILITIES, DRIVEWAYS, AND SIDEWALKS AND EXTENDING A DISTANCE EQUAL TO A 1:1 SLOPE FROM SUBGRADE ELEVATION TO TOP OF PIPE. THE TRENCH BACKFILL SHALL CONSIST OF GRANULAR MATERIAL MEETING IDOT CA-6 GRADATION. THE TRENCH BACKFILL SHALL BE COMPACTED IN ACCORDANCE WITH (SSRBC) SPECIFICATIONS. JETTING WITH WATER SHALL NOT BE PERMITTED. THE COST OF SUCH CONSTRUCTION SHALL BE CONSIDERED INCIDENTAL TO THIS CONTRACT AND SHALL BE INCLUDED IN THE UNIT PRICE OF THE PIPE. NO SEPARATE PAYMENT SHALL BE MADE FOR THIS ITEM.

E. THE CONTRACTOR SHALL INSTALL A 4" X 4" X 8' (NOMINAL) POST AT THE TERMINUS OF THE SANITARY, WATER AND STORM SERVICE, SANITARY AND STORM MANHOLES, CATCH BASINS, INLETS AND WATER VAULTS. THE POST SHALL EXTEND 4' ABOVE THE GROUND. THE TOP 12" OF SAID POST SHALL BE PAINTED AS FOLLOWS: SANITARY - RED, WATERMAIN - BLUE, STORM - GREEN.

F. AFTER THE STORM SEWER SYSTEM HAS BEEN CONSTRUCTED, THE CONTRACTOR SHALL PLACE EROSION CONTROL AT REAR YARD INLET LOCATIONS, AND AT OTHER LOCATIONS SELECTED BY THE ENGINEER, TO MINIMIZE THE AMOUNT OF SILTATION WHICH NORMALLY WOULD ENTER THE STORM SEWER SYSTEM.

G. HYDRANTS SHALL NOT BE FLUSHED DIRECTLY ON THE ROAD SUBGRADES. WHENEVER POSSIBLE, HOSES SHALL BE USED TO DIRECT THE WATER INTO LOT AREAS OR THE STORM SEWER SYSTEM (IF AVAILABLE). DAMAGE TO THE ROAD SUBGRADE OR LOT GRADING DUE TO EXCESSIVE WATER SATURATION AND/OR EROSION FROM HYDRANT FLUSHING, OR FROM LEAKS IN THE WATER DISTRIBUTION SYSTEM, WILL BE REPAIRED BY THE CONTRACTOR AT HIS COST.

H. ALL TOP OF FRAMES FOR STORM AND SANITARY SEWERS AND VALVE VAULT COVERS ARE TO BE ADJUSTED TO MEET FINAL FINISH GRADE. THIS ADJUSTMENT IS TO BE MADE BY THE SEWER AND WATER CONTRACTOR AND THE COST IS TO BE CONSIDERED INCIDENTAL. THESE ADJUSTMENTS TO FINISHED GRADE WILL NOT ALLEVIATE THE CONTRACTOR FROM ANY ADDITIONAL ADJUSTMENTS AS REQUIRED BY THE MUNICIPALITY UPON FINAL INSPECTION OF THE PROJECT. (FINAL GRADES TO BE DETERMINED BY THE MUNICIPALITY AT THE TIME OF FINAL INSPECTION AND MAY VARY FROM PLAN GRADE.)

I. SLEEVES FOR UTILITY (COMED, TELEPHONE, ETC.) STREET CROSSING, SHALL BE INSTALLED WHERE DIRECTED BY THE OWNER. SLEEVES SHALL BE 6" PVC INSTALLED 36" BELOW THE TOP OF CURB AND EXTEND TWO FEET OUTSIDE THE CURB. TRENCH SHALL BE BACKFILLED WITH COMPACTED GRANULAR MATERIAL.

J. THE CONTRACTOR SHALL VERIFY THE SIZE AND INVERT ELEVATION OF ALL CONNECTIONS TO AVOID ANY CONFLICTS BEFORE STARTING WORK. NOTIFY OWNER OF ANY DISCREPANCIES.

25. IT SHALL BE UNDERSTOOD THAT NEITHER THE MUNICIPALITY, ITS OFFICIALS, CONSULTANTS, NOR ITS EMPLOYEES ARE AGENTS OF OR REPRESENTATIVES OF THE OWNER. NONE-THE-LESS, THE MUNICIPALITY, ITS OFFICIALS AND EMPLOYEES ARE TO BE PROVIDED SAFE ACCESS TO ALL PHASES OF ALL WORK PERFORMED ON THE PROJECT SITE TO MONITOR THE QUALITY OF THE WORK AND ASSURE ITS CONFORMITY WITH THE PLANS AND SPECIFICATIONS. THERE SHALL BE NO PERSONAL LIABILITY UPON ANY OFFICIAL OR EMPLOYEE OF THE MUNICIPALITY ON ACCOUNT OF ACTIONS TAKEN OR NOT TAKEN IN THE COURSE OF THEIR WORK. THE CONTRACTOR MUST AT ALL TIMES MAINTAIN A SAFE ACCESS TO THE WORK FOR INSPECTORS. "SAFE" : MEANING CONDITIONS COMPLYING WITH ALL PROVISIONS OF ALL APPLICABLE AND RECOGNIZED SAFETY STANDARDS, FEDERAL, STATE AND LOCAL. IF ACCESS IS NOT SAFE AND INSPECTIONS CANNOT BE MADE UNDER SAFE CONDITIONS, THE INSPECTOR CAN ORDER CESSATION OF THE WORK SO AFFECTED UNTIL SUCH TIME AS CONTRACTOR PROVIDES SAFE ACCESS.

GENERAL NOTES

1) It shall be the responsibility of the developer (owner) and the contractor to abide by, adhere to and perform all work in accordance with the requirements, specifications, standards, practices, policies and codes of the Village of Wheeling which includes but is not limited to labor, materials, procedures and safety.

2) Underground construction shall comply with the applicable ordinances and requirements of the Village of Wheeling and the Illinois Department of Transportation "Specifications for Road and Bridge Construction", latest edition, and the Standard Specifications for Water and Sewer Main Construction in Illinois, latest edition. All construction shall conform to the Illinois Recommended Standards for Sewerage Works, latest edition, published by the Illinois Environmental Protection Agency (I.E.P.A.) except for conflicts with the Metropolitan Water Reclamation District of Greater Chicago (M.W.R.D.G.C.) Sewer Permit and Manual of Procedures Ordinances. In case of a conflict the most restrictive standards and requirements shall govern.

3) All paving and excavation work shall comply with the applicable ordinances of the Village of Wheeling and the Illinois Department of Transportation "Specifications for Road and Bridge Construction" latest edition. In case of a conflict, the most restrictive standards and requirements shall govern.

4) The contractor shall field check and verify all existing utility locations, dimensions and elevations in the field prior to the commencement of construction of the improvements or proposed work. All existing utility locations on the plans have been shown based on best available information. Notify the engineer immediately if discrepancies are found.

5) Any changes, revisions or substitutions to the plans, specifications, materials, requirements or work shall be submitted to the Village Engineer, in writing, with written approval by the Village Engineer received prior to beginning said work. All materials and construction whether implicitly or explicitly stated or covered within the requirements, codes or specifications, shall be approved by the Village Engineer, prior to commencing the installation and construction.

6) The contractor must contact J.U.L.I.E. at 1-800-892-0123 at least 48 hours prior to starting work. All other agencies shall also be notified as required.

7) The contractor shall notify the Village of Wheeling Engineering Division at (847) 459-2620 and the Metropolitan Water Reclamation District of Greater Chicago (708) 588-4055 two (2) business days prior to the start of construction.

8) It shall be the responsibility of the contractor to call the Village at 847-459-2620 at least 48 hours in advance and set up the necessary and proper inspection(s) for all work to be performed.

9) One set of stamped approved plans shall be on site at all times during construction of the project.

10) It is the responsibility of the contractor to maintain and keep at the job site, an up to date set of "Record Drawings" showing all changes from the original plans. The contractor shall deliver the "Record Drawings" to the engineer at the conclusion of the project, prior to any final inspections. The engineer will transfer the information to the original plans by incorporating the Village of Wheeling As-Built requirement list and furnish the Village three (3) sets of complete "Record Drawings," and, if required, one (1) set of electronic version of the Record Drawings and Site Information at the completion of the project.

11) The location of all service connections for sanitary sewer, storm sewer and water shall be shown from the closest manhole or valve vault. All B-boxes and cleanouts must be shown with tied dimensions. The elevation of all rims and inverts shall be verified by the contractor and shown on the "Record Drawings".

12) OSHA rules, regulations and requirements shall be strictly adhered to during the execution of all work to be performed under the approved drawings.

13) The contractor shall provide video tape(s) or still pictures as required by the Village Engineer prior to the commencement of work.

14) The contractor shall restore all disturbed off-site areas to at least a condition that existed prior to construction.

15) All unpaved areas of the right-of-way are to be sodded. Restore right-of-way with six (6) inches of topsoil and sod.

16) All existing field drainage tiles encountered or damaged during construction are to be restored to their original condition, properly rerouted and/or connected to the storm sewer system.

17) Storm and sanitary sewer lines shall be cleaned of all construction debris and silt prior to Village inspection.

18) All independent testing to be paid for by the developer. Testing to be conducted at the discretion of the Village.

19) All obstructions that are not approved by the Village and which currently exist in the right-of-way shall be removed, which include all rocks and boulders.

20) All septic and/or well abandonment's shall be in accordance with the requirement of the Village of Wheeling.

21) The contractor shall refer to mitigation or landscape plans for complete information regarding planting locations, wetlands, walkways, walls, and stream and pond shorelines, if applicable.

22) An iron pipe shall be found and located or set at each lot corner.

23) All elevations are based upon NAVD 88 Datum.

GENERAL UNDERGROUND UTILITIES

1) All sewer construction shall conform to the approved permit plans unless revisions have been approved by the Village, as well as any and all other Agencies.

2) Trench backfill shall be provided under and within two feet (2') of all existing and proposed pavement. Concrete Curb & Gutter shall be considered a part of the existing and proposed pavement. Trench backfill material shall be CA-6, Grade 8, Crushed Limestone, virgin material unless otherwise approved.

3) All manholes and catch basin structures must be a minimum of 48" in diameter, valve vaults must be a minimum of 60" diameter, unless approved otherwise.

4) All sewer construction requires stone bedding 1/4" to 1" in size, (I.D.O.T. equivalent CA-11, CA-13) with a minimum thickness equal to 1/4 the outside diameter of the sewer pipe, but not less than four (4) inches, nor greater than eight (8) inches.

5) If required, all trenches shall be dewatered PRIOR to laying any pipe or jointing. Trenches shall be dewatered to maintain the water level below the base of the bedding.

6) Structures shall have a maximum of twelve inches (12") of adjustment rings with any combination up to a maximum of three (3) rings.

7) Concentric cone sections shall be used on all manholes, catch basins, vaults, etc. unless approved otherwise by the Village Engineer.

8) All storm, sanitary and watermain services to end at R.O.W. with proper termination for subdivision construction.

9) The contractor shall mark location of the ends, if necessary, of any sanitary, water, and storm services with buried 4" x 4" wood posts extending a minimum of three (3) feet out of the ground and painted red, blue, and green respectively, with appropriate signs attached stating "caution B-box do not remove until landscaping is complete."

10) A minimum ten feet (10') horizontal separation shall be maintained between watermain and sewer or drain lines unless precluded by local conditions. When the watermain is located closer than ten feet (10') horizontally or the invert of the watermain is located closer than eighteen inches (18") vertically above the crown of any sewer or drain line, then:

The sewer or drain line shall be constructed of pipe equivalent to watermain standards and shall be pressure tested to assure water tightness in accordance with the Illinois Environmental Protection Agency (I.E.P.A.) requirements.

11) When a watermain is crossing over a sewer or drain line closer than eighteen inches (18") vertically above the crown of that sewer or drain line, then that sewer or drain line shall be constructed according to the requirements listed in item 10 above.

12) If the watermain passes under a sewer or drain line, the following conditions shall be met: a vertical separation of eighteen inches (18") between the invert of the sewer or drain line and the crown of the watermain shall be maintained with support provided for the sewer or drain line(s) to prevent any moving or settling, rupture or breaking, and sewer or drain line shall be constructed as described in item 4) above.

13) The cost of all required testing of underground utilities shall be incidental to the construction cost of the same.

14) When connecting to an existing sewer main by means other than an existing wye, tee, or an existing manhole. The sewer shall be circular saw-cut by proper tools ("sewer-tap" machine or similar) and proper installation of hub-wye saddle or hub-tee saddle.

15) Sewer connections to an existing structure shall be machine cored.

16) A flexible rubber boot shall be used at all sanitary sewer manhole penetration connections.

17) Protect and/or cover all pipes and underground structures until final grading, paving and landscaping are complete.

18) For modification or repair of all sewers; addition of, or repair of, sewer clean outs, **non shear** couplings shall be used in connection of sewer pipes with prior approval from Village Engineering Division of Community Development Department.

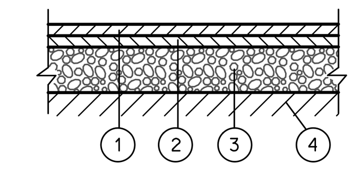

HEAVY DUTY HMA PAVEMENT SECTION

N.T.S.

1. 2.0" HMA SURFACE COURSE, MIX "D", N50
2. 4.0" HMA BINDER COURSE, IL 19.0, N50
3. 8.0" AGGREGATE BASE COURSE, TYPE B
4. COMPACTED AND STABLE SUBGRADE

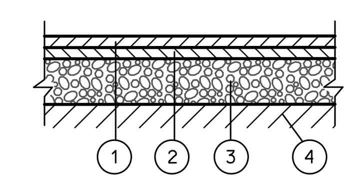

LIGHT DUTY HMA PAVEMENT SECTION

N.T.S.

1. 1.5" HMA SURFACE COURSE, MIX "D", N50
2. 2.0" HMA BINDER COURSE, IL 19.0, N50
3. 8.0" AGGREGATE BASE COURSE, TYPE B
4. COMPACTED AND STABLE SUBGRADE

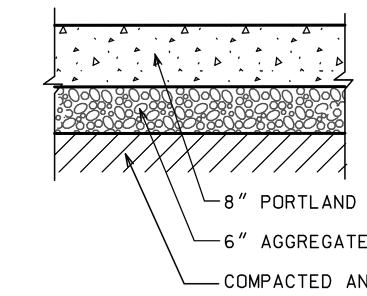

8" PORTLAND CEMENT CONCRETE (4,000 PSI)
6" AGGREGATE BASE COURSE, TYPE B
COMPACTED AND STABLE SUBGRADE

TYPICAL CONCRETE PAVEMENT SECTION
LOADING DOCK
N.T.S.

LEGEND

EXISTING	DESCRIPTION	PROPOSED
	DRAIN TILE	
	STORM SEWER	
	SANITARY SEWER	
	SANITARY TRUNK SEWER	
-W— 8" —	WATER MAIN (WITH SIZE)	-W— 8" —
	PIPE TRENCH BACKFILL	
—G— —G—	GAS MAIN	—G— —G—
—T— —T—	TELEPHONE LINES	—T— —T—
—E— —E—	ELECTRIC LINE	—E— —E—
—x—	FENCE	—x—
	RIGHT-OF-WAY	
	EASEMENT	
	PROPERTY LINE	
	SETBACK LINE	
	CENTERLINE	
680	CONTOUR	680
	SANITARY MANHOLE	
	STORM MANHOLE	
	CATCH BASIN	
	INLET	
	FIRE HYDRANT	
	PRESSURE CONNECTION	
	PIPE REDUCER	
	VALVE AND VAULT, VALVE	
	FLARED END SECTION	
	STREET LIGHT	
	UTILITY POLE	
	CONTROL POINT	
	SIGN	
XXX.XX	SPOT ELEVATION	XXX.XX
	SOIL BORING	
	OVERLAND FLOW ROUTE	
	DRAINAGE SLOPE	OR
	GUARDRAIL	
	WATER'S EDGE	
	CONCRETE	
	STANDARD PITCH CURB	
	TREE, FIR TREE, BUSH, & PROPOSED TREE TO REMOVE	

ABBREVIATIONS

M = STORM MANHOLE	I = INVERT OR INLET	T/P = TOP OF PIPE
S = SANITARY MANHOLE	TF = TOP OF FOUNDATION	B/P = BOTTOM OF PIPE
CB = CATCH BASIN	GF = GARAGE FLOOR	WM = WATERMAIN
LP = LIGHT POLE	TC = TOP OF CURB	SAN = SANITARY SEWER
VV = VALVE VAULT	TD = TOP OF DEPRESSED CURB	STM = STORM SEWER
E = END SECTION	TW = TOP OF RETAINING WALL	LO = LOOK OUT
FH = FIRE HYDRANT	BW = BOTTOM OF RETAINING WALL	PLO = PARTIAL LOOK OUT
GR = GRADE RING (HYDRANT)	OP = OUTLET OF PIPE	

PERMITS

DESCRIPTION	LOG NO.	PERMIT NO.	DATE ISSUED

BENCH MARK

SOURCE BENCHMARK:
VILLAGE OF WHEELING BENCHMARK BM-9:
2.5" ALLUMINIUM DISK STAMPED VILLAGE OF WHEELING - SURVEY MARKER ON THE NORTH SIDE OF WEST WINGWALL OF THE NORTHGATE PARKWAY BOX CULVERT.
ELEVATION = 647.521 (NAVD 88)

SITE BENCHMARK #1:
SOUTHWESTERLY BONNET BOLT ON FIRST FIRE HYDRANT WEST OF NORTHGATE PARKWAY ON SOUTH SIDE OF ENTRANCE ROAD TO DURABLE PACKING CO.
ELEVATION = 655.87 (NAVD 88)

SITE BENCHMARK #2:
SQUARE CUT ON SOUTH SIDE OF CONCRETE BASE OF FIRST LIGHT POLE WEST OF NORTHGATE PARKWAY ON SOUTH SIDE OF ENTRANCE TO DURABLE PACKING CO.
ELEVATION = 656.08 (NAVD 88)

CONTACT INFORMATION

AT&T
(630) 573-5450

AT&T/T-TCG
(630) 390-0089
CONTACT: BOBBY AKHTER

NORTH SHORE GAS COMPANY
(847) 263-4638
CONTACT: GRACE PTAK

COMED
(630) 576-7094

VILLAGE OF WHEELING
(847) 499-9059
CONTACT: JON TACK

NORTHWEST WATER COMMISION
(847) 635-0777
CONTACT: ROBERT TOBEN

COMCAST
(630) 600-6352
CONTACT: MARTHA GIERAS

G4S TECHNOLOGY LLC
(630) 343-2826
CONTACT: DOUG GONES

USIC LOCATION SERVICES
INFO NOT PROVIDED

NICOR GAS
(630) 388-2362

WEST SHORE PIPE LINE
(610) 904-4409
CONTACT: DAVE JONES

NO.	DATE	REMARKS

NO.	DATE	REMARKS

TYPICAL SECTIONS AND GENERAL NOTES

800 NORTHGATE PARKWAY
WHEELING, ILLINOIS

CONSULTING ENGINEERS
SITE DEVELOPMENT ENGINEERS
LAND SURVEYORS
9575 W. Higgins Road, Suite 700,
Rosemont, Illinois 60018
Phone: (847) 696-4060 Fax: (847) 696-4065
SPACECO INC.

FILENAME: 1642_04_GN

DATE: 09/16/2016

JOB NO. 1642.04

SHEET GN

N:\DGN\1642\1642.04-hamilton.partners\ENG\1642_04_GN.dgn Default User=randerson

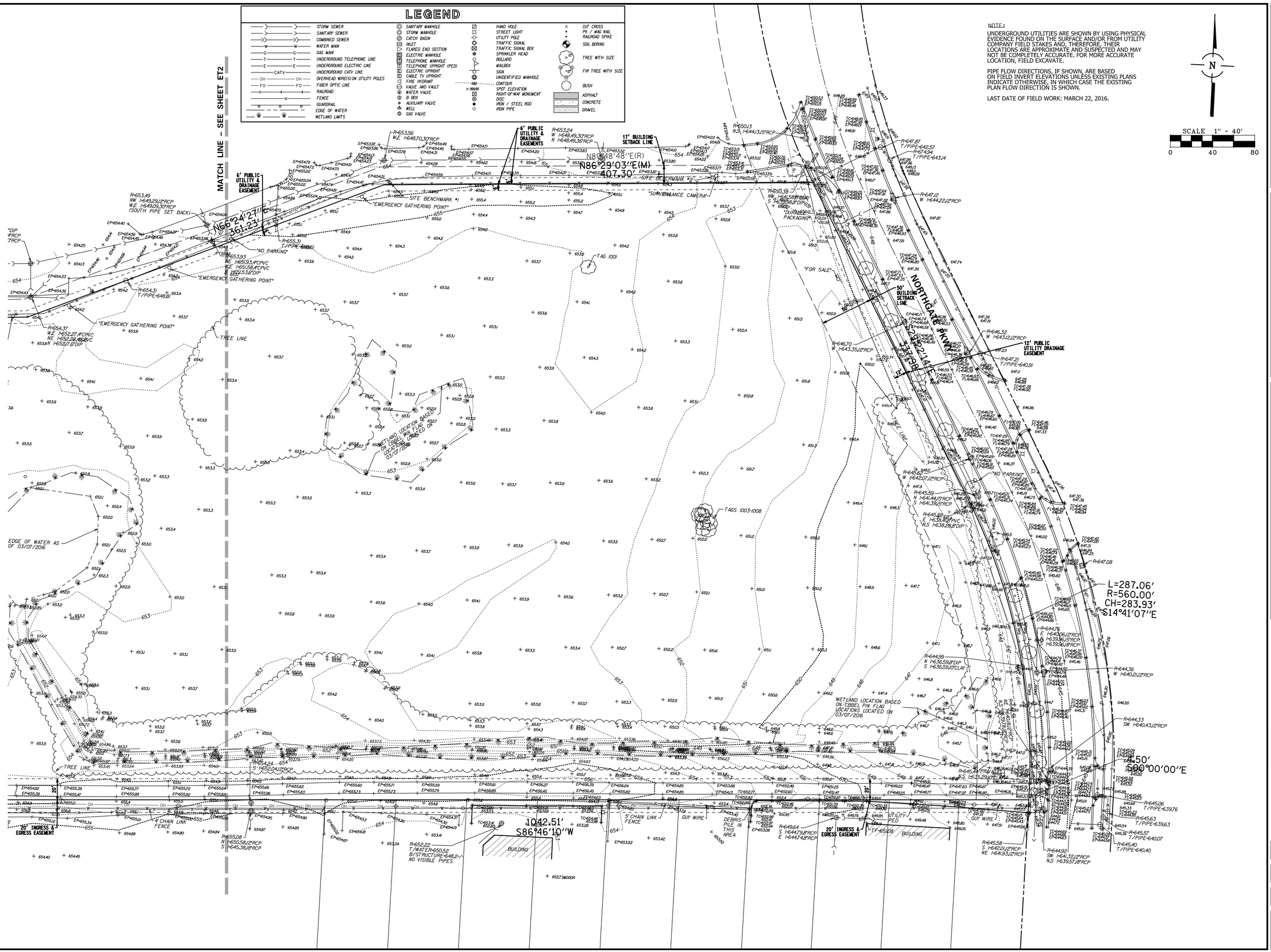

NOTE:

UNDERGROUND UTILITIES ARE SHOWN BY USING PHYSICAL EVIDENCE FOUND ON THE SURFACE AND/OR FROM UTILITY COMPANY FIELD STAKES AND, THEREFORE, THEIR LOCATIONS ARE APPROXIMATE AND SUSPECTED AND MAY NOT BE COMPLETELY ACCURATE. FOR MORE ACCURATE LOCATION, FIELD EXCAVATE.

PIPE FLOW DIRECTIONS, IF SHOWN, ARE BASED ON FIELD INVERT ELEVATIONS UNLESS EXISTING PLANS INDICATE OTHERWISE, IN WHICH CASE THE EXISTING PLAN FLOW DIRECTION IS SHOWN.

LAST DATE OF FIELD WORK: MARCH 22, 2016.

N

SCALE 1" = 40'

0 40 80

NO.	DATE	REMARKS

NO.	DATE	REMARKS

EXISTING CONDITIONS - 1

800 NORTHGATE PARKWAY
WHEELING, ILLINOIS

CONSULTING ENGINEERS
SITE DEVELOPMENT ENGINEERS
LAND SURVEYORS
9575 W. Higgins Road, Suite 700,
Rosemont, Illinois 60018
Phone: (847) 696-4060 Fax: (847) 696-4065
SPACECO INC.

FILENAME: 1642_04_ET01

DATE: 09/16/2016

JOB NO. 1642.04

SHEET ET1

3 OF 22

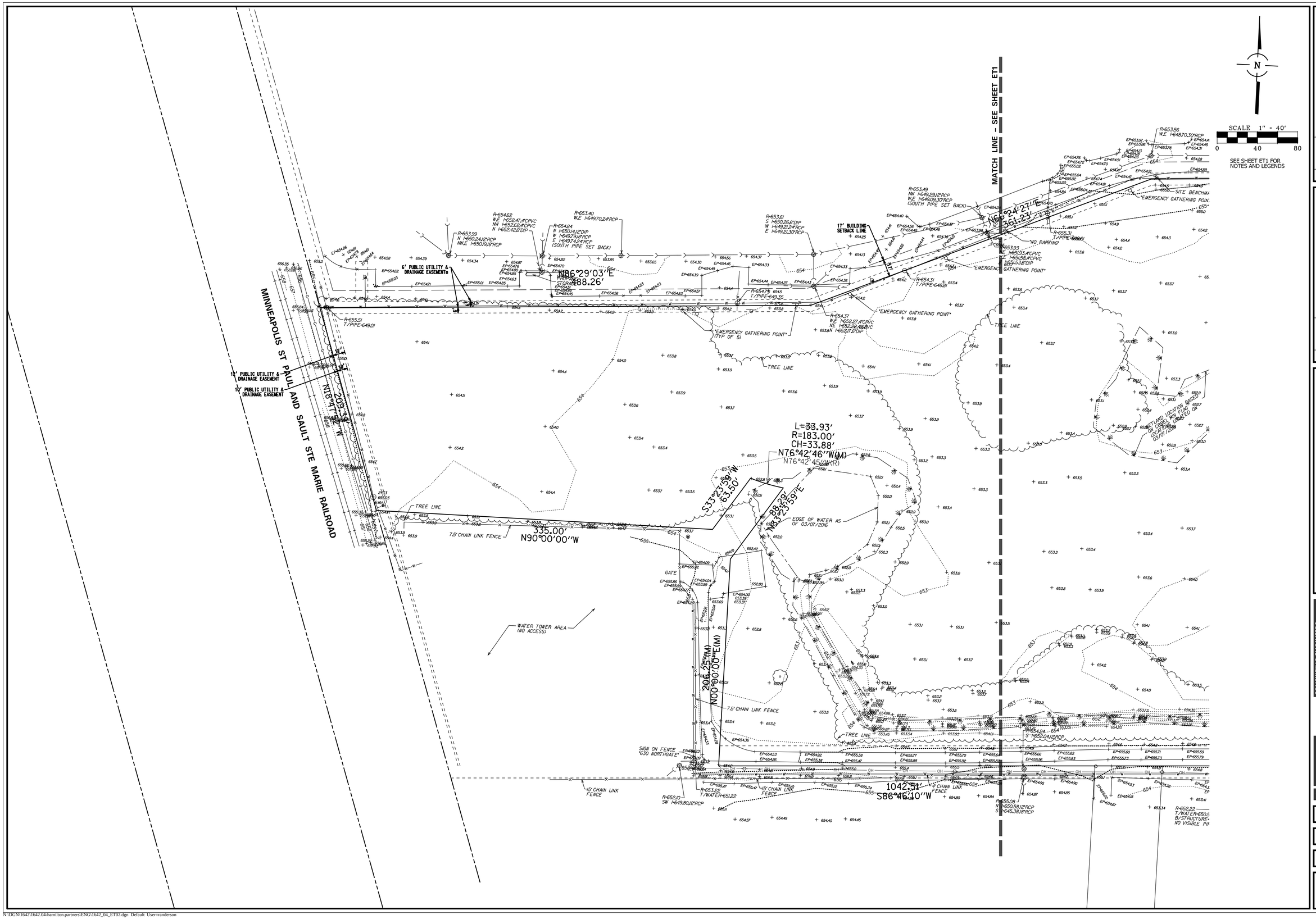

NO.	DATE	REMARKS

NO.	DATE	REMARKS

EXISTING CONDITIONS - 2

800 NORTHGATE PARKWAY
WHEELING, ILLINOIS

CONSULTING ENGINEERS
SITE DEVELOPMENT ENGINEERS
LAND SURVEYORS
9575 W. Higgins Road, Suite 700,
Rosemont, Illinois 60018
Phone: (847) 696-4060 Fax: (847) 696-4065
SPACECO INC.

FILENAME: 1642_04_ET02

DATE: 09/16/2016

JOB NO. 1642.04

SHEET **ET2**

N:\DGN\1642\1642.04-hamilton.partners\ENG\1642_04_ET02.dgn Default User=randerson

NOTES:

1. ALL DIMENSIONS ARE TO THE BACK OF CURB UNLESS OTHERWISE NOTED.
2. ALL CURBS AND GUTTERS ARE REVERSE PITCH B-6.12 UNLESS OTHERWISE NOTED.
3. SEE SHEET GN FOR PAVEMENT SECTION DETAILS.
4. ALL PAVEMENT MARKINGS SHALL BE PAINT.
5. ALL ACCESSIBLE PARKING SPACE SIGNAGE SHALL CONFORM TO ILLINOIS ACCESSIBILITY CODE.
6. SEE ARCHITECTURAL DRAWINGS FOR FINAL DIMENSIONS, DESIGN AND DETAILS OF THE BUILDING.
7. ALL ON-SITE HC/CURB RAMPS SHALL FOLLOW IDOT STANDARDS WITH THE EXECEPTION OF PROVIDING DETECTABLE WARNINGS, UNLESS OTHERWISE INDICATED ON THE PLANS.

N

SCALE 1" = 40'

0 40 80

LEGEND

- HEAVY DUTY HMA PAVEMENT
- CONCRETE PAVEMENT OR APRON
- LIGHT DUTY HMA PAVEMENT
- CONCRETE SIDEWALK
- CONCRETE SIDEWALK HC RAMP (5' WIDE UNLESS NOTED)
- B-6.12 CURB & GUTTER (REVERSE PITCH)
- STANDARD PITCH CURB (STANDARD PITCH)
- DEPRESSED CURB
- MEET EXISTING PAVEMENT AND REPLACE ADJACENT SURFACE COURSE WITH LIKE MATERIALS (2' WIDE STRIP ADJACENT TO CURB & GUTTER REMOVAL - SEE DETAIL ON SHEET D4)
- LIGHT POLE (SEE LIGHTING PLANS FOR DESIGN & DETAILS)

SIGN LEGEND:

1 STOP — R1-1, 30" x 30"

2 RESERVED PARKING — $250 FINE — VAN ACCESSIBLE — R7-8

NOTE: 1 2 INDICATES SIGN 1 MOUNTED ABOVE SIGN 2

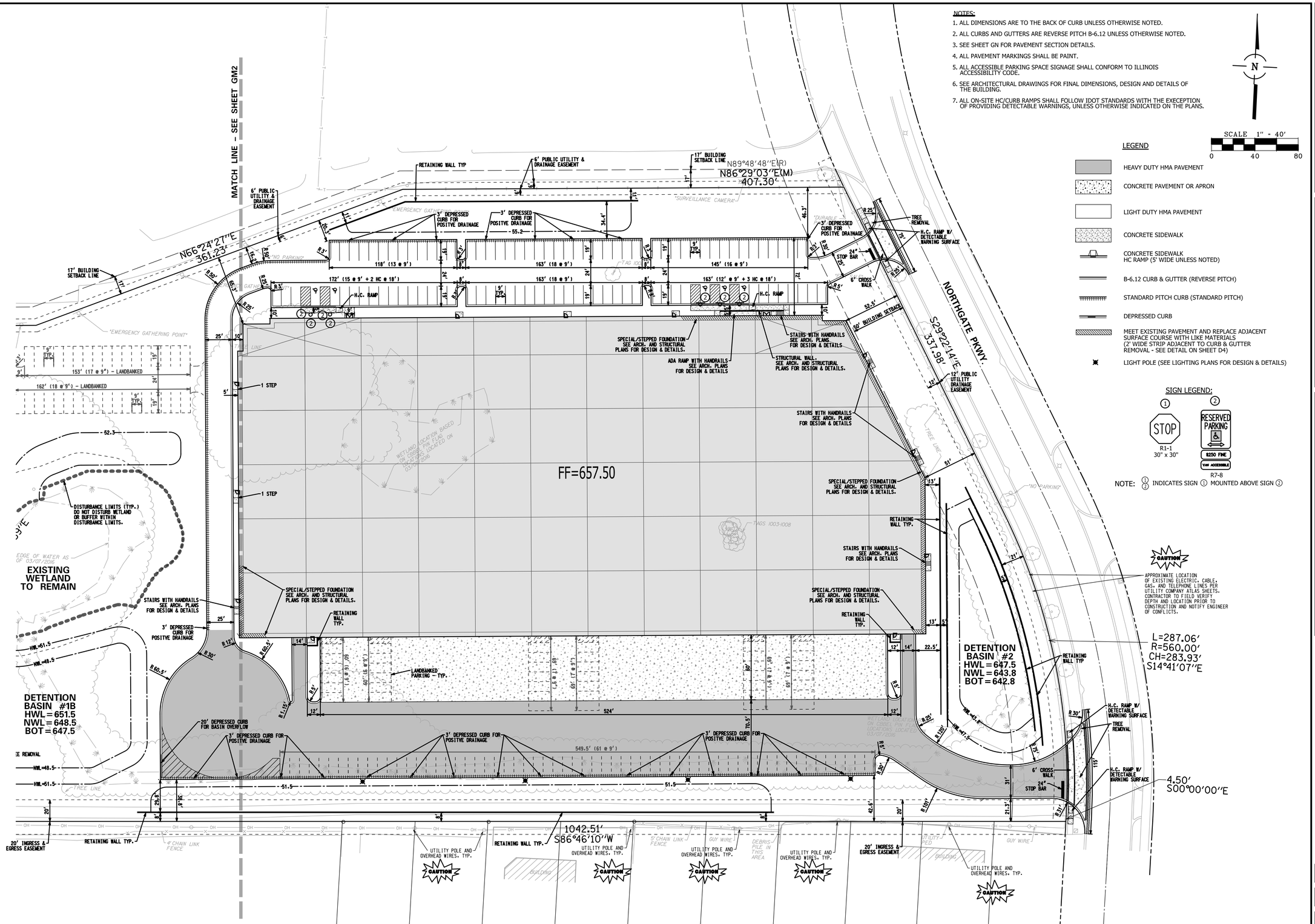

NO.	DATE	REMARKS

NO.	DATE	REMARKS

GEOMETRIC PLAN - 1

800 NORTHGATE PARKWAY
WHEELING, ILLINOIS

CONSULTING ENGINEERS
SITE DEVELOPMENT ENGINEERS
LAND SURVEYORS

9575 W. Higgins Road, Suite 700,
Rosemont, Illinois 60018
Phone: (847) 696-4060 Fax: (847) 696-4065

SPACECO INC.

FILENAME: 1642_04_GM01

DATE: 09/16/2016

JOB NO. 1642.04

SHEET GM1

N:\DGN\1642\1642.04-hamilton.partners\ENG\1642_04_GM01.dgn Default User=randerson

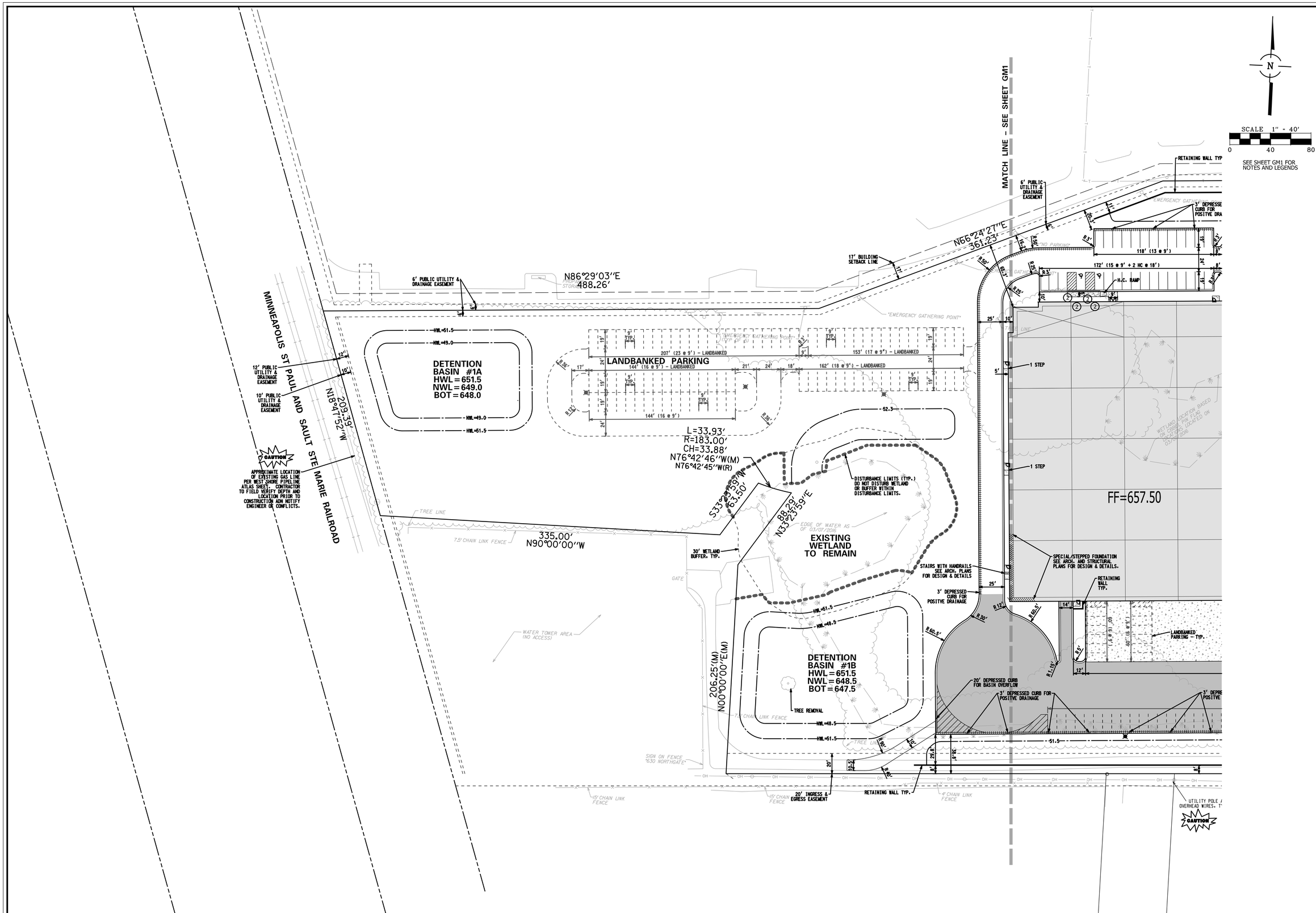

NO.	DATE	REMARKS

NO.	DATE	REMARKS

GEOMETRIC PLAN - 2

800 NORTHGATE PARKWAY
WHEELING, ILLINOIS

CONSULTING ENGINEERS
SITE DEVELOPMENT ENGINEERS
LAND SURVEYORS
9575 W. Higgins Road, Suite 700,
Rosemont, Illinois 60018
Phone: (847) 696-4060 Fax: (847) 696-4065
SPACECO INC.

FILENAME: 1642_04_GM02

DATE: 09/16/2016

JOB NO. 1642.04

SHEET GM2

N:\DGN\1642\1642.04-hamilton.partners\ENG\1642_04_GM02.dgn Default User=randerson

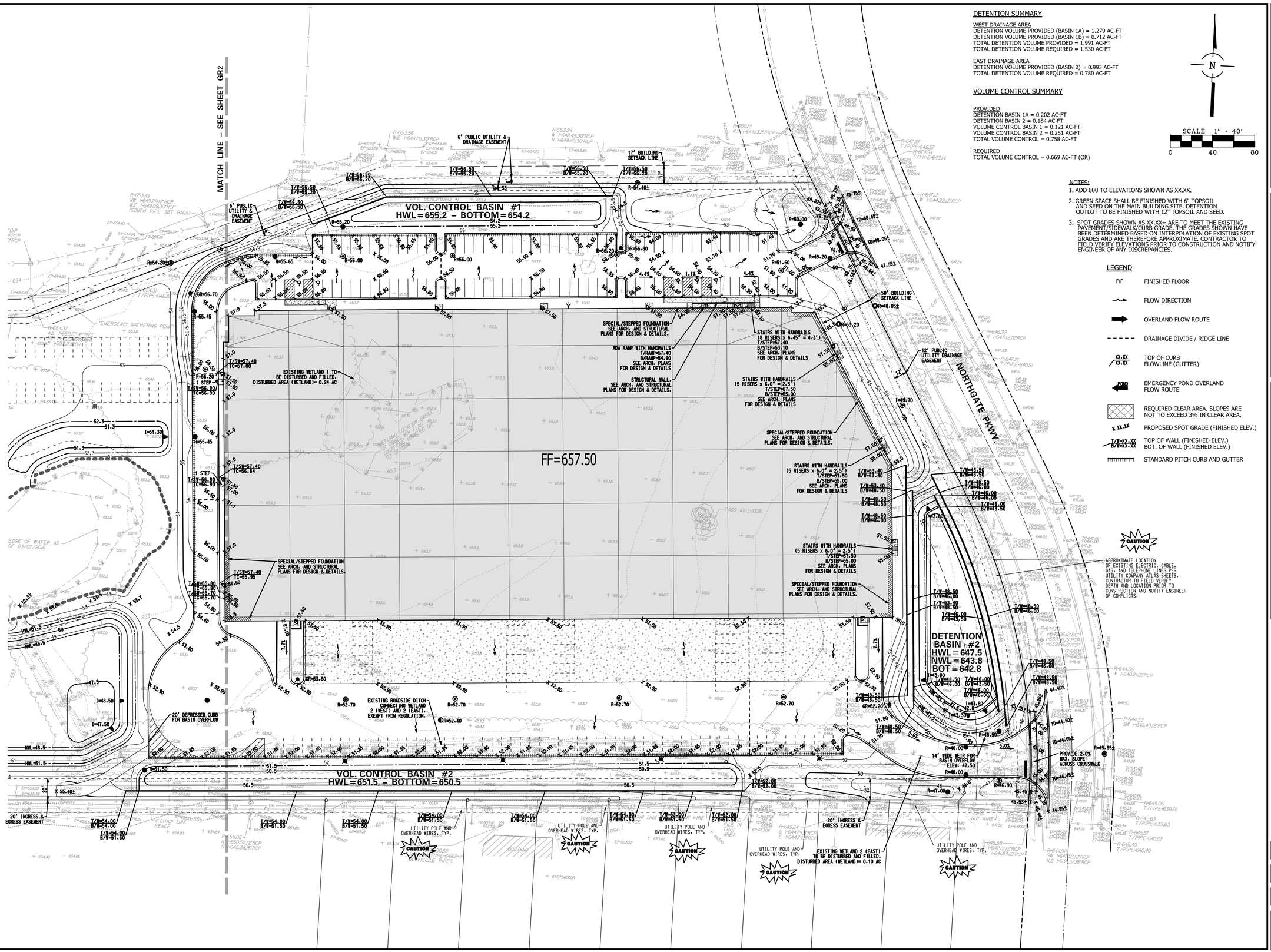

DETENTION SUMMARY

WEST DRAINAGE AREA
DETENTION VOLUME PROVIDED (BASIN 1A) = 1.279 AC-FT
DETENTION VOLUME PROVIDED (BASIN 1B) = 0.712 AC-FT
TOTAL DETENTION VOLUME PROVIDED = 1.991 AC-FT
TOTAL DETENTION VOLUME REQUIRED = 1.530 AC-FT

EAST DRAINAGE AREA
DETENTION VOLUME PROVIDED (BASIN 2) = 0.993 AC-FT
TOTAL DETENTION VOLUME REQUIRED = 0.780 AC-FT

VOLUME CONTROL SUMMARY

PROVIDED
DETENTION BASIN 1A = 0.202 AC-FT
DETENTION BASIN 2 = 0.184 AC-FT
VOLUME CONTROL BASIN 1 = 0.121 AC-FT
VOLUME CONTROL BASIN 2 = 0.251 AC-FT
TOTAL VOLUME CONTROL = 0.758 AC-FT

REQUIRED
TOTAL VOLUME CONTROL = 0.669 AC-FT (OK)

N

SCALE 1" = 40'
0 40 80

NOTES:

1. ADD 600 TO ELEVATIONS SHOWN AS XX.XX.
2. GREEN SPACE SHALL BE FINISHED WITH 6" TOPSOIL AND SEED ON THE MAIN BUILDING SITE. DETENTION OUTLOT TO BE FINISHED WITH 12" TOPSOIL AND SEED.
3. SPOT GRADES SHOWN AS XX.XX± ARE TO MEET THE EXISTING PAVEMENT/SIDEWALK/CURB GRADE. THE GRADES SHOWN HAVE BEEN DETERMINED BASED ON INTERPOLATION OF EXISTING SPOT GRADES AND ARE THEREFORE APPROXIMATE. CONTRACTOR TO FIELD VERIFY ELEVATIONS PRIOR TO CONSTRUCTION AND NOTIFY ENGINEER OF ANY DISCREPANCIES.

LEGEND

F/F	FINISHED FLOOR
	FLOW DIRECTION
	OVERLAND FLOW ROUTE
	DRAINAGE DIVIDE / RIDGE LINE
XX.XX / XX.XX	TOP OF CURB / FLOWLINE (GUTTER)
POND	EMERGENCY POND OVERLAND FLOW ROUTE
	REQUIRED CLEAR AREA. SLOPES ARE NOT TO EXCEED 3% IN CLEAR AREA.
x XX.XX	PROPOSED SPOT GRADE (FINISHED ELEV.)
T/W=XX.XX / B/W=XX.XX	TOP OF WALL (FINISHED ELEV.) / BOT. OF WALL (FINISHED ELEV.)
	STANDARD PITCH CURB AND GUTTER

NO.	DATE	REMARKS

NO.	DATE	REMARKS

GRADING PLAN - 1

800 NORTHGATE PARKWAY

WHEELING, ILLINOIS

CONSULTING ENGINEERS
SITE DEVELOPMENT ENGINEERS
LAND SURVEYORS
9575 W. Higgins Road, Suite 700,
Rosemont, Illinois 60018
Phone: (847) 696-4060 Fax: (847) 696-4065
SPACECO INC.

FILENAME: 1642_04_GR01

DATE: 09/16/2016

JOB NO. 1642.04

SHEET
GR1
7 OF 22

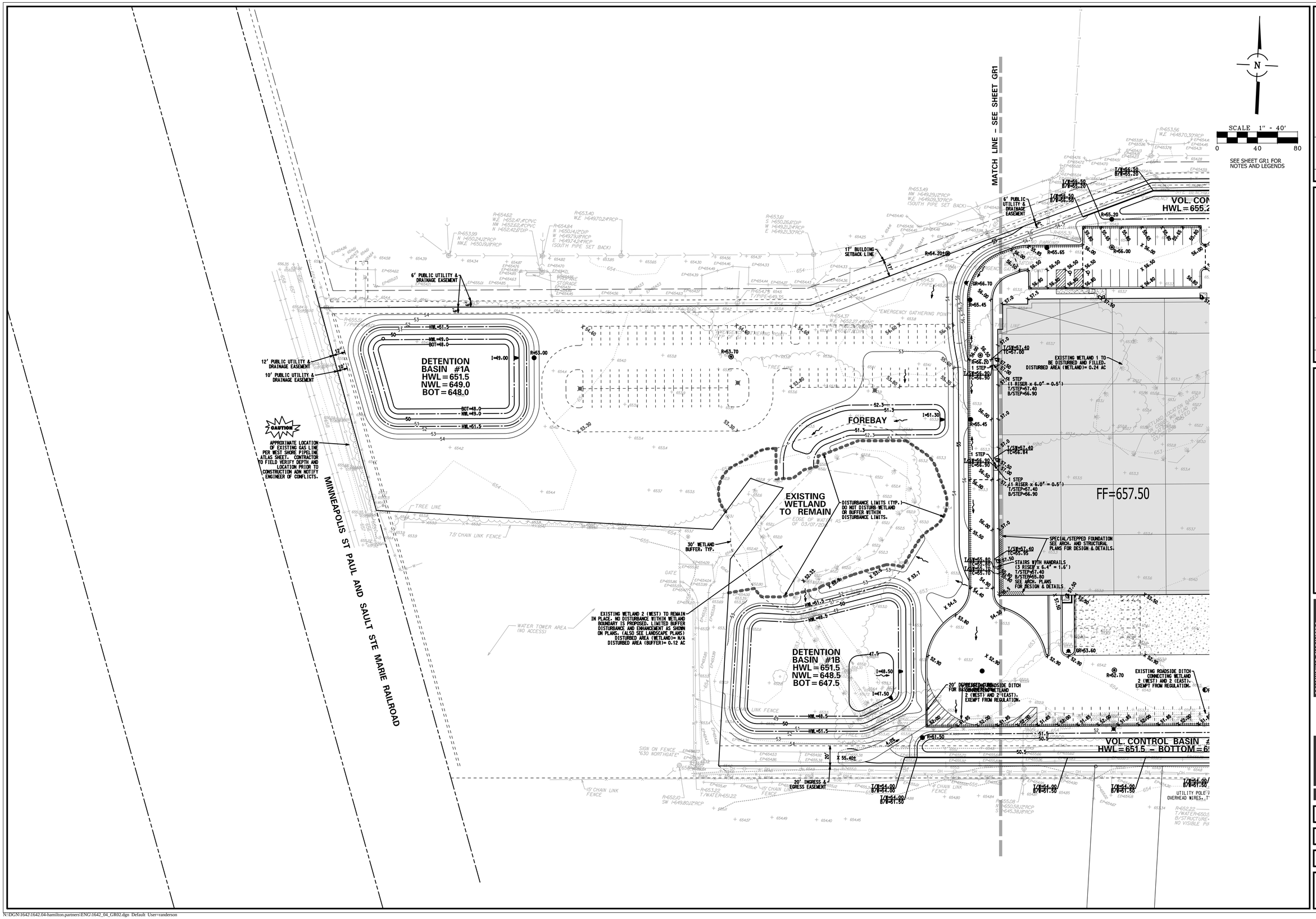

NO.	DATE	REMARKS

NO.	DATE	REMARKS

GRADING PLAN - 2

800 NORTHGATE PARKWAY
WHEELING, ILLINOIS

CONSULTING ENGINEERS
SITE DEVELOPMENT ENGINEERS
LAND SURVEYORS
9575 W. Higgins Road, Suite 700,
Rosemont, Illinois 60018
Phone: (847) 696-4060 Fax: (847) 696-4065
SPACECO INC.

FILENAME: 1642_04_GR02

DATE: 09/16/2016

JOB NO. 1642.04

SHEET GR2

N:\DGN\1642\1642.04-hamilton.partners\ENG\1642_04_GR02.dgn Default User=randerson

NOTES:

1. ADD 600.00 TO ELEVATIONS SHOWN AS XX.XX.
2. ALL STORM SEWERS SHALL BE RCP CL-IV UNLESS NOTED OTHERWISE.
3. ALL SANITARY SEWERS SHALL BE PVC SDR 26 UNLESS NOTED OTHERWISE.
4. ALL WATER MAINS SHALL BE D.I.P. CL 52 UNLESS NOTED OTHERWISE. MEGALUGS AND THRUST BLOCKS ARE REQUIRED FOR ALL WATERMAIN FITTINGS.
5. INDICATES TRENCH BACKFILL REQUIRED.
6. FRAME AND GRATE/LID FOR STORM SEWER STRUCTURES
   1C - MANHOLE - NEENAH R-2015 FRAME WITH CLOSED LID
   1P - CATCHBASIN,INLET - NEENAH R-2015 FRAME WITH TYPE "D" OPEN LID
   1G - NEENAH R-4340-B BEEHIVE LID
7. DESIGN OF WIRING AND CIRCUITRY OF LIGHTING WILL BE BY OTHERS.
8. ALL RESTRAINED WATER MAIN JOINTS SHALL BE U.S. PIPE "FIELD LOK" GASKET OR APPROVED EQUAL.
9. 4" PVC UNDERDRAIN.
10. WATER MAIN INSTALLATIONS WITHIN FILL MATERIAL SHALL BE MECHANICALLY RESTRAINED USING MEGA LUGS AND/OR FIELD LOK GASKETS.
11. SELECT EXCAVATED MATERIAL (CLASS IV) SHALL BE USED IN LIEU OF SELECT GRANULAR BACKFILL WHERE THE WATERMAIN PASSES OVER A SEWER WITH LESS THAN 18" OF VERTICAL SEPARATION.

N

SCALE 1" = 40'
0 40 80

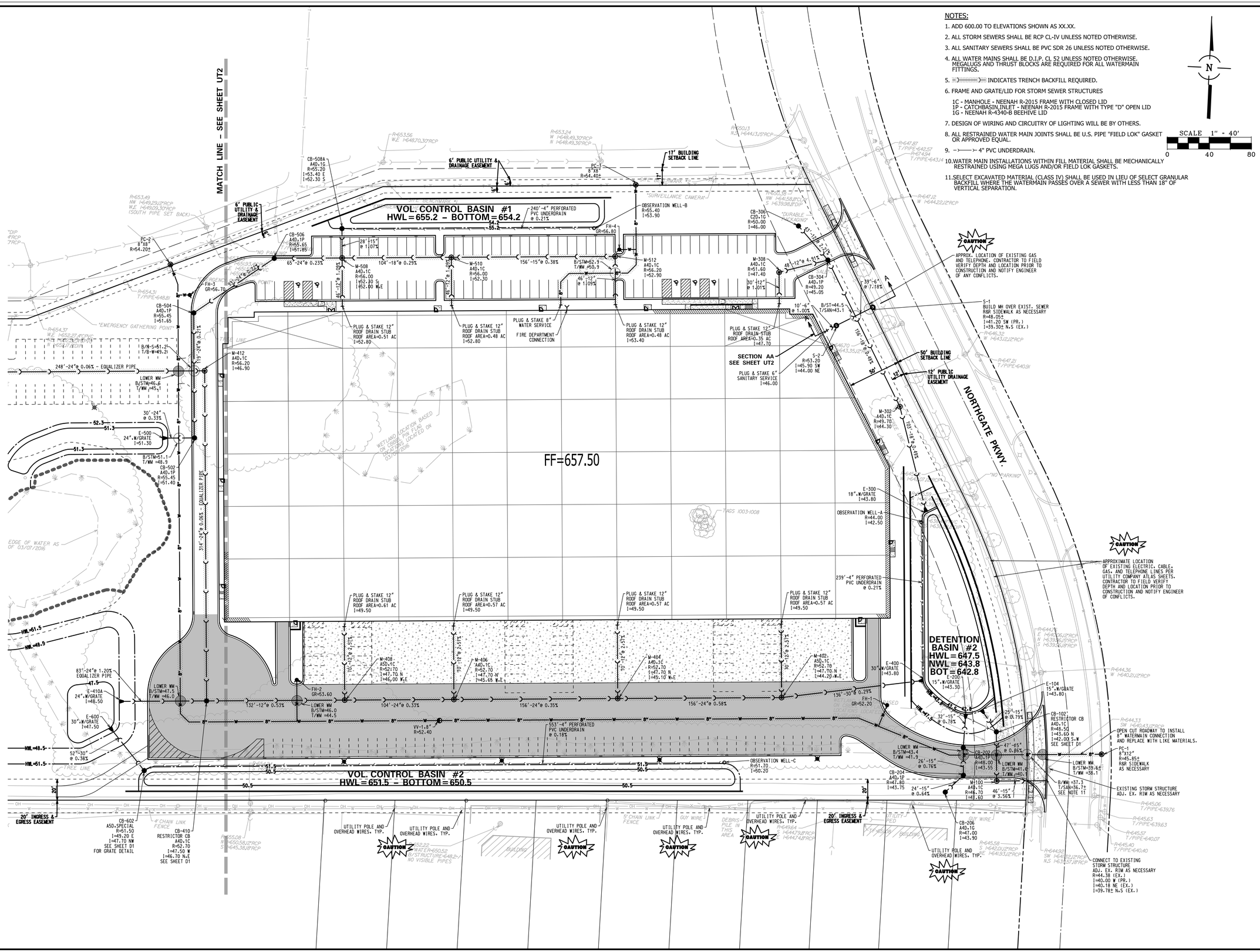

NO.	DATE	REMARKS

NO.	DATE	REMARKS

UTILITY PLAN - 1

800 NORTHGATE PARKWAY
WHEELING, ILLINOIS

CONSULTING ENGINEERS
SITE DEVELOPMENT ENGINEERS
LAND SURVEYORS
9575 W. Higgins Road, Suite 700,
Rosemont, Illinois 60018
Phone: (847) 696-4060 Fax: (847) 696-4065
SPACECO INC.

FILENAME: 1642_04_UT01

DATE: 09/16/2016

JOB NO. 1642.04

SHEET UT1
9 OF 22

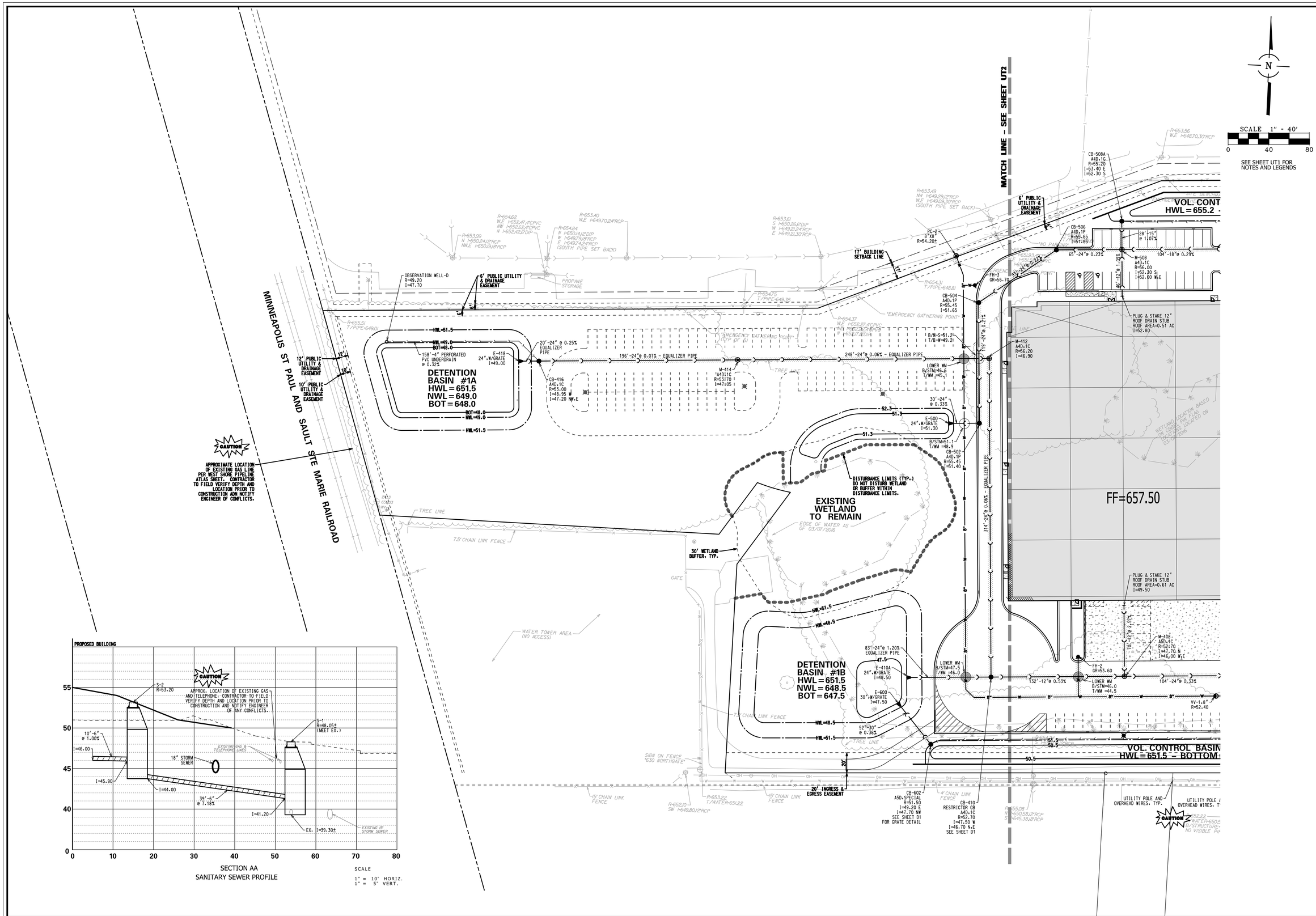

NO.	DATE	REMARKS

NO.	DATE	REMARKS

UTILITY PLAN - 2

800 NORTHGATE PARKWAY
WHEELING, ILLINOIS

CONSULTING ENGINEERS
SITE DEVELOPMENT ENGINEERS
LAND SURVEYORS
9575 W. Higgins Road, Suite 700,
Rosemont, Illinois 60018
Phone: (847) 696-4060 Fax: (847) 696-4065
SPACECO INC.

FILENAME: 1642_04_UT02

DATE: 09/16/2016

JOB NO. 1642.04

SHEET UT2

N:\DGN\1642\1642.04-hamilton.partners\ENG\1642_04_UT02.dgn Default User=randerson

This Soil Erosion & Sediment Control (SESC) Plan has been prepared to fulfill one of the requirements of the National Pollutant Discharge Elimination System (NPDES) General Permit No. ILR10_____. The SESC Plan should be maintained on site as an integral component of the Storm Water Pollution Prevention Plan (SWPPP). The SWPPP, including the SESC Plan, should be amended whenever there is a change in design, construction, operation, or maintenance, which has a significant effect on the potential for the discharge of pollutants to the Waters of the State and which has not otherwise been addressed in the SWPPP. The SWPPP, shall also be amended if it proves to be ineffective in eliminating or significantly minimizing pollutants, or in otherwise achieving the general objectives of controlling pollutants in storm water discharges associated with construction site activity. In addition, the SWPPP shall be amended to identify any new contractor and/or subcontractor that will implement a measure of the SWPPP.

1. SITE DESCRIPTION

A. The following is a description of the nature of the construction activity: The construction of an office/warehouse building with loading docks, internal drive aisles, parking stalls, and associated utilities.

B. The following is a description of the intended sequence of construction activities which will disturb soils for major portions of the construction site:

Describe proposed construction sequence, sample follows:

1) Install perimeter sediment control measures
a) Selective vegetation removal for silt fence installation
b) Silt fence installation
c) Construction fencing around areas not to be disturbed
d) Stabilized construction entrance
2) Clear and grub (as necessary)
3) Construct sediment trapping devices (sediment traps, sediment basins, etc.)
4) Construct detention facilities and outlet control structure with restrictor & temporary perforated riser
5) Strip topsoil, stockpile topsoil and grade site
6) Temporarily stabilize topsoil stockpiles (seed and silt fence around toe of slope)
7) Install storm sewer, sanitary sewer, watermain and associated inlet & outlet protection
8) Permanently stabilize detention basins with seed and erosion control blanket
9) Temporarily stabilize all areas including lots that have reached mass grade
10) Install roadways
11) Permanently stabilize all outlot areas
12) Install buildings and grade individual lots
13) Permanently stabilize lots
14) Remove all temporary soil erosion and sediment control measures after the site is stabilized with vegetation

C. The site has a total acreage of approximately 14 acres. Construction activity will disturb approximately 14 acres of the site.

D. 1) An estimated runoff coefficient of the site after construction activities are completed is 0.81 .
2) Existing data describing the soil or quality of any discharge from the site is included in _____.

E. Refer to Sheets GR1, GR2, AND SE1-SE4 for a site plan indicating:
1) drainage patterns;
2) approximate slopes anticipated before and after major grading activities;
3) locations where vehicles enter or exit the site and controls to minimize off-site sediment tracking;
4) areas of soil disturbance;
5) the location of major structural and nonstructural controls;
6) the location of areas where stabilization practices are expected to occur;
7) surface waters (including wetlands); and,
8) locations where storm water is discharged to a surface water.

F. 1) The name of the receiving water(s) is(are): Des Plaines River.
2) The name of the ultimate receiving water is: Des Plaines River.
3) The extent of wetland acreage at the site is 0.41 acres.

G. Potential sources of pollution associated with this construction activity may include:

- sediment from disturbed soils
- portable sanitary stations
- fuel tanks
- staging areas
- waste containers
- chemical storage areas
- oil or other petroleum products
- adhesives
- tar
- solvents
- detergents
- fertilizers
- raw materials (e.g., bagged portland cement)
- construction debris
- landscape waste
- concrete and concrete trucks
- litter

2. CONTROLS

This section of the SESC Plan addresses the various controls that should be implemented for each of the major construction activities described in the "Site Description" section. For each measure identified in the SWPPP, the contractor(s) or subcontractor(s) that will implement the measure should be identified. All contractors and subcontractors that are identified should be required to sign a copy of the certification statement from Part IV.F. of the ILR10 Permit (in accordance with Part VI.G. - Signatory Requirements, of the ILR10 Permit). All signed certification statements should be maintained in the SWPPP.

A. Approved State or Local Plans

The management practices, controls and other provisions contained in the SWPPP should be at least as protective as the requirements contained in the Illinois Environmental Protection Agency's (IEPA) and the United States Department of Agriculture's Natural Resource Conservation Service Illinois Urban Manual, 2012. Requirements specified in sediment and erosion control site plans or site permits or storm water management site plans or site permits approved by local officials that are applicable to protecting surface water resources are, upon submittal of a Notice of Intent (NOI) to be authorized to discharge under the ILR10 permit, incorporated by reference and are enforceable under the ILR10 permit even if they are not specifically included in a SWPPP required under the ILR10 permit. This provision does not apply to provisions of master plans, comprehensive plans, non-enforceable guidelines or technical guidance documents that are not identified in a specific plan or permit that is issued for the construction site.

The soil erosion and sediment control measures for this site should meet the requirements of the following agencies:

- Village of Wheeling
- North Cook SWCD
- IEPA
- MWRDGC

B. Control Implementation Schedule

Best Management Practices will be implemented on an as-needed basis to protect water quality. Perimeter controls of the site should be installed prior to soil disturbance (excluding soil disturbance necessary to install the controls), including demolition activities. Perimeter controls, including the silt fence, should be actively maintained until final stabilization of those portions of the site upward of the perimeter control. Stabilized construction entrance(s) and sediment traps should be installed as described in the intended sequence of construction activities. The contractor is responsible for the adequate protection (including sediment control) of existing sewers and sewer structures during construction operations. As necessary, the appropriate sediment control measure should be installed prior to land disturbing activities.

Stabilization measures should be initiated where construction activities have temporarily or permanently ceased, in accordance with Local and State requirements, as described below. Once construction activity in an area has permanently ceased, that area should be permanently stabilized. Temporary perimeter controls should be removed after final stabilization of those portions of the site upward of the perimeter control.

C. Erosion and Sediment Controls

The appropriate soil erosion and sediment controls should be implemented on site and should be modified to reflect the current phase of construction. All temporary sediment and erosion control measures should be repaired or replaced as soon as practicable to maintain NPDES compliance. Permittee or an authorized agent is responsible for inspecting all sediment and erosion control measures at a minimum of every 7 calendar days and within 24 hours, or one working day, of the end of a 0.5-inch (or greater) rain event.

Unless otherwise indicated, all vegetative and structural erosion and sediment control practices should be installed to the Standard Practice. The contractor is responsible for the installation of any additional erosion and sediment control measures necessary to minimize erosion and sedimentation as determined by the Engineer or Primary Contact.

1) Stabilization Practices - Areas that will not be paved or covered with non-erosive material should be stabilized using procedures in substantial conformance with the Illinois Urban Manual. This SESC Plan includes site-specific soil erosion and sediment control measures. Additional erosion controls should be implemented as necessary, as determined by the Engineer or Primary Contact.

The following temporary and permanent stabilization practices, at a minimum, are proposed:

- permanent seeding
- temporary seeding
- erosion control blanket

Site-specific scheduling of the implementation of these practices is included in the Soil Protection Chart. A record of the dates when major grading activities occur, when construction activities cease on a portion of the site, and when stabilization measures are initiated should be included in the SWPPP.

Stabilization of disturbed areas must be initiated within 1 working day of permanent or temporary cessation of earth activities and shall be completed as soon as possible but not later than 14 days from the initiation of stabilization work in an area. Exceptions to these time frames are specified below.

a. Where the initiation of stabilization measures is precluded by snow cover, stabilization measures shall be initiated as soon as practicable.

b. On areas where construction activity has temporarily ceased and will resume after 14 days, a temporary stabilization method can be used. Temporary stabilization techniques and materials shall conform to the SWPPP.

2) Structural Practices - Provided below is a description of structural practices that should be implemented, to the degree attainable to divert flows from exposed soils, store flows or otherwise limit runoff and the discharge of pollutants from exposed areas of the site. Structural practices should be placed on upland soils to the degree practicable. The installation of the following devices may be subject to Section 404 of the Clean Water Act:

- stabilized construction entrance
- silt fence
- sediment traps (provide locations and dimensions in plan set)

D. Storm Water Management

Provided below is a description of measures that will be installed during the construction process to control the pollutants in storm water discharges that will occur after the construction operations have been completed. The installation of these devices may be subject to Section 404 of the Clean Water Act.

1) The practices selected for implementation were determined on the basis of technical guidance contained in IEPA's Illinois Urban Manual, Federal, State, and/or Local Requirements. The storm water management measures include:

- detention basins

2) Velocity dissipation devices, such as rip-rap aprons at flared end sections or level spreaders, shall be placed at discharge locations and along the length of any outfall channel as necessary to provide a non-erosive velocity flow from the structure to a watercourse so that the natural, physical, and biological characteristics and functions are maintained and protected (e.g., maintenance of hydrologic conditions, such as the hydroperiod and hydrodynamics present prior to the initiation of construction activities).

E. Waste Management

Solid waste materials including trash, construction debris, excess construction materials, machinery, tools and other items will be collected and disposed of off site by the contractor. The contractor is responsible to acquire the permit required for such disposal. Burning on site will not be permitted. No solid materials, including building materials, shall be discharged to Waters of the State, except as authorized by a Section 404 permit. All waste materials should be collected and stored in approved receptacles. No wastes should be placed in any location other than in the approved containers appropriate for the materials being discarded. There should be no liquid wastes deposited into dumpsters or other containers which may leak. Receptacles with deficiencies should be replaced as soon as possible and the appropriate clean-up procedure should take place, if necessary. Construction waste material is not to be buried on site. Waste disposal should comply with all Local, State, and Federal regulations.

On-site hazardous material storage should be minimized and stored in labeled, separate receptacles from non-hazardous waste. All hazardous waste should be disposed of in the manner specified by Local or State regulation or by the manufacturer.

F. Concrete Waste Management

Concrete waste or washout should not be allowed in the street or allowed to reach a storm water drainage system or watercourse. When practicable, a sign should be posted at each location to identify the washout. To the extent practicable, concrete washout areas should be located a reasonable distance from a storm water drainage inlet or watercourse, and should be located at least 10 feet behind the curb, if the washout area is adjacent to a paved road. A stabilized entrance that meets Illinois Urban Manual standards should be installed at each washout area.

The containment facilities should be of sufficient volume to completely contain all liquid and concrete waste materials including enough capacity for anticipated levels of rainwater. The dried concrete waste material should be picked up and disposed of properly when 66% capacity is reached. Hardened concrete can be properly recycled and used again on site (as approved by the Engineer) or hauled off site to an appropriate landfill.

G. Concrete Cutting

Concrete waste management should be implemented to contain and dispose of saw-cutting slurries. Concrete cutting should not take place during or immediately after a rainfall event. Waste generated from concrete cutting should be cleaned-up and disposed into the concrete washout facility as described above.

H. Vehicle Storage and Maintenance

When not in use, construction vehicles should be stored in a designated area(s) outside of the regulatory floodplain, away from any natural or created watercourse, pond, drainage-way or storm drain. Controls should be installed to minimize the potential of runoff from the storage area(s) from reaching storm drains or water courses. Vehicle maintenance (including both routine maintenance as well as on-site repairs) should be made within a designated area(s) to prevent the migration of mechanical fluids (oil, antifreeze, etc.) into watercourses, wetlands or storm drains. Drip pans or absorbent pads should be used for all vehicle and equipment maintenance activities that involve grease, oils, solvents, or other vehicle fluids. Construction vehicles should be inspected frequently to identify any leaks; leaks should be repaired immediately or the vehicle should be removed from site. Dispose of all used oil, antifreeze, solvents and other vehicle-related chemicals in accordance with Environmental Protection Agency (USEPA) and IEPA regulations and per Material Safety Data Sheet (MSDS) and/or manufacturer instructions. Contractors should immediately report spills to the Primary Contact.

I. Material Storage and Good Housekeeping

Materials and/or contaminants should be stored in a manner that minimizes the potential to discharge into storm drains or watercourses. An on-site area should be designated for material delivery and storage. All materials kept on site should be stored in their original containers with legible labels, if any, and if possible, under a roof or other enclosure. Labels should be replaced if damaged or difficult to read. Bermed-off storage areas are an acceptable method to prevent contamination of storm water. MSDS should be available for referencing clean-up procedures. Any release of chemicals/contaminants should be immediately cleaned up and disposed of properly. Contractors should immediately report all spills to the Primary Contact, who should notify the appropriate agencies, if needed.

To reduce the risks associated with hazardous materials on site, hazardous products should be kept in original containers unless they are not re-sealable. The original labels and MSDS should be retained on site at all times. Hazardous materials and all other material on site should be stored in manufacturer or MSDS specifications. When disposing of hazardous materials, follow manufacturer or Local and State recommended methods.

The following good housekeeping practices should be followed on site during the construction project:

- An effort should be made to store only enough product required to do the job.
- All materials stored on site should be stored in a neat, orderly manner in their appropriate containers and adequately protected from the environment.
- Products should be kept in their original containers with the original manufacturer's label.
- Substances should not be mixed with one another unless recommended by the manufacturer.
- Operations should be observed as necessary to ensure proper use and disposal of materials on site.
- Whenever possible, all of a product should be used up before disposing of the container.
- Manufacturer's recommendations for proper use and disposal should be followed.

J. Management of Portable Sanitary Stations

To the extent practicable, portable sanitary stations should be located in an area that does not drain to any protected natural areas, Waters of the State, or storm water structures and should be anchored to the ground to prevent from tipping over. Portable sanitary stations located on impervious surfaces should be placed on top of a secondary containment device, or be surrounded by a control device (e.g., gravel-bag berm). The contractor should not create or allow unsanitary conditions. Sanitary waste should be disposed of in accordance with applicable State and/or Local regulations.

K. Spill Prevention and Clean-Up Procedures

Manufacturer's recommended methods for spill clean-up should be available and site personnel should be made aware of the procedures and the location of the information and clean-up supplies. Materials and equipment necessary for spill clean-up should be kept in the material storage area on site. Equipment and materials should include, but are not limited to: rags, absorbent mats, mops, rags, gloves, goggles, kitty litter, sand, sawdust and plastic and/or metal trash containers specifically for this purpose.

Discharges of a hazardous substance or oil caused by a spill (e.g., a spill of oil into a separate storm sewer or Waters of the State) are not authorized by the ILR10 permit. If a spill occurs, notify the Primary Contact immediately. The construction site should have the capacity to control, contain, and remove spills, if they occur. Spills should be cleaned up immediately (after discovery) in accordance with MSDS and should not be buried on site or washed into storm sewer drainage inlets, drainage-ways, or Waters of the State.

Spills in excess of Federal Reportable Quantities (as established under 40 CFR Parts 110, 117, or 302), should be reported to the National Response Center by calling (800) 424-8802. MSDS often include information on Federal Reportable Quantities for materials. Spills of toxic or hazardous materials should be reported to the appropriate State or Local government agency, as required. When cleaning up a spill, the area should be kept well ventilated and appropriate personal protective equipment should be used to minimize injury from contact with a hazardous substance.

In addition to the good housekeeping and other management practices discussed in the previous sections of these Notes, the following minimum practices should be followed to reduce the risk of spills:

- On-site vehicles should be monitored for leaks and should receive regular preventative maintenance to reduce the chance of leakage.
- Petroleum products should be stored in tightly sealed and clearly labeled containers.
- Contractors should follow the manufacturer's recommendations for proper use, storage, and disposal of materials. Excess materials should be disposed of according to the manufacturer's instructions or State and Local regulations, and should not be discharged to the storm sewer or waterbody.

L. De-Watering Operations

During de-watering/pumping operations, only uncontaminated water should be allowed to discharge to protected natural areas, Waters of the State, or to a storm sewer system (in accordance with Local permits). Inlet hoses should be placed in a stabilized sump pit or floated at the surface of the water in order to limit the amount of sediment intake. Pumping operations may be discharged to a stabilized area that consists of an energy dissipating device (e.g., stone), sediment filter bag, or both. Adequate erosion controls should be used during de-watering operations as necessary. Stabilized conveyance channels should be installed to direct water to the desired location as applicable. Additional control measures may be installed at the outlet area at the discretion of the Primary Contact or Engineer.

M. Off-Site Vehicle Tracking

The site should have one or more stabilized construction entrances in conformance with the Plan details. Stabilized construction entrance(s) should be installed to help reduce vehicle tracking of sediments. Streets should be swept as needed to reduce excess sediment, dirt, or stone tracked from the site. Maintenance may include top dressing the stabilized entrance with additional stone and removing top layers of stone and sediment, as needed. Vehicles hauling erodible material to and from the construction site should be covered with a tarp.

N. Topsoil Stockpile Management

If topsoil is to be stockpiled at the site, select a location so that it will not erode, block drainage, or interfere with work on site. Topsoil stockpiles should not be located in the 100-year floodplain or designated buffer protecting Waters of the State. During construction of the project, soil stockpiles should be stabilized or protected with sediment trapping measures. Perimeter controls, such as silt fence, should be placed around the stockpile immediately. Stabilization of the stockpile should be completed if the stockpile is to remain undisturbed for longer than fourteen days.

O. Dust Control

Dust control should be implemented on site as necessary. Repetitive treatment should be applied as needed to accomplish control when temporary dust control measures are used. A water truck should be present on site (or available) for sprinkling/irrigation to limit the amount of dust leaving the site. Watering should be applied daily (or more frequently) to be effective. Caution should be used not to overwater, as that may cause erosion.

If field observations indicate that additional protection from wind erosion (in addition to, or in place of watering) is necessary, alternative dust suppressant controls should be implemented at the discretion and approval of the Engineer and/or Primary Contact.

Street cleaning should also be used as necessary to control dust. Paved areas that have soil on them from the construction site should be cleaned as needed, utilizing a street sweeper or bucket-type endloader or scraper at the direction of the Engineer and/or Primary Contact.

3. MAINTENANCE

Maintenance of the controls incorporated into this project should be performed as needed to assure their continued effectiveness. This includes prompt and effective repair and/or replacement of deficient control measures. The following is a description of procedures that should be used to maintain, in good and effective operating condition, erosion and sediment control measures and other protective measures identified in the SESC Plan and Standard Specifications.

Dust control: When temporary dust control measures are used, repetitive treatment should be applied as needed to accomplish control.

Sediment filter bags: Sediment filter bags should be installed on pump outlet hoses that discharge off site or to sensitive on-site areas, and should be placed in an area that allows for the bag to be removed without producing a sediment discharge. The bags should be inspected frequently and repaired or replaced as needed.

Silt fence: Silt fences should be inspected regularly for undercutting where the fence meets the ground, overtopping, and tears along the length of the fence. Deficiencies should be repaired immediately. Remove accumulated sediments from the fence base when the sediment reaches one-half the fence height. During final stabilization, properly dispose of any sediment that has accumulated on the silt fence. Alternative sediment control measures should be considered for areas where silt fence continually fails.

Stabilized construction entrance: The stabilized construction entrances should be maintained to prevent tracking of sediment onto public streets. Maintenance includes top dressing with additional stone and removing top layers of stone and sediment. The sediment tracked onto the public right-of-way should be removed immediately.

Temporary sediment traps: Temporary sediment traps should be inspected after each period of significant rainfall. Remove sediment and restore the trap to its original dimensions when the sediment has accumulated to one-half the design depth of the permanent pool. Place the sediment that is removed in a designated disposal area. Check the structure for damage from erosion or piping. After all sediment-producing areas have been permanently stabilized, remove the structure and all unstable sediment. Grade the area to blend with the adjoining areas and stabilize properly.

4. INSPECTIONS

The Permittee (or their authorized representative) will be responsible for conducting site inspections in compliance with the ILR10 NPDES Permit. After each inspection, a report should be prepared by the qualified personnel who performed the inspection. The inspection report should be maintained on site as part of the SWPPP.

Inspections should be conducted at least once every seven calendar days and within 24 hours or by the end of the following work day, of the end of a storm event that is 0.5 inches or greater, or equivalent snowfall.

Inspections may be reduced to once per month when construction activities have ceased due to frozen conditions. Weekly inspections will recommence when construction activities are conducted, or if there is 0.5" or greater rain event, or a discharge due to snowmelt occurs.

Each inspection should include the following components:

A. Disturbed areas and areas used for the storage of materials that are exposed to precipitation should be inspected for evidence of, or the potential for, pollutants entering the drainage system. The erosion and sediment control measures identified in the SWPPP should be observed to ensure that they have been installed and are operating correctly. Where discharge points are accessible, they should be inspected to ascertain whether erosion control measures are effective in preventing significant impacts to the receiving waters. Locations where vehicles enter or exit the site should be inspected for off-site sediment tracking. All pumping operations and other potential non-storm water discharge sources should also be inspected.

B. Based on the results of the inspection, the description of potential pollutant sources identified, and the pollution prevention measures described in the SWPPP should be revised, as appropriate, as soon as practicable after the inspection. The modifications (if any, shall provide for timely implementation of any changes to the SWPPP within 7 calendar days following the inspection.

C. A report summarizing the scope of the inspection, name(s) and qualifications of personnel making the inspection, the date(s) of the inspection, major observations relating to the implementation of the SWPPP, and actions taken in accordance with paragraph B, above should be made and retained as part of the SWPPP for at least three years from the date that permit coverage expires or is terminated. The report shall be signed in accordance with Part VI.G. (Signatory Requirements) of the ILR10 NPDES Permit.

D. The Permittee shall notify the appropriate agency field operations section office by e-mail at: epa.swnonpoint@illinois.gov, telephone or fax within 24 hours of any incidence of non-compliance for any violation of the storm water pollution prevention plan observed during any inspection conducted or for violation of any condition of this permit. The Permittee should complete and submit within 5 days an "Incidence of Non-Compliance" (ION) report for any violation of the SWPPP observed during an inspection conducted, including those not required by the SWPPP. Submission should be on forms provided by IEPA and include specific information on the cause of non-compliance, actions which were taken to prevent any further causes of non-compliance, and a statement detailing any environmental impact, which may have resulted from the non-compliance.

E. All reports of non-compliance shall be signed by a responsible authority as defined in Part VI.G. (Signatory Requirements), of the ILR10 NPDES Permit.

F. After the initial contact has been made within the appropriate agency field operations section office, all reports of non-compliance shall be mailed to IEPA at the following address:

Illinois Environmental Protection Agency
Division of Water Pollution Control
Compliance Assurance Section
1021 North Grand Avenue East
Post Office Box 19276
Springfield, Illinois 62794-9276

5. NON-STORM WATER DISCHARGES

Except for flows from fire fighting activities, possible sources of non-storm water that may be combined with storm water discharges associated with the proposed activity, are described below:

- Fire fighting activities
- Fire hydrant flushings
- Water used to wash vehicles where detergents are not used
- Water used to control dust
- Potable water sources including uncontaminated waterline flushings
- Landscape irrigation drainages
- Routine external building washdown which does not use detergents
- Pavement wash waters where spills or leaks of toxic or hazardous materials have not occurred (unless spilled material have been removed) and where detergents have not been used.
- Uncontaminated air conditioning condensate
- Springs
- Irrigation ditches
- Uncontaminated ground water
- Foundation or footing drains where flows are not contaminated with process materials such as solvents

6. PROHIBITED NON-STORMWATER DISCHARGES

- Concrete and wastewater from washout of concrete (unless managed by an appropriate control)
- Drywall compound
- Wastewater from washout and cleanout of stucco, paint
- Form release oils
- Curing compounds and other construction materials
- Fuels, oils, or other pollutants used in vehicle or equipment operation and maintenance
- Soaps, solvents, or detergents
- Toxic or hazardous substances from a spill or other release
- Any other pollutant that could cause or tend to cause water pollution

Pollution prevention measures should be implemented for non-storm water components of the discharge.

STABILIZATION TYPE	JAN.	FEB.	MAR.	APR.	MAY	JUNE	JULY	AUG.	SEPT.	OCT.	NOV.	DEC.
PERMANENT SEEDING			A			*	*					
DORMANT SEEDING	B										B	
TEMPORARY SEEDING			C				D					
SODDING			E**									
MULCHING	F											

A KENTUCKY BLUEGRASS 90 LBS/ACRE MIXED WITH PERENNIAL RYEGRASS 30 LBS/ACRE.

B KENTUCKY BLUEGRASS 135 LBS/ACRE MIXED WITH PERENNIAL RYEGRASS 45 LBS/ACRE + STRAW MULCH 2 TONS/ACRE.

C SPRING OATS 100 LBS/ACRE

D WHEAT OR CEREAL RYE 150 LBS/ACRE.

E SOD

F STRAW MULCH 2 TONS/ACRE.

* IRRIGATION NEEDED DURING JUNE AND JULY.

** IRRIGATION NEEDED FOR 2 TO 3 WEEKS AFTER APPLYING SOD.

SOIL PROTECTION CHART

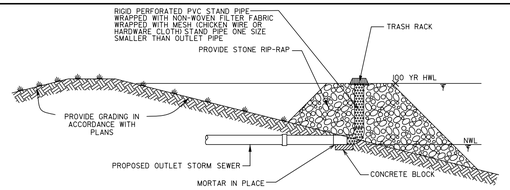

PLAN CODE: PR

PERFORATED RISER DETAIL

NOT TO SCALE

1. THE PERFORATED RISER SHALL BE PROVIDED AS PART OF THE SEDIMENT AND EROSION CONTROL MEASURES DURING CONSTRUCTION AND IN CONJUCTION WITH THE CONSTRUCTION OF THE DETENTION BASIN.

2. WHEN THE DETENTION BASIN AND UPSTREAM TRIBUTARY DRAINAGE AREAS ARE REVEGETATED, AND WHEN DIRECTED BY THE ENGINEER, THE PERFORATED RISER SHALL BE REMOVED AND THE BASIN OUTFALL STRUCTURES SHALL BE CONSTRUCTED AND THE GRADING RESTORED IN ACCORDANCE WITH THE PLANS.

CONTRACTOR CERTIFICATION

I CERTIFY UNDER PENALTY OF LAW THAT I UNDERSTAND THE TERMS AND CONDITIONS OF THE GENERAL NATIONAL POLLUTANT DISCHARGE ELIMINATION SYSTEM (NPDES) PERMIT (ILR10) THAT AUTHORIZES THE STORM WATER DISCHARGES ASSOCIATED WITH INDUSTRIAL ACTIVITY FROM THE CONSTRUCTION SITE IDENTIFIED AS PART OF THIS CERTIFICATION.

PROJECT: 800 NORTHGATE PARKWAY _____

PERMIT #: ILR10 _____

_____ DATE

_____ CONTRACTOR SIGNATURE

_____ TELEPHONE NUMBER

_____ PRINTED NAME & TITLE

_____ NAME OF CONTRACTING FIRM

_____ STREET ADDRESS

_____ CITY, STATE, ZIP CODE

TRADE/ RESPONSIBILITIES: _____

NOTE:
ALL CONTRACTORS PERFORMING WORK ON THIS SITE ARE REQUIRED TO SIGN A CONTRACTOR CERTIFICATION STATEMENT AS ILLUSTRATED ABOVE. THE SIGNED STATEMENTS WILL BE MAINTAINED ON THE SITE WITH THE SWPPP.

OWNER SWPPP CERTIFICATION

PROJECT: 800 NORTHGATE PARKWAY _____

PERMIT #: ILR10 _____

I CERTIFY UNDER PENALTY OF LAW THAT THIS DOCUMENT AND ALL ATTACHMENTS WERE PREPARED UNDER MY DIRECTION OR SUPERVISION IN ACCORDANCE WITH A SYSTEM DESIGNED TO ASSURE THAT QUALIFIED PERSONNEL PROPERLY GATHERED AND EVALUATED THE INFORMATION SUBMITTED. BASED ON MY INQUIRY OF THE PERSON OR PERSONS WHO MANAGE THE SYSTEM, OR THOSE PERSONS DIRECTLY RESPONSIBLE FOR GATHERING THE INFORMATION, THE INFORMATION IS, TO THE BEST OF MY KNOWLEDGE AND BELIEF, TRUE, ACCURATE, AND COMPLETE. I AM AWARE THAT THERE ARE SIGNIFICANT PENALTIES FOR SUBMITTING FALSE INFORMATION, INCLUDING THE POSSIBILITY OF FINE AND IMPRISONMENT FOR KNOWING VIOLATIONS.

_____ SIGNATURE OF OWNER

_____ DATE

_____ PRINTED NAME OF OWNER

NOTE:
THE CERTIFICATION ILLUSTRATED ABOVE SHALL BE SIGNED BY THE OWNER LISTED ON THE NOTICE OF INTENT IN ACCORDANCE WITH PART VI.G. OF THE ILR10 NPDES PERMIT. THE SIGNED STATEMENT SHALL BE MAINTAINED ON THE SITE WITH THE SWPPP.

OUTFALL NAME OR NUMBER	INLET PIPE SIZE d (IN)	VELOCITY (F/S)	LENGTH OF APRON L (FT)	RIPRAP GRADATION	WIDTH OF APRON U/S FACE 3d (FT)	WIDTH OF APRON D/S FACE 3d+L (FT)	DEPTH OF RIPRAP Y (IN)

NO.	DATE	REMARKS

NO.	DATE	REMARKS

SOIL EROSION AND SEDIMENT CONTROL PLAN - 1

800 NORTHGATE PARKWAY
WHEELING, ILLINOIS

CONSULTING ENGINEERS
SITE DEVELOPMENT ENGINEERS
LAND SURVEYORS
9575 W. Higgins Road, Suite 700,
Rosemont, Illinois 60018
Phone: (847) 696-4060 Fax: (847) 696-4065
SPACECO INC.

FILENAME: 1642_04_SE01

DATE: 09/16/2016

JOB NO. 1642.04

SHEET SE1

N:\DGN\1642\1642.04-hamilton.partners\ENG\1642_04_SE01.dgn Default User=randerson

AUTOCAD2006

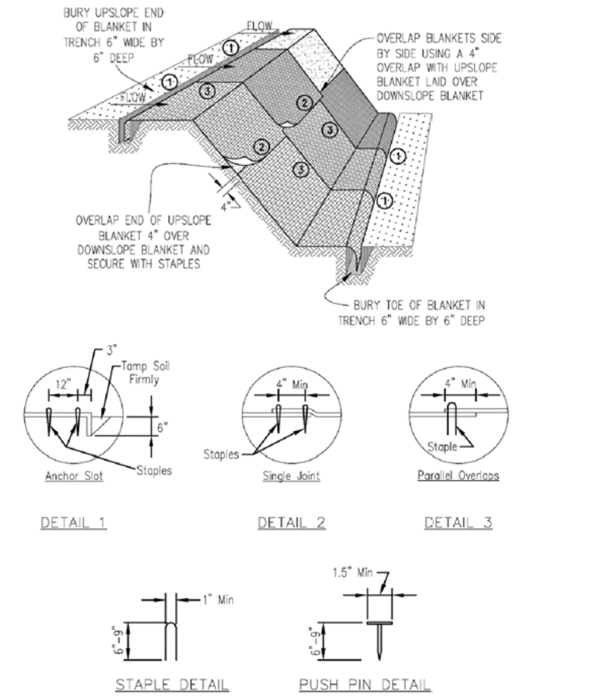

NOTES:

1. Staples shall be placed in a diamond pattern at 2 per s.y. for stiched blankets. Non-stiched shall use 4 staples per s.y. of material. This equates to 200 staples with stiched blanket and 400 stapels with non-stiched blanket per 100 s.y. of material.
2. Staple or push pin lengths shall be selected based on soil type and conditions. (minimum staple length is 6")
3. Erosion control material shall be placed in contact with the soil over a prepared seedbed.
4. All anchor slots shall be stapled at approximately 12" intervals.

PLAN CODE: (EB)

EROSION CONTROL

INLET PROTECTION - EXCAVATED DRAIN PLAN

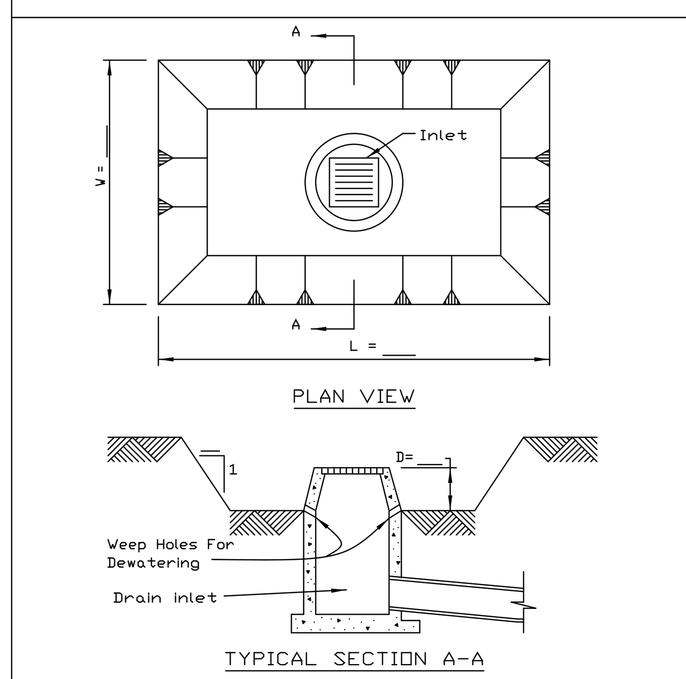

NOTES:
1. Sediment shall be removed and the trap restored to its original dimensions when the sediment has accumulated to 1/2 the design depth of the trap. Removed sediment shall be deposited in a suitable area and in such a manner that it will not erode.
2. The sediment trap shall be removed and the area stabilized when the constructed drainage area has been properly stabilized.
3. All cut slopes shall be 2:1 or flatter.

PLAN CODE: (IP)

REFERENCE Project ____ Designed ____ Date ____ Checked ____ Date ____ Approved ____ Date ____ | NRCS Natural Resources Conservation Service | STANDARD DWG. NO. IL-555 SHEET 1 OF 1 DATE 3-11-93

LEVEL SPREADER

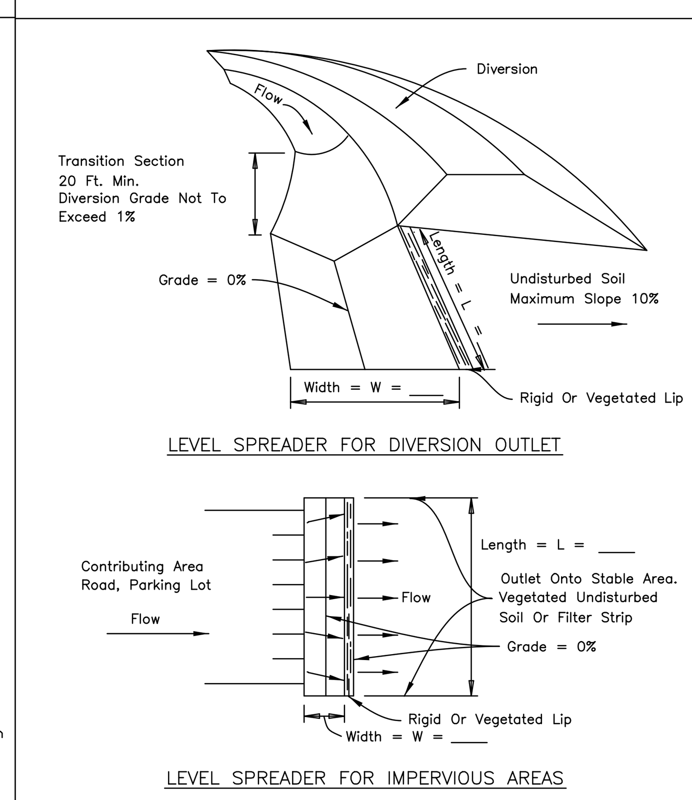

NOTES:
1. Ends of spreader shall be tied into higher ground to prevent flow around the level spreader.
2. See plans for L and W dimensions.

PLAN CODE: (LS)

REFERENCE Project ____ Designed ____ Date ____ Checked ____ Date ____ Approved ____ Date ____ | NRCS Natural Resources Conservation Service | STANDARD DWG. NO. IL-570 SHEET 1 OF 2 DATE 1-29-99

LEVEL SPREADER

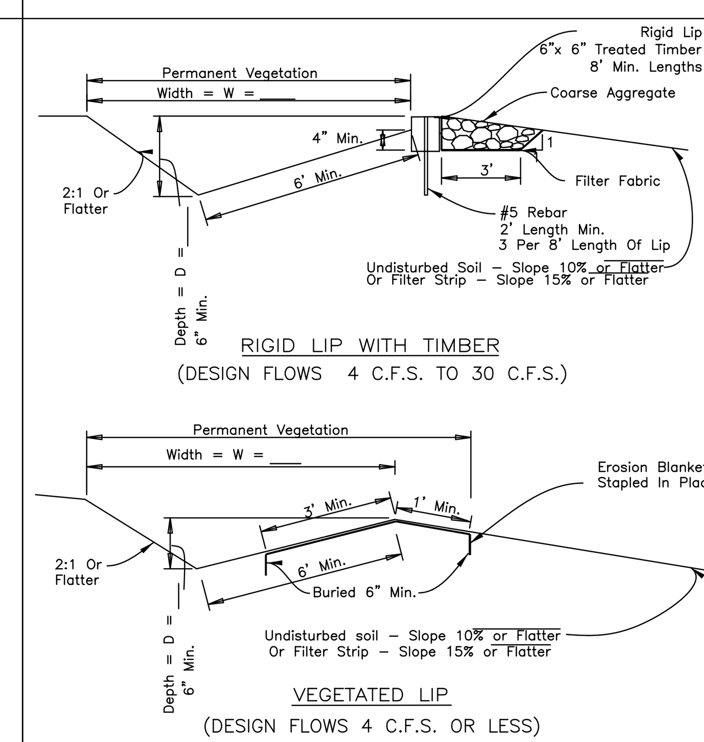

NOTES:
1. Coarse aggregate shall meet one of the following IDOT gradations: CA-1, or CA-3.
2. Filter fabric shall meet the requirements of material specification 592 GEOTEXTILE, Table 1 or 2, Class I, II, or IV.
3. See sheet FILTER STRIP-GRASSED IL-535 for filter strip requirements.
4. See sheet EROSION BLANKET IL-530 for blanket material and installation requirements.
5. See plans for permanent seeding requirements.
6. See plans for D and W dimensions.

PLAN CODE: (LS)

REFERENCE Project ____ Designed ____ Date ____ Checked ____ Date ____ Approved ____ Date ____ | NRCS Natural Resources Conservation Service | STANDARD DWG. NO. IL-570 SHEET 2 OF 2 DATE 1-29-99

RIGHT OF WAY DIVERSION PLAN

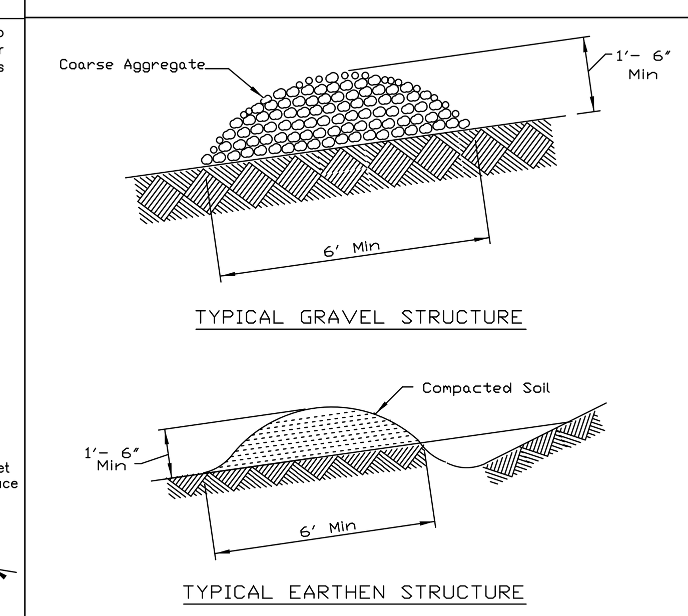

NOTES:
1. Install the diversion as soon as right-of-way has been cleared and graded.
2. Disc the base for the constructed ridge before placing fill.
3. Track the ridge to compact it to the design cross section.
4. Locate the outlet on an undisturbed area. Adjust field spacing of the diversion to use the most stable outlet areas. When natural areas are not deemed satisfactory, provide outlet protection.
5. Immediately seed and mulch the portions of the diversions not subject to construction traffic. Stablize with gravel areas to be crossed by vehicles.
6. Coarse aggregate, if used, shall meet one of the following IDOT gradations: CA-I,CA-2 CA-3, OR CA-4.

PLAN CODE: (RD)

REFERENCE Project ____ Designed ____ Date ____ Checked ____ Date ____ Approved ____ Date ____ | NRCS Natural Resources Conservation Service | STANDARD DWG. NO. IL-600 SHEET 1 OF 1 DATE 3-3-95

PIPE OUTLET TO FLAT AREA

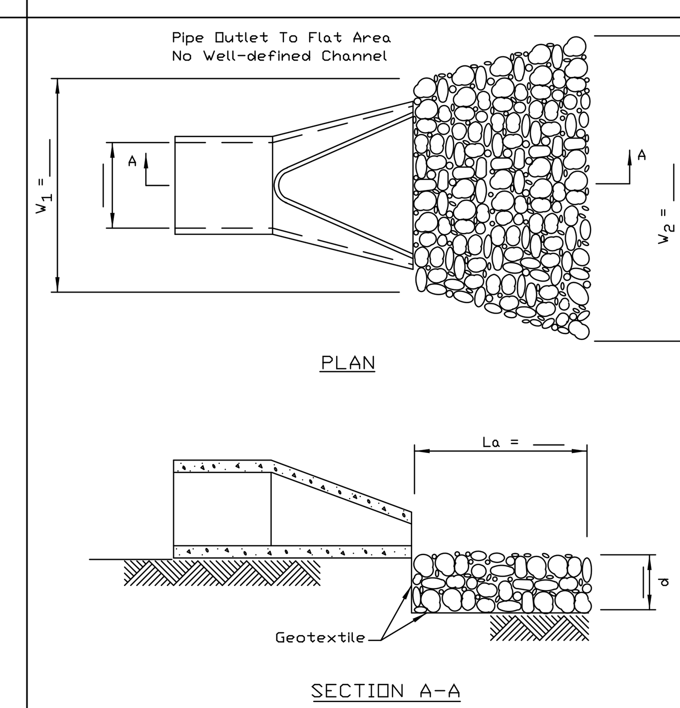

NOTES:
1. The filter fabric shall meet the requirements in material specifications 592 GEOTEXTILE Table 1 or 2, class I, II or III .
2. The rock riprap shall shall meet the IDOT requirements for the following gradation: RR ________ , Quality ________ .
3. The riprap shall be placed according to construction specification 61 LOOSE ROCK RIPRAP. The rock may be equipment placed.

PLAN CODE: (LA)

REFERENCE Project ____ Designed ____ Date ____ Checked ____ Date ____ Approved ____ Date ____ | NRCS Natural Resources Conservation Service | STANDARD DWG. NO. IL-610 SHEET 1 OF 1 DATE 9-15-93

PIPE OUTLET TO CHANNEL

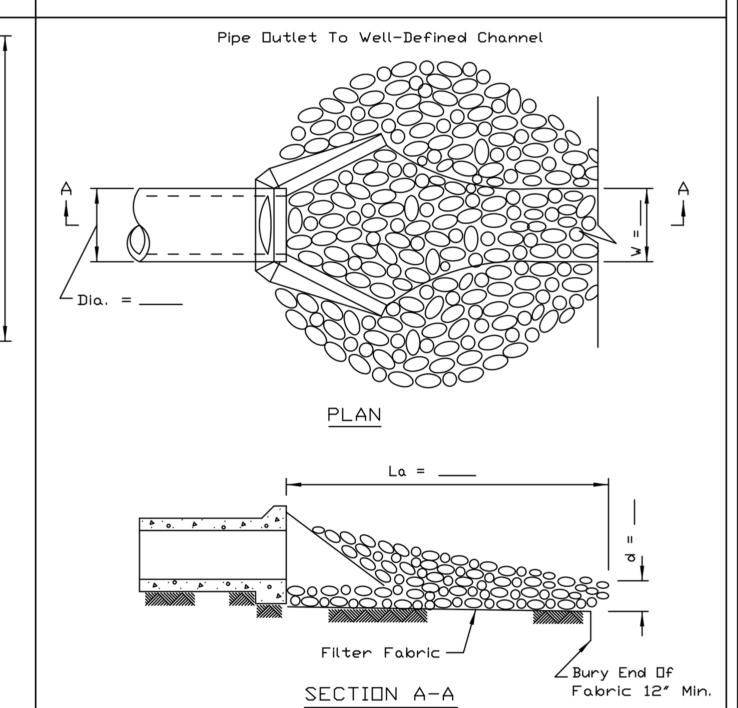

PLAN CODE: (LA)

NOTES:
1. The filter fabric shall meet the requirements in material specification 592 GEOTEXTILE Table 1 or 2, Class I , II or III .
2. The rock riprap shall meet the IDOT requirements for the following gradation ________ .
3. The riprap shall be placed according to construction specification 61 LOOSE ROCK RIPRAP. The rock may be equipment placed.

REFERENCE Project ____ Designed ____ Date ____ Checked ____ Date ____ Approved ____ Date ____ | NRCS Natural Resources Conservation Service | STANDARD DWG. NO. IL-611 SHEET 1 OF 1 DATE 8-18-94

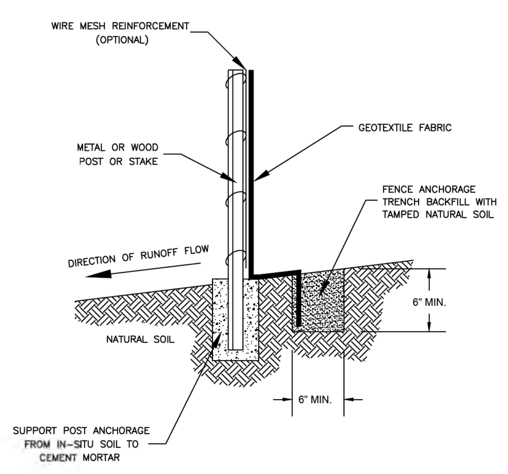

NOTE: DEPENDING UPON CONFIGURATION, ATTACH FABRIC TO WIRE MESH W/HOG RINGS, STEEL POSTS W/TIE WIRES, WOOD POSTS W/NAILS.

VILLAGE OF WHEELING ILLINOIS | VILLAGE OF WHEELING ENGINEERING DIVISION 2 COMMUNITY BOULEVARD WHEELING, IL 60090 WWW.WHEELINGIL.GOV | SILT FENCE INSTALLATION STANDARD | VILLAGE OF WHEELING SPECIFICATIONS AND DETAILS | FILE LOCATION N:\ENGINEERING\STANDARDS\EROSION CONTROL

REVISIONS	
S.W.	05-01-00 AUTOCAD FILE
S.W.	11-07-01 AS PER COMMENT
C.J.C.	01-29-08 AUTOCAD FILE

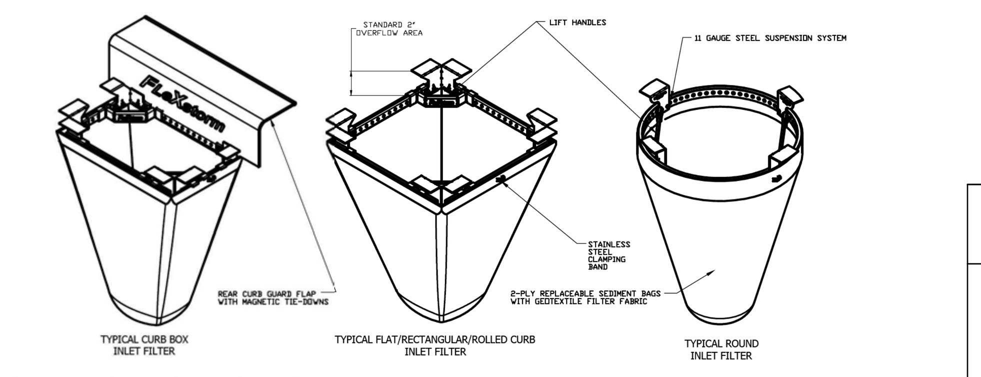

IPP FLeXstorm Inlet Filter Specifications

Material Property	Test Method	Value (min ave)	
> Inner Filter Bag Specs (2 ft³ min vol)		Non-Woven	Woven Mono
Grab Tensile	ASTM D 4632	100 lbs	200 lbs
Puncture Strength	ASTM D 4833	65 lbs	90 lbs
Trapezoidal Tear	ASTM D 4533	45 lbs	75 lbs
UV Resistance	ASTM D 4355	70% at 500 hrs	30%
App Open Size (AOS)	ASTM D 4751	70 sieve (.212 mm)	40 sieve (.425 mm)
Permittivity	ASTM D 4491	2.0/sec	2.1/sec
Water Flow Rate	ASTM D 4491	145 gpm/sqft	145 gpm/sqft
> Polyester Outer Reinforcement Bag Specifications			
Weight	ASTM D 3776	4.55 oz/sqyd +/- 15%	
Thickness	ASTM D 1777	.040 +/- .005	
> Frame Construction			
A36 Structural Steel; 11 Gauge; Zinc Plated	ASTM A 576	Tensile Strength = 58,000 psi Yield Strength = 36,000 psi	

OR VILLAGE OF WHEELING APPROVED EQUAL

DRAWN ANDRIANO | ALL PRODUCTS MANUFACTURED BY INLET & PIPE PROTECTION, INC 1635 TONNE RD ELK GROVE, IL WWW.INLETFILTERS.COM (847) 722-0690 PH (847) 364-5262 FX SALES@INLETFILTERS.COM | SIZE C | DWG NO IPP_FLEXSTORM_SPECS | SHEET 1 OF 1

VILLAGE OF WHEELING ILLINOIS | VILLAGE OF WHEELING ENGINEERING DIVISION 2 COMMUNITY BOULEVARD WHEELING, IL 60090 WWW.WHEELINGIL.GOV | INLET AND FILTER PROTECTION STANDARD | VILLAGE OF WHEELING SPECIFICATIONS AND DETAILS | FILE LOCATION N:\ENGINEERING\STANDARDS\EROSION CONTROL | REVISIONS C.J.C. 01-29-08 NEW FILE

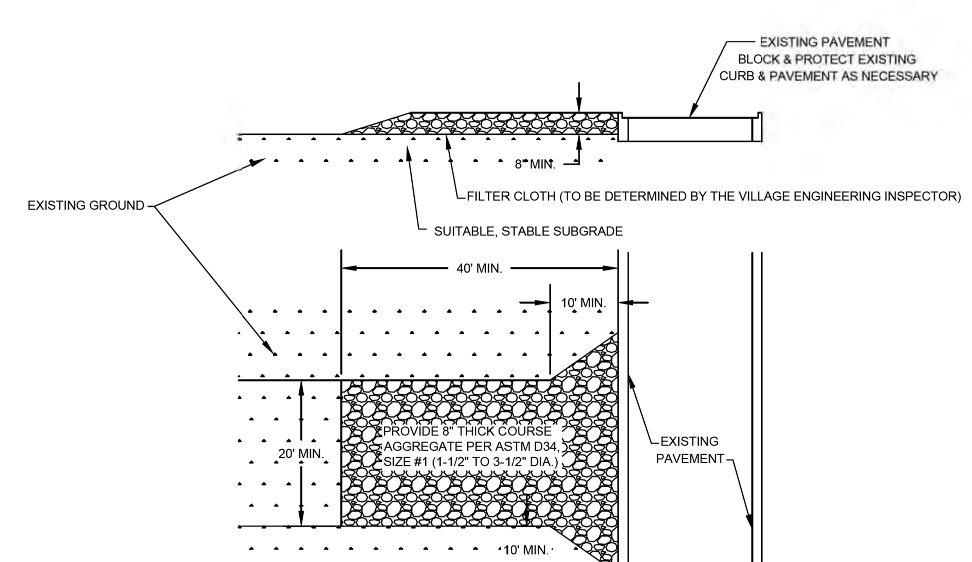

VILLAGE OF WHEELING ILLINOIS | VILLAGE OF WHEELING ENGINEERING DIVISION 2 COMMUNITY BOULEVARD WHEELING, IL 60090 WWW.WHEELINGIL.GOV | TEMPORARY CONSTRUCTION ENTRANCE STANDARD | VILLAGE OF WHEELING SPECIFICATIONS AND DETAILS | FILE LOCATION N:\ENGINEERING\STANDARDS\EROSION CONTROL

REVISIONS	
P.F.	08-16-99
C.J.C.	10-01-08 AUTOCAD FILE

SUMP PIT PLAN

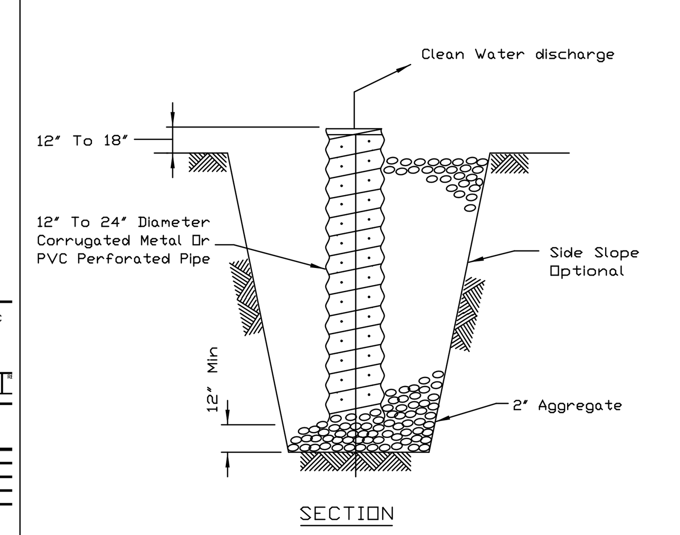

PLAN CODE: (SP)

NOTES:
1. Pit dimensions are optional.
2. The standpipe will be constructed by perforating a 12"-24" diameter corrugated metal or PVC pipe.
3. A base of 2" aggregate will be placed in the pit to a minimum depth of 12". After installing the standpipe, the pit surrounding the standpipe will then be backfilled with 2" aggregate.
4. The standpipe will extend 12" to 18" above the lip of the pit.
5. If discharge will be pumped directly to a storm drainage system, the standpipe will be wrapped with filter fabric before installation.
6. If desired, 1/4"-1/2" hardware cloth may be placed around the standpipe prior to attaching the filter fabric. This will increase the rate of water seepage into the pipe.

REFERENCE Project ____ Designed ____ Date ____ Checked ____ Date ____ Approved ____ Date ____ | NRCS Natural Resources Conservation Service | STANDARD DWG. NO. IL-650 SHEET 1 OF 1 DATE 8-11-94

TEMPORARY SEDIMENT TRAP

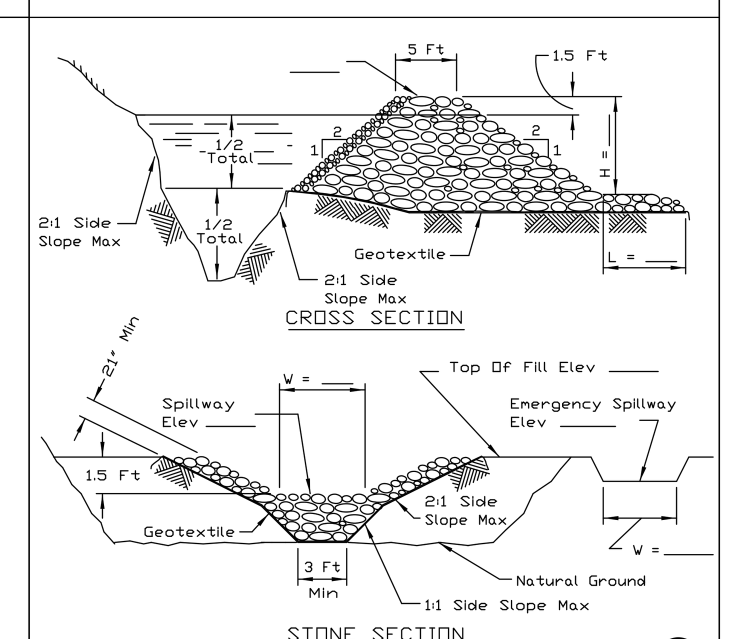

PLAN CODE: (ST)

NOTES:
1. If the sediment pool is formed or enlarged the side slope will be 2:1 or flatter.
2. The fill shall be constructed using IDOT RR-4 stone size. A 1'layer of IDOT CA-2 should be placed on the inside face to reduce the flow rate.
3. The rock will be placed according to construction specification 25 ROCKFILL. Placement will be by Method 1 and compaction will be class III .
4. The geotextile shall meet the requirements in material specification 592 GEOTEXTILE table 1 or 2, class I , II or IV .

REFERENCE Project ____ Designed ____ Date ____ Checked ____ Date ____ Approved ____ Date ____ | NRCS Natural Resources Conservation Service | STANDARD DWG. NO. IL-660 SHEET 1 OF 1 DATE 11-20-01

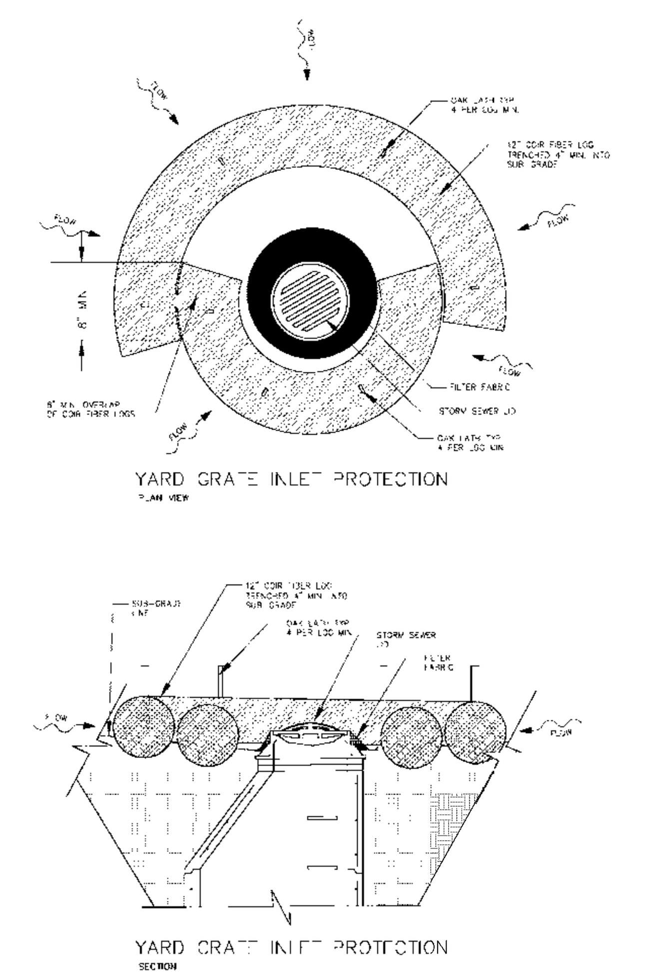

TREE PROTECTION - FENCING

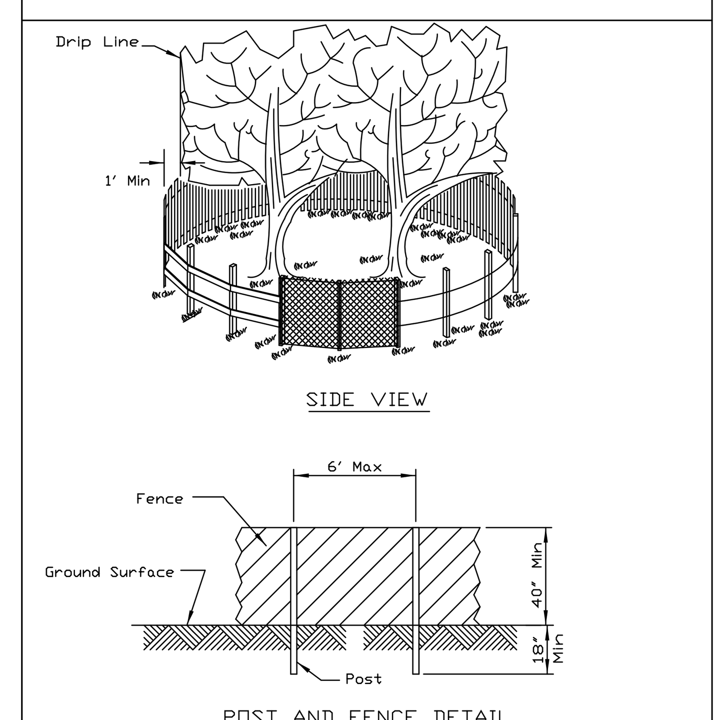

PLAN CODE: TP

NOTES:
1. The fence shall be located a minimum of 1 foot outside the drip line of the tree to be saved and in no case closer than 5 feet to the trunk of any tree.
2. Fence posts shall be either standard steel posts or wood posts with a minumum cross sectional area of 3.0 sq. in.
3. The fence may be either 40" high snow fence, 40" plastic web fencing or any other material as approved by the engineer/inspector.

REFERENCE Project ____ Designed ____ Date ____ Checked ____ Date ____ Approved ____ Date ____ | NRCS Natural Resources Conservation Service | STANDARD DWG. NO. IL-690 SHEET 1 OF 1 DATE 4-7-94

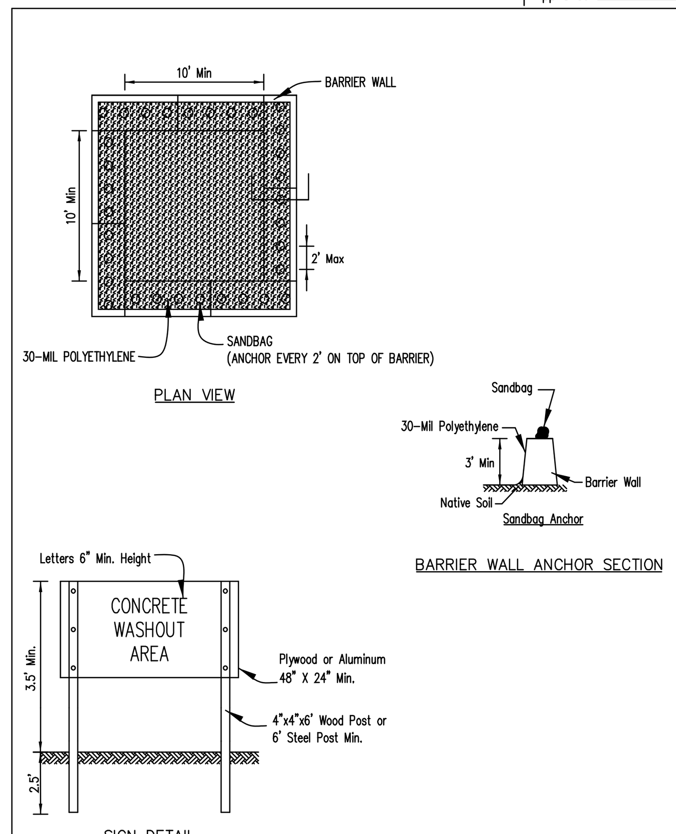

PLAN CODE: (CW)

NOTES:

1. Maintaining temporary concrete washout facilities shall include removing and disposing of hardend concrete and/or slurry and returning the facilities to a functional condition.
2. Facility shall be cleaned or reconstructed in a new area once washout becomes two-thirds full.

TEMPORARY CONCRETE WASHOUT FACILITY – BARRIER WALL | File No. IUM-654BW | Designed ____ Drawn B. JOHNSON 6/08 Checked ____ Approved ____

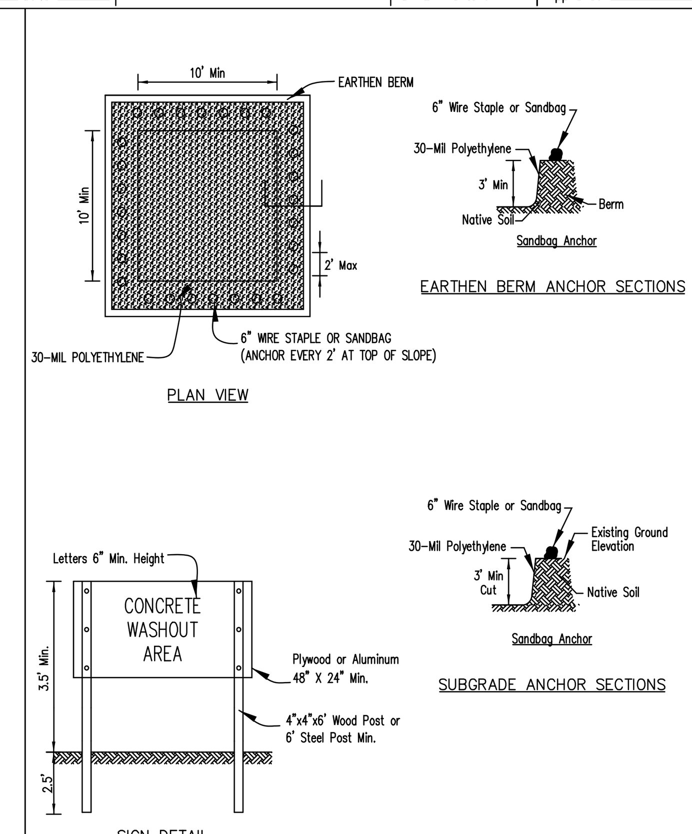

PLAN CODE: (CW)

NOTES:

1. Maintaining temporary concrete washout facilities shall include removing and disposing of hardend concrete and/or slurry and returning the facilities to a functional condition.
2. Facility shall be cleaned or reconstructed in a new area once washout becomes two-thirds full.

TEMPORARY CONCRETE WASHOUT FACILITY – EARTHEN TYPE | File No. IUM-654ET | Designed ____ Drawn B. JOHNSON 6/08 Checked ____ Approved ____

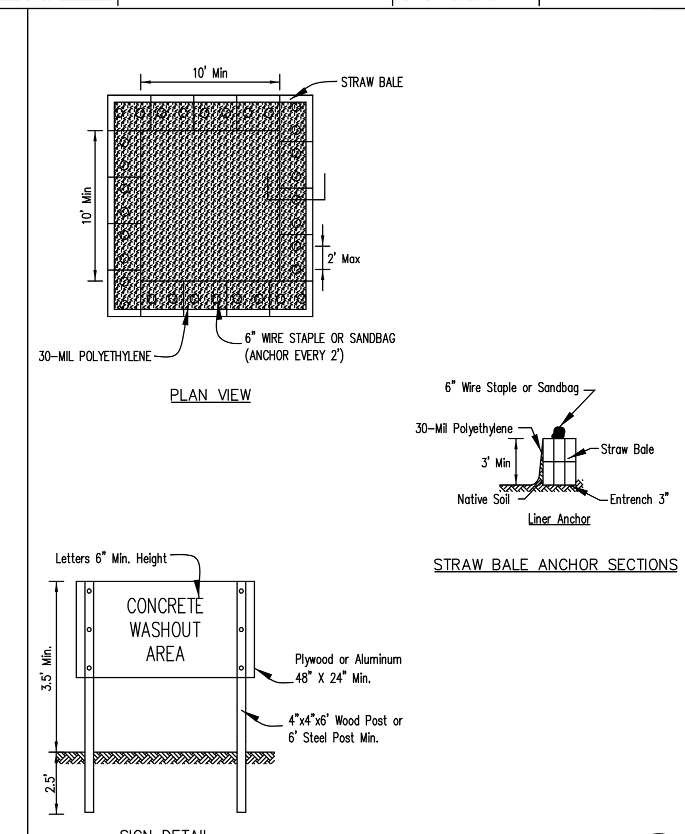

PLAN CODE: (CW)

NOTES:

1. Maintaining temporary concrete washout facilities shall include removing and disposing of hardend concrete and/or slurry and returning the facilities to a functional condition.
2. Facility shall be cleaned or reconstructed in a new area once washout becomes two-thirds full.
3. Each straw bale is to be staked in place using (2) 2"x2"x4' wooden stakes.

TEMPORARY CONCRETE WASHOUT FACILITY – STRAW BALE | File No. IUM-654SB | Designed ____ Drawn B. JOHNSON 6/08 Checked ____ Approved ____

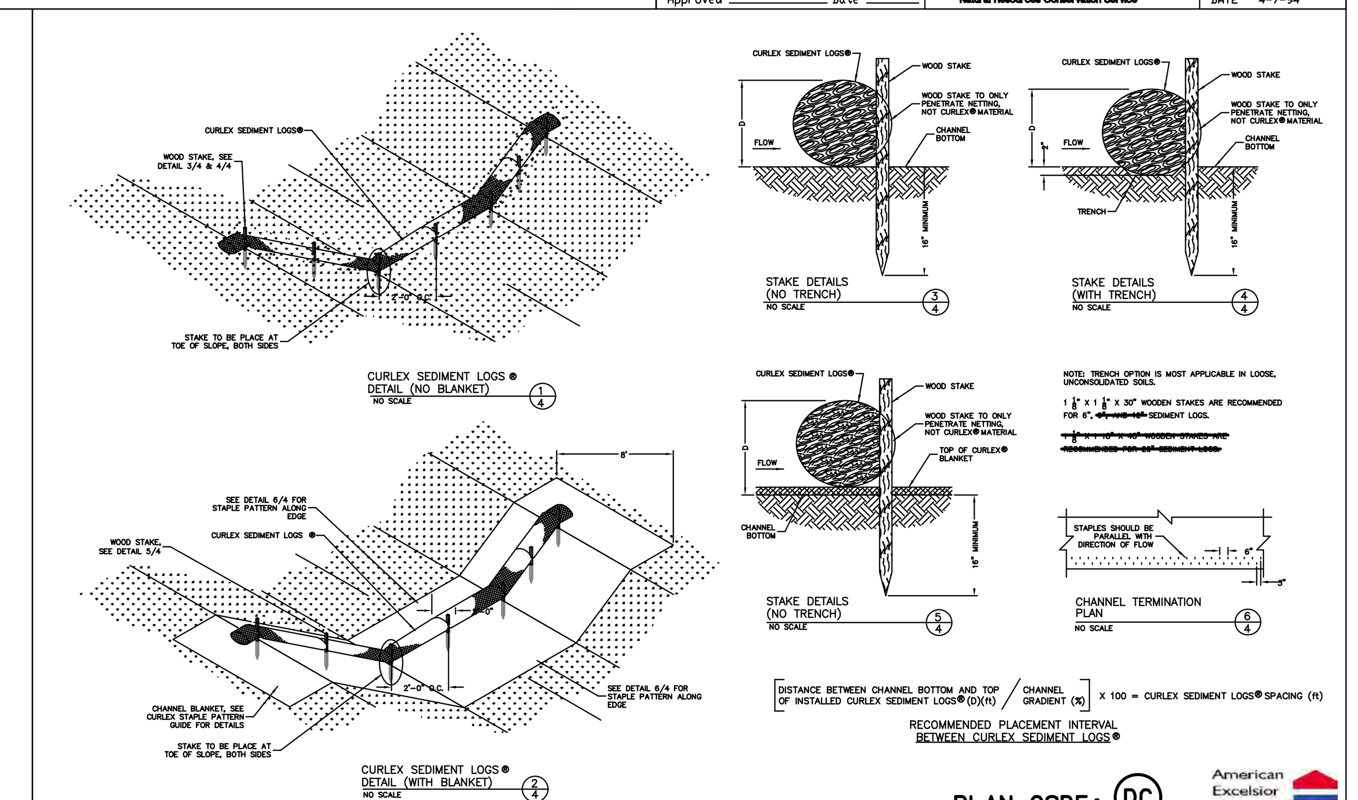

[DISTANCE BETWEEN CHANNEL BOTTOM AND TOP OF INSTALLED CURLEX SEDIMENT LOGS® (D)(ft) / CHANNEL GRADIENT (%)] X 100 = CURLEX SEDIMENT LOGS® SPACING (ft)

RECOMMENDED PLACEMENT INTERVAL BETWEEN CURLEX SEDIMENT LOGS®

PLAN CODE: (DC)

American Excelsior Company® Earth Science Division

AMERICAN EXCELSIOR COMPANY ARLINGTON, TEXAS | SHEET DESCRIPTION CURLEX SEDIMENT LOGS® DITCH/CHANNEL APPLICATION DETAIL

NO.	DATE	REMARKS

NO.	DATE	REMARKS

SOIL EROSION AND SEDIMENT CONTROL PLAN - 2

800 NORTHGATE PARKWAY
WHEELING, ILLINOIS

CONSULTING ENGINEERS
SITE DEVELOPMENT ENGINEERS
LAND SURVEYORS
9575 W. Higgins Road, Suite 700, Rosemont, Illinois 60018
Phone: (847) 696-4060 Fax: (847) 696-4065
SPACECO INC.

FILENAME: 1642_04_SE02

DATE: 09/16/2016

JOB NO. 1642.04

SHEET SE2 12 OF 22

NOTES:

1. CONTRACTOR SHALL COORDINATE FINAL STABLIZATION WITH LANDSCAPE ARCHITECT PLANS.
2. CONTRACTOR SHALL FIELD DETERMINE LOCATION OF CONCRETE WASHOUT.
3. NORTH AMERICAN GREEN S-75 EROSION CONTROL BLANKET SHALL BE INSTALLED IN ALL AREA WHERE SLOPE IS GREATER THAN 6:1. NORTH AMERICAN GREEN C-350 EROSION CONTROL BLANKET SHALL BE INSTALLED WHERE INDICATED ON PLAN.
4. YARD SHALL BE FINISHED WITH 6" TOPSOIL AND SEED. STORMWATER BASINS TO BE FINISHED WITH 12" TOPSOIL AND SEED.

N

SCALE 1" = 40'

0 40 80

SYMBOL LEGEND

- SE — STABILIZED CONSTRUCTION ENTRANCE
- NORTH AMERICAN GREEN S-75 CONTROL BLANKET
- NORTH AMERICAN GREEN C-350 CONTROL BLANKET
- SILT FENCE
- FF — INLET FILTER BASKET
- P — ASPHALT OR CONCRETE PAVEMENT
- PS — PERMANENT SEEDING
- LA — LINED APRON
- CW — CONCRETE WASHOUT
- NP — NATIVE PLANTINGS (SEE LANDSCAPE PLANS)

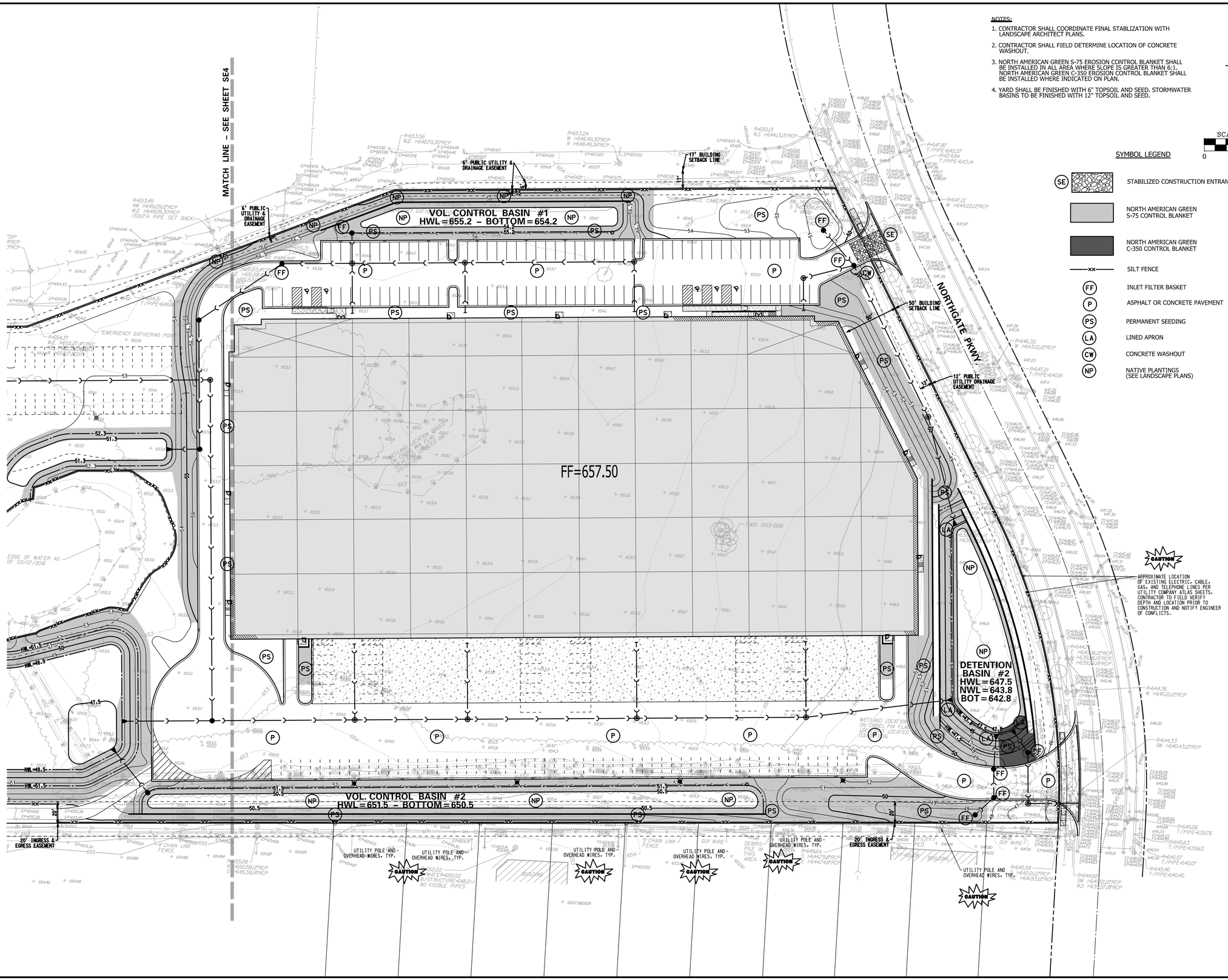

NO.	DATE	REMARKS

NO.	DATE	REMARKS

SOIL EROSION AND SEDIMENT CONTROL PLAN - 3

800 NORTHGATE PARKWAY

WHEELING, ILLINOIS

CONSULTING ENGINEERS
SITE DEVELOPMENT ENGINEERS
LAND SURVEYORS

9575 W. Higgins Road, Suite 700,
Rosemont, Illinois 60018
Phone: (847) 696-4060 Fax: (847) 696-4065

SPACECO INC.

FILENAME: 1642_04_SE03

DATE: 09/16/2016

JOB NO. 1642.04

SHEET SE3

N:\DGN\1642\1642.04-hamilton.partners\ENG\1642_04_SE03.dgn Default User=randerson

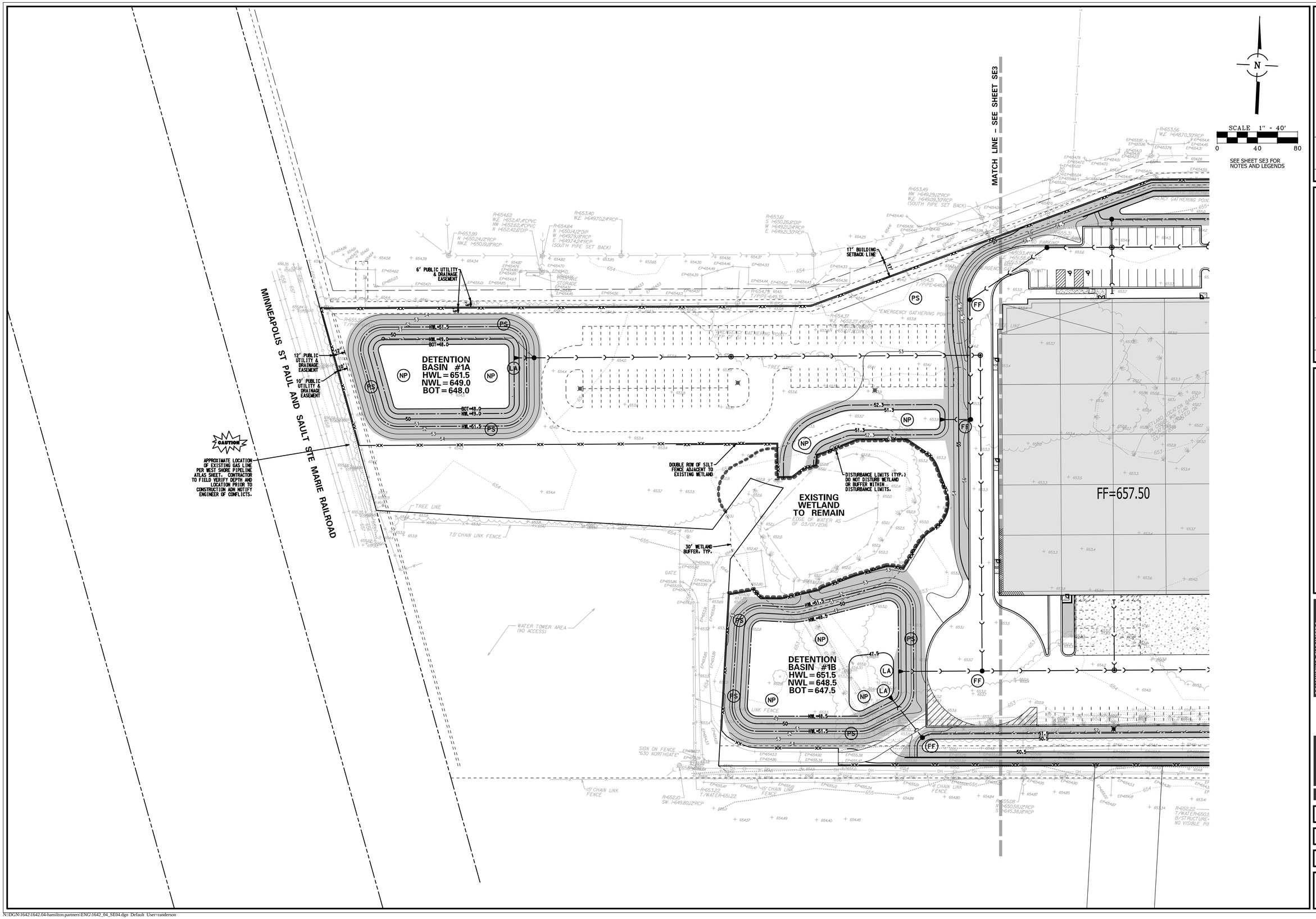

NO.	DATE	REMARKS

NO.	DATE	REMARKS

SOIL EROSION AND SEDIMENT CONTROL PLAN - 4

800 NORTHGATE PARKWAY
WHEELING, ILLINOIS

CONSULTING ENGINEERS
SITE DEVELOPMENT ENGINEERS
LAND SURVEYORS
9575 W. Higgins Road, Suite 700,
Rosemont, Illinois 60018
Phone: (847) 696-4060 Fax: (847) 696-4065
SPACECO INC.

FILENAME: 1642_04_SE04

DATE: 09/16/2016

JOB NO. 1642.04

SHEET **SE4**
14 OF 22

N:\DGN\1642\1642.04-hamilton.partners\ENG\1642_04_SE04.dgn Default User=randerson

EARTHWORK NOTES

1. GENERAL

A. IT IS THE CONTRACTOR'S RESPONSIBILITY TO UNDERSTAND THE SOIL AND GROUNDWATER CONDITIONS AT THE SITE. THE CONTRACTOR SHALL OBTAIN AND READ THE GEOTECHNICAL REPORTS AVAILABLE FROM THE OWNER.

B. ANY QUANTITIES IN THE BID PROPOSAL ARE INTENDED AS A GUIDE FOR THE CONTRACTOR'S USE IN DETERMINING THE SCOPE OF THE COMPLETED PROJECT. IT IS THE CONTRACTOR'S RESPONSIBILITY TO DETERMINE ALL MATERIAL QUANTITIES AND APPRAISE HIMSELF OF ALL SITE CONDITIONS. THE CONTRACT PRICE SUBMITTED BY THE CONTRACTOR SHALL BE CONSIDERED AS LUMP SUM FOR THE COMPLETE PROJECT. NO CLAIMS FOR EXTRA WORK WILL BE RECOGNIZED UNLESS ORDERED IN WRITING BY THE OWNER.

C. THE CONTRACTOR WILL NOTE THAT THE ELEVATIONS SHOWN ON THE CONSTRUCTION PLANS ARE FINISHED GRADE ELEVATIONS AND THAT PAVEMENT THICKNESS, TOPSOIL, ETC. MUST BE SUBTRACTED TO DETERMINE SUBGRADE ELEVATIONS.

D. THE CONTRACTOR SHALL MAINTAIN POSITIVE DRAINAGE DURING CONSTRUCTION, AND PREVENT STORMWATER FROM RUNNING INTO OR STANDING IN EXCAVATED AREAS. THE FAILURE TO PROVIDE PROPER DRAINAGE WILL NEGATE ANY POSSIBLE ADDED COMPENSATION REQUESTED DUE TO DELAYS OR UNSUITABLE MATERIALS CREATED AS A RESULT THEREOF. FINAL GRADES SHALL BE PROTECTED AGAINST DAMAGE FROM EROSION, SEDIMENTATION AND TRAFFIC.

E. PLANS FOR THE SITE DEWATERING, IF EMPLOYED, SHALL BE SUBMITTED TO AND APPROVED BY THE OWNER PRIOR TO IMPLEMENTATION. NO ADDITIONAL COMPENSATION SHALL BE MADE FOR DEWATERING DURING CONSTRUCTION.

F. THE CONTRACTOR SHALL BE RESPONSIBLE FOR IMPLEMENTATION OF THE "SOIL EROSION AND SEDIMENTATION CONTROL MEASURES". THE INITIAL ESTABLISHMENT OF EROSION CONTROL PROCEDURES AND THE PLACEMENT OF SILT AND FILTER FENCING, ETC. TO PROTECT ADJACENT PROPERTY, WETLANDS, ETC. SHALL OCCUR BEFORE GRADING BEGINS. A MUNICIPAL EROSION CONTROL INSPECTION MAY BE REQUIRED BEFORE ANY EARTHWORK IS PERFORMED.

G. PRIOR TO COMMENCEMENT OF GRADING ACTIVITIES, THE CONTRACTOR SHALL ERECT A "SNOW FENCE" AROUND ANY TREE DESIGNATED TO BE PRESERVED. SAID FENCE SHALL BE PLACED IN A CIRCLE CENTERED AROUND THE TREE, THE DIAMETER OF WHICH SHALL BE SUCH THAT THE ENTIRE DRIP ZONE (EXTENT OF FURTHEST EXTENDING BRANCHES) SHALL BE WITHIN THE FENCE LIMITS. THE EXISTING GRADE WITHIN THE FENCED AREA SHALL NOT BE DISTURBED.

H. EXCESS MATERIALS, IF NOT UTILIZED AS FILL, SHALL BE COMPLETELY REMOVED FROM THE CONSTRUCTION SITE AND DISPOSED OF OFF-SITE BY THE CONTRACTOR.

I. ALL EARTHWORK SHALL BE DONE UNDER THE SUPERVISION OF AN ILLINOIS LICENSED ENGINEER WHO SPECIALIZES IN THE GEOTECHNICAL FIELD (SOILS ENGINEER). THIS ENGINEER WILL BE RESPONSIBLE FOR ENSURING THAT ALL UNSUITABLE MATERIALS ARE REMOVED, ALL STRUCTURAL FILL MATERIALS ARE PROPERLY PLACED AND COMPACTED, ALL PAVEMENT SUBGRADES ARE PROPERLY PREPARED, PROOF ROLLING SUBGRADES AND BASE COURSES, AND ENSURING THAT ALL WATER RETAINING EMBANKMENTS ARE PROPERLY CONSTRUCTED. THE DEVELOPER PAYS FOR ALL GEOTECHNICAL SERVICES.

2. TOPSOIL EXCAVATION INCLUDES:

A. EXCAVATION OF TOPSOIL AND OTHER STRUCTURALLY UNSUITABLE MATERIALS WITHIN THOSE AREAS THAT WILL REQUIRE EARTH EXCAVATION OR COMPACTED EARTH FILL MATERIAL. EXISTING VEGETATION SHALL BE REMOVED PRIOR TO STRIPPING TOPSOIL OR FILLING AREAS.

B. PLACEMENT OF THE EXCAVATED MATERIAL IN OWNER DESIGNATED AREAS FOR FUTURE USE WITHIN AREAS TO BE LANDSCAPED, AND THOSE AREAS NOT REQUIRING STRUCTURAL FILL MATERIAL. PROVIDE NECESSARY EROSION CONTROL MEASURES FOR STOCKPILE.

C. TOPSOIL STOCKPILED FOR RESPREAD SHALL BE FREE OF CLAY AND SHALL NOT CONTAIN ANY OF THE TRANSITIONAL MATERIAL BETWEEN THE TOPSOIL AND CLAY. THE TRANSITIONAL MATERIAL SHALL BE USED IN NON-STRUCTURAL FILL AREAS OR DISPOSED OF OFF-SITE.

D. TOPSOIL RESPREAD SHALL INCLUDE HAULING AND SPEADING 6" OF TOPSOIL OVER AREAS TO BE LANDSCAPED WHERE SHOWN ON THE PLANS OR DIRECTED BY THE OWNER.

E. MODERATE COMPACTION IS REQUIRED IN NON-STRUCTURAL FILL AREAS.

3. EARTH EXCAVATION INCLUDES:

A. EXCAVATION OF CLAY AND OTHER MATERIALS WHICH ARE SUITABLE FOR USE AS STRUCTURAL FILL. THE EXCAVATION SHALL BE TO WITHIN A TOLERANCE OF 0.1 FEET OF THE PLAN SUBGRADE ELEVATIONS WHILE MAINTAINING PROPER DRAINAGE. THE TOLERANCE WITHIN PAVEMENT AREAS SHALL BE SUCH THAT THE EARTH MATERIALS SHALL "BALANCE" DURING THE FINE GRADING OPERATION.

B. PLACEMENT OF THE CLAY AND OTHER SUITABLE MATERIALS SHALL BE WITHIN THOSE AREAS REQUIRING STRUCTURAL FILL IN ORDER TO ACHIEVE THE PLAN SUBGRADE ELEVATIONS TO WITHIN A TOLERANCE OF 0.1 FEET. THE FILL MATERIAL SHALL BE PLACED IN LOOSE LIFTS THAT SHALL NOT EXCEED EIGHT (8) INCHES IN THICKNESS, AND THE WATER CONTENT SHALL BE ADJUSTED IN ORDER TO ACHIEVE REQUIRED COMPACTION.

STRUCTURAL FILL MATERIAL MAY BE PLACED WITHIN THOSE PORTIONS OF THE SITE NOT REQUIRING STRUCTURAL FILL, TO WITHIN SIX (6) INCHES OF THE PLAN FINISHED GRADE ELEVATION. IN AREAS REQUIRING STRUCTURAL FILL, HOWEVER, THIS MATERIAL SHALL NOT BE PLACED OVER TOPSOIL OR OTHER UNSUITABLE MATERIALS UNLESS SPECIFICALLY DIRECTED BY A SOILS ENGINEER WITH THE CONCURRENCE OF THE OWNER.

C. COMPACTION OF THE CLAY AND OTHER SUITABLE MATERIALS, SHALL BE TO AT LEAST 93% OF THE MODIFIED PROCTOR DRY DENSITY WITHIN PROPOSED PAVEMENT AREAS, SIDEWALK, ETC. COMPACTION SHALL BE AT LEAST 95% OF THE MODIFIED PROCTOR WITHIN PROPOSED BUILDING PAD AREAS.

D. EXCAVATION: QUANTITIES OF EARTH EXCAVATION INDICATED ELSEWHERE IN THIS CONTRACT HAVE BEEN COMPUTED BY THE END AREA METHOD AS PROVIDED FOR IN SECTION 202 OF THE STANDARD SPECIFICATIONS. EXCAVATED MATERIALS NOT NEEDED FOR THIS JOB SITE SHALL BE LEGALLY DISPOSED OF. PAYMENT SHALL BE MADE AT THE CONTRACT UNIT PRICE PER CUBIC YARD OF EARTH EXCAVATION.

4. UNSUITABLE MATERIAL

UNSUITABLE MATERIAL SHALL BE CONSIDERED AS MATERIAL WHICH IS NOT SUITABLE FOR THE SUPPORT OF PAVEMENT AND BUILDING CONSTRUCTION, AND IS ENCOUNTERED BELOW NORMAL TOPSOIL DEPTHS AND THE PROPOSED SUBGRADE ELEVATION. THE DECISION TO REMOVE SAID MATERIAL, AND TO WHAT EXTENT, SHALL BE MADE BY A SOILS ENGINEER WITH THE CONCURRENCE OF THE OWNER.

5. MISCELLANEOUS THE CONTRACTOR SHALL:

A. SPREAD AND COMPACT UNIFORMLY TO THE DEGREE SPECIFIED ALL EXCESS TRENCH SPOIL AFTER COMPLETION OF THE UNDERGROUND IMPROVEMENTS.

B. SCARIFY, DISC, AERATE, AND COMPACT, TO THE DEGREE SPECIFIED, THE UPPER TWELVE (12) INCHES OF THE SUITABLE SUBGRADE MATERIAL, IN ALL AREAS THAT MAY BE SOFT DUE TO EXCESS MOISTURE CONTENT. THIS APPLIES TO CUT AREAS AS WELL AS FILL AREAS.

C. PROVIDE WATER TO ADD TO DRY MATERIAL IN ORDER TO ADJUST THE MOISTURE CONTENT FOR THE PURPOSE OF ACHIEVING THE SPECIFIED COMPACTION.

D. BACKFILL THE CURB AND GUTTER AFTER ITS CONSTRUCTION AND PRIOR TO THE PLACEMENT OF THE BASE COURSE MATERIAL. THE CURBS SHALL NOT BE BACKFILLED UNTIL THE CONCRETE HAS CURED FOR AT LEAST 7 DAYS.

E. TRENCH COMPACTION: ALL TRENCHES SHALL BE COMPACTED BY MECHANICAL TECHNIQUES APPROVED BY THE SOILS ENGINEER UNTIL PROPER COMPACTION IS ACHIEVED. THE REQUIREMENT FOR MECHANICAL COMPACTION MAY BE WAIVED IF, IN THE OPINION OF THE SOILS ENGINEER AND THE MUNICIPAL ENGINEER, THE BACKFILLED TRENCHES MEET THE DENSITY REQUIREMENTS. JETTING OF TRENCHES FOR COMPACTION WILL NOT BE ALLOWED.

6. TESTING AND FINAL ACCEPTANCE

A. THE CONTRACTOR SHALL PROVIDE AS A MINIMUM, A FULLY LOADED SIX-WHEEL TANDEM AXLE TRUCK FOR PROOF ROLLING THE PAVEMENT SUBGRADE PRIOR TO THE PLACEMENT OF THE CURB AND GUTTER AND THE BASE MATERIAL. THIS SHALL BE WITNESSED BY MUNICIPAL ENGINEER AND THE OWNER. SEE PAVING SPECIFICATION.

B. ANY UNSUITABLE AREA ENCOUNTERED AS A RESULT OF PROOF ROLLING SHALL BE REMOVED AND REPLACED WITH SUITABLE MATERIAL, OR OTHERWISE CORRECTED, APPROVED BY THE SOILS CONSULTANT.

C. ANY TESTING THAT IS REQUIRED OF THIS CONSTRUCTION IS CONSIDERED INCIDENTAL TO THE COST OF CONSTRUCTION. NO SEPARATE PAYMENT WILL BE MADE.

VILLAGE OF WHEELING EARTHWORK NOTES

EARTHWORK / EROSION & SEDIMENTATION CONTROL

1) All construction activities that involves earthwork shall meet the National Pollutant Discharge Elimination System Phase II requirements:
   a) Submittal of a Notice of Intent (NOI) to Illinois Environmental Protection Agency (IEPA).
   b) Possession of a completed and signed Stormwater Pollution Prevention Plan (SWPPP) and a graphic Erosion and Sediment Control (ESC) plan.
   c) Implementation of the SWPPP.
   d) Submittal of an Incidence of Noncompliance (ION) if an event occurs.
   e) Weekly reports after ½" rainfall or 5" snowfall.
   f) Documentation of changes to ESC plan.
   g) Submittal of a Notice of Termination (NOT) when final stabilization is achieved.
2) The Contractor shall install all erosion control items prior to commencement of any work.
3) Any wetland mitigation shall begin prior to any grading work and shall be in accordance with the approved mitigation permit plan and requirements.
4) In order to protect and ensure against flooding, all top of foundations shall be set a minimum of one (1) foot above the high water level of adjacent stormwater management facilities such as retention/detention ponds.
5) The Contractor shall maintain existing positive drainage from off-site at all times during construction.
6) Within the limits of proposed grading the soil shall be compacted to not less than the following percentages of modified proctor dry density in accordance with ASTM D 1557-78:
   a) Under structures. Building slabs, steps and pavements. Compact six (6) inch maximum lifts of sub-grade. Backfill or fill material at 95% modified proctor dry density.
   b) Under walkways. Compact six (6) inch maximum lifts of dry sub-grade, backfill, or fill material at 95% modified proctor dry density.
   c) Under lawn or unpaved areas. Compact six (6) inch maximum lifts of sub-grade, backfill, or fill material at 85% modified proctor dry density.
7) All erosion control work shall comply with "Illinois Procedures and Standards for Urban Soil Erosion and Sedimentation Control."
8) Stripping of vegetation, grading or other soil disturbance, especially in designated wetland areas, shall be done in a manner which will minimize soil erosion, and shall be in accordance with the approved drawings, mitigation and permit requirements.
9) The contractor shall take precautionary measures to minimize earthwork in areas where trees are to be saved as shown on the plans or determined in the field.
10) The extent of the area which is exposed and free of vegetation and the duration of its exposure shall be kept within practical limits as directed by the Village of Wheeling.
11) Sedimentation shall be retained on site. Straw bales and sediment fence shall be installed along the perimeter of all re-graded areas or as required to prevent sediment from entering and/or leaving the site.
12) Straw bales for construction of erosion control devices shall be new, firm and wire or nylon bound livestock feed grade. Each bale shall be embedded in the soil a minimum of four inches. Bales shall be securely anchored in place by stakes or rebars driven through the bales.
13) Dust produced from the site shall be kept to a minimum during dry periods by spraying water as required to the Village of Wheeling Engineering Inspector's satisfaction and is to be considered incidental.
14) All mud shall be removed from all tires before leaving the site and the roads shall be kept clean and clear of mud and debris at all times.
15) Culverts and drainage ditches shall be kept clean and clear of obstructions during the construction period.
16) Straw bales and silt fences shall be inspected frequently and maintained or replaced as required to maintain both their effectiveness and integrity. The underside of bales shall be kept in close contact with the earth below at all times to prevent water from washing beneath them.
17) Water courses and drainage swales adjacent to construction activities shall be monitored as necessary, for evidence of silt intrusion and other adverse environmental impacts. Any problems or deficiencies shall be corrected immediately upon their discovery.
18) Sod all unpaved areas of parkways, right-of-ways and front yards to rear wall of the building. Seeding may be used in other areas, particularly back yards, only with prior approval from the Village of Wheeling.
19) The Contractor shall install temporary orange fence around all trees to remain as well as wetland areas that are to be mitigated.

SIGNING AND PAVEMENT MARKING

1. ALL SIGNING AND PAVEMENT MARKING SHALL BE IN ACCORDANCE WITH THE ILLINOIS MANUAL ON UNIFORM TRAFFIC CONTROL DEVICES (MUTCD), THE STANDARD SPECIFICATIONS FOR ROAD AND BRIDGE CONSTRUCTION (SSRBC), MUNICIPAL CODE AND THESE PLANS.

2. CONTRACTOR SHALL ESTABLISH LOCATION OF ALL SIGNS AND MARKINGS FOR APPROVAL BY THE OWNER PRIOR TO INSTALLATION.

3. SIGNS: SIGNS SHALL BE CONSTRUCTED OF 0.080 INCH THICK FLAT ALUMINUM PANELS WITH REFLECTORIZED LEGEND ON THE FACE IN ACCORDANCE WITH (SSRBC) SECTION 720. LEGEND SHALL BE IN ACCORDANCE WITH MUTCD AND AS SHOWN ON THE PLANS.

4. POSTS: SIGN POSTS SHALL BE A HEAVY DUTY STEEL "U" SHAPED CHANNEL WEIGHING 3.0 POUNDS/FOOT SUCH AS A TYPE B METAL POST PER (SSRBC) SECTION 729 [OR: 2" PERFORATED STEEL TUBE PER (SSRBC) SECTION 728].

5. SIGNS AND POSTS SHALL BE INSTALLED IN ACCORDANCE WITH THE ABOVE (SSRBC) SECTIONS AND IDOT STANDARD 729001 EXCEPT AS MODIFIED BY THE PLANS.

6. PAVEMENT MARKINGS: ALL PAVEMENT MARKINGS IN THE ROADWAY LIMITS, SUCH AS STOP LINES, CENTERLINES, CROSSWALKS AND DIRECTIONAL ARROWS SHALL BE REFLECTORIZED THERMOPLASTIC PER (SSRBC) SECTION 780, EXCEPT AS MODIFIED BY THE PLANS. [NOTE TO ENGINEER: IDOT PREFERS REFLECTORIZED PAINT ON CONCRETE PAVEMENT - CHECK WITH AGENCY WHO WILL MAINTAIN ROAD.]

7. PAVEMENT MARKINGS ON BIKE PATHS, PARKING LOT STALLS, AND SIMILAR "LOW WEAR" APPLICATION, SHALL BE PAINT IN ACCORDANCE TO (SSRBC) SECTION 780, EXCEPT AS MODIFIED BY THE PLANS. REFLECTIVE BEADS ARE NOT REQUIRED.

8. COLOR, WIDTH, STYLE, AND SIZE OF ALL MARKINGS SHALL BE IN ACCORDANCE WITH (MUTCD) EXCEPT AS MODIFIED BY THE PLANS.

9. THERMOPLASTIC MARKINGS SHALL BE INSTALLED WHEN THE PAVEMENT TEMPERATURE IS 55° F AND RISING. PAINT MARKINGS MAY BE INSTALLED WHEN THE AIR TEMPERATURE IS 50° F AND RISING.

PAVING NOTES

1. GENERAL

A. PAVING WORK INCLUDES FINAL SUBGRADE SHAPING, PREPARATION AND COMPACTION; PLACEMENT OF SUB-BASE OR BASE COURSE MATERIALS; BITUMINOUS BINDER AND/OR SURFACE COURSES; FORMING, FINISHING AND CURING CONCRETE PAVEMENT, CURBS AND WALKS; AND FINAL CLEAN-UP AND ALL RELATED WORK.

B. COMPACTION REQUIREMENTS: [REFERENCE ASTM D-1557 (MODIFIED PROCTOR)] SUB-GRADE = 93%; SUB-BASE = 93%; AGGREGATE BASE COURSE = 95%; BITUMINOUS COURSES = REFER TO SSRBC ARTICLE 406.07. THE SOILS ENGINEER IS RESPONSIBLE FOR ENSURING THAT MATERIALS ARE PROPERLY PLACED AND COMPACTED.

C. IT SHALL BE THE CONTRACTOR'S SOLE RESPONSIBILITY TO PROVIDE PROPER BARRICADING, WARNING DEVICES AND THE SAFE MANAGEMENT OF TRAFFIC WITHIN THE AREA OF CONSTRUCTION. ALL SUCH DEVICES AND THEIR INSTALLATION SHALL CONFORM TO THE ILLINOIS MANUAL OF UNIFORM TRAFFIC CONTROL DEVICES, LATEST EDITION AND IN ACCORDANCE WITH THE MUNICIPAL CODE.

2. SUB-GRADE PREPARATION

A. EARTHWORK FOR PROPOSED PAVEMENT SUBGRADE SHALL BE FINISHED TO WITHIN 0.1 FOOT, PLUS OR MINUS, OF PLAN ELEVATION. THE CONTRACTOR SHALL SATISFY HIMSELF THAT THE SUBGRADE HAS BEEN PROPERLY PREPARED AND THAT THE FINISH TOP SUBGRADE ELEVATION HAS BEEN GRADED WITHIN TOLERANCES ALLOWED IN THESE SPECIFICATIONS. UNLESS THE CONTRACTOR ADVISES THE OWNER AND ENGINEER IN WRITING PRIOR TO FINE GRADING FOR BASE COURSE CONSTRUCTION, IT IS UNDERSTOOD THAT HE HAS APPROVED AND ACCEPTS THE RESPONSIBILITY FOR THE SUBGRADE.

B. PRIOR TO THE PLACEMENT OF THE BASE COURSE, THE SUBGRADE MUST BE PROOF ROLLED AND INSPECTED FOR UNSUITABLE MATERIALS AND/OR EXCESSIVE MOVEMENT. THE SOILS ENGINEER SHALL CONDUCT AND THE VILLAGE SHALL WITNESS ALL PROOF ROLLS. IF UNSUITABLE SUBGRADE IS ENCOUNTERED, IT SHALL BE CORRECTED IN A MANNER APPROVED BY THE OWNER OR HIS REPRESENTATIVE. THIS MAY INCLUDE ONE OR MORE OF THE FOLLOWING METHODS:
1) SCARIFY DISC AND AERATE.
2) REMOVE AND REPLACE WITH STRUCTURAL CLAY FILL.
3) REMOVE AND REPLACE WITH GRANULAR MATERIAL.
4) USE OF GEOTEXTILE FABRIC.

MAXIMUM DEFLECTION ALLOWED IN ISOLATED AREAS MAY BE 1/4" TO 1/2" IF NO DEFLECTION OCCURS OVER THE MAJORITY OF THE AREA.

C. PRIOR TO THE CONSTRUCTION OF THE CURB AND GUTTER AND THE PLACEMENT OF THE BASE MATERIAL, THE PAVEMENT AREA SHALL BE FINE GRADED TO WITHIN 0.04 FEET (1/2") OF FINAL SUBGRADE ELEVATION, TO A POINT TWO (2) FEET BEYOND THE BACK OF CURB, SO AS TO INSURE THE PROPER THICKNESS OF PAVEMENT COURSES. NO CLAIMS FOR EXCESS QUANTITY OF BASE MATERIALS DUE TO IMPROPER SUBGRADE PREPARATION WILL BE HONORED.

D. PRIOR TO PLACEMENT OF THE BASE COURSE, ALL SUBGRADES MUST BE APPROVED BY THE MUNICIPAL ENGINEER, SOILS ENGINEER AND/OR OWNER.

3. CONCRETE WORK

A. ALL EXTERIOR CONCRETE SHALL BE PORTLAND CEMENT CONCRETE CLASS SI OR PV PER (SSRBC) SECTION 1020.04 WITH AIR ENTRAINMENT OF NOT LESS THAN FIVE (5%) OR MORE THAN EIGHT (8%) PERCENT. CONCRETE SHALL BE A MINIMUM OF SIX (6) BAG MIX AND SHALL DEVELOP A MINIMUM OF 3,500 PSI COMPRESSIVE STRENGTH AT FOURTEEN (14) DAYS. ALL CONCRETE SHALL BE BROOM FINISHED PERPENDICULAR TO THE DIRECTION OF TRAVEL. THE ADDITION OF CALCIUM CHLORIDE AND THE SUBSTITUTION OF FLY ASH FOR PORTLAND CEMENT IS PROHIBITED. 1.50 lbs OF COLLATED, FILLIBRATED, POLYPROPYLENE OLEFIN FIBERS 0.50 TO 0.75 INCHES IN LENGTH SHALL BE ADDED TO EACH CUBIC YARD OF CONCRETE USED FOR SIDEWALKS. THE FIBERS SHALL BE AS MANUFACTURED UNDER THE NAME "FIBERMESH" OR EQUAL.

B. CONCRETE CURB AND/OR COMBINATION CURB AND GUTTER SHALL BE OF THE TYPE SHOWN ON THE PLANS. THE CONTRACTOR IS CAUTIONED TO REFER TO THE CONSTRUCTION STANDARDS AND THE PAVEMENT CROSS-SECTION TO DETERMINE THE GUTTER FLAG THICKNESS AND THE AGGREGATE BASE COURSE THICKNESS BENEATH THE CURB AND GUTTER. PREMOLDED FIBER EXPANSION JOINTS, WITH TWO 3/4" X 18" EPOXY COATED STEEL DOWEL BARS, SHALL BE INSTALLED AT SIXTY (60) FOOT INTERVALS AND AT ALL PC'S, PT'S AND CURB RETURNS. ALTERNATE ENDS OF THE DOWEL BARS SHALL BE GREASED AND FITTED WITH METAL EXPANSION TUBES. SAWED OR FORMED CONTRACTION JOINTS SHALL BE PROVIDED AT NO GREATER THAN FIFTEEN (15) FOOT INTERVALS BETWEEN EXPANSION JOINTS. NO HONEY-COMBING OF THE CURB AND GUTTER WILL BE ACCEPTED.

C. CURBS SHALL BE DEPRESSED AT LOCATIONS WHERE PUBLIC WALKS/PEDESTRIAN PATHS INTERSECT CURB LINES, AND OTHER LOCATIONS AS DIRECTED, FOR THE PURPOSE OF PROVIDING ACCESSIBILITY. (SEE CONSTRUCTION STANDARDS FOR DETAIL). BARRIER CURB SHALL ALSO BE DEPRESSED AT DRIVEWAY LOCATIONS.

D. THE CURBS SHALL BE BACKFILLED AFTER THEIR CONSTRUCTION AND PRIOR TO THE PLACEMENT OF THE BASE COURSE. THE CONCRETE MUST CURE FOR AT LEAST SEVEN DAYS BEFORE THE CURBS ARE BACKFILLED.

E. CONCRETE SIDEWALK SHALL BE IN ACCORDANCE WITH THE ABOVE AND THE PLANS. PROVIDE SCORED JOINTS AT 5 FOOT INTERVALS AND 1/2 " PREMOLDED FIBER EXPANSION JOINTS AT 50 FOOT INTERVALS, AND ADJACENT TO CONCRETE CURBS, DRIVEWAYS, FOUNDATIONS, ETC.

F. CONCRETE DRIVEWAY APRONS SHALL BE IN ACCORDANCE WITH THE ABOVE AND THE PLANS. PROVIDE 6" X 6" NO. 6 WELDED WIRE MESH IN DRIVEWAYS. PROVIDE 1/2 " PREMOLDED FIBER EXPANSION JOINT ADJACENT TO CURBS AND CONCRETE SIDEWALKS. PROVIDE SAWED OR FORMED CONTRACTION JOINT AT MID-POINT AND 15 FOOT MAXIMUM.

G. STANDARD REINFORCED CONCRETE PAVEMENT SHALL BE IN ACCORDANCE WITH THE ABOVE AND THE PLANS. SAWED OR FORMED CONTRACTION EXPANSION JOINTS SHALL BE AS SHOWN ON THE PLANS.

H. CONCRETE CURING AND PROTECTION SHALL BE IN ACCORDANCE WITH (SSRBC) - METHOD I, II, OR III.

I. THE COST OF AGGREGATE BASE OR SUB-BASE UNDER CONCRETE WORK SHALL BE INCLUDED IN THE COST OF THE RESPECTIVE CONCRETE ITEM.

4. FLEXIBLE PAVEMENT

A. THE PAVEMENT MATERIALS FOR BITUMINOUS STREETS, PARKING LOTS, DRIVEWAYS, SIDEWALKS AND PATHS SHALL BE AS DETAILED ON THE PLANS. UNLESS OTHERWISE SHOWN ON THE PLANS, THE FLEXIBLE PAVEMENTS SHALL CONSIST OF AGGREGATE BASE COURSE, TYPE B; BITUMINOUS CONCRETE BINDER COURSE; AND BITUMINOUS CONCRETE SURFACE COURSE; OF THE THICKNESS AND MATERIALS SPECIFIED ON THE PLANS. THICKNESSES SPECIFIED SHALL BE CONSIDERED TO BE THE MINIMUM COMPACTED THICKNESS. THE PAVING IS TO BE DONE IN ACCORD WITH THE STANDARD SPECIFICATIONS FOR ROAD AND BRIDGE CONSTRUCTION IN ILLINOIS.

B. ALL TRAFFIC SHALL BE KEPT OFF THE COMPLETED AGGREGATE BASE UNTIL THE BINDER COURSE IS LAID. THE AGGREGATE BASE SHALL BE UNIFORMLY PRIME COATED AT A RATE OF 0.4 TO 0.5 GALLONS PER SQUARE YARD PRIOR TO PLACING THE BINDER COURSE. PRIME COAT MATERIALS SHALL BE BITUMINOUS M.C. - 30.

C. PRIOR TO PLACEMENT OF THE SURFACE COURSE, THE BINDER COURSE SHALL BE CLEANED, AND TACK COATED IF DUSTY OR DIRTY. ALL DAMAGED AREAS IN THE BINDER, BASE OR CURB SHALL BE REPAIRED TO THE SATISFACTION OF THE OWNER PRIOR TO LAYING THE SURFACE COURSE. THE CONTRACTOR SHALL PROVIDE WHATEVER EQUIPMENT AND MANPOWER NECESSARY, INCLUDING THE USE OF POWER BROOMS IF REQUIRED BY THE OWNER, TO PREPARE THE PAVEMENT FOR APPLICATION OF THE SURFACE COURSE. THE TACK COAT SHALL BE UNIFORMLY APPLIED TO THE BINDER COURSE AT A RATE OF 0.05 TO 0.10 GALLONS PER SQUARE YARD. TACK COAT SHALL BE AS SPECIFIED IN (SSRBC) SECTION 406.02.

D. SEAMS IN BASE, BINDER AND SURFACE COURSE SHALL BE STAGGERED A MINIMUM OF 6".

E. FOR NEW STREETS, THE CONTRACTOR SHALL PERMIT THE BITUMINOUS CONCRETE BINDER COURSE TO WEATHER ONE (1) WINTER SEASON PRIOR TO THE INSTALLATION OF THE BITUMINOUS CONCRETE SURFACE COURSE UNLESS OTHERWISE SPECIFIED BY THE MUNICIPAL ENGINEER OR OWNER.

5. TESTING AND FINAL ACCEPTANCE

A. THE CONTRACTOR SHALL FOLLOW THE QUALITY CONTROL TESTING PROGRAM FOR CONCRETE AND PAVEMENT MATERIALS ESTABLISHED BY THE OWNER AND/OR MUNICIPALITY. TESTING SHALL BE DONE IN ACCORD WITH THE STANDARD SPECIFICATIONS FOR ROAD AND BRIDGE CONSTRUCTION IN ILLINOIS AND THE TESTING REQUIREMENTS OF THE MUNICIPALITY.

B. WHEN REQUESTED BY THE OWNER, TEST RESULTS AND DOCUMENTATION FOR THE CONCRETE, BASE COURSE, BITUMINOUS CONCRETE BINDER, AND/OR SURFACE COURSE, SHALL BE SUBMITTED FOR VERIFICATION.

C. PRIOR TO PLACEMENT OF THE BITUMINOUS CONCRETE SURFACE COURSE, THE CONTRACTOR, WHEN REQUIRED BY THE OWNER OR MUNICIPALITY, SHALL OBTAIN SPECIMENS OF THE BINDER COURSE WITH A CORE DRILL WHERE DIRECTED, FOR THE PURPOSE OF THICKNESS VERIFICATION.

D. WHEN REQUIRED BY THE OWNER OR MUNICIPALITY, THE CONTRACTOR SHALL OBTAIN SPECIMENS OF THE FULL DEPTH BITUMINOUS CONCRETE PAVEMENT STRUCTURE WITH A CORE DRILL WHERE DIRECTED, IN ORDER TO CONFIRM THE PLAN THICKNESS. DEFICIENCIES IN THICKNESS SHALL BE ADJUSTED FOR BY THE METHOD DESCRIBED IN (SSRBC), ART. 407.10.

E. FINAL ACCEPTANCE OF THE TOTAL PAVEMENT INSTALLATION SHALL BE SUBJECT TO THE TESTING AND CHECKING REQUIREMENTS CITED ABOVE.

VILLAGE OF WHEELING PAVING NOTES

PAVING NOTES

1. Subgrade shall be finished to ± 0.1 foot of design subgrade elevations by the earthwork contractor. Fine grading for pavements and curb & gutter shall be the responsibility of the paving contractor.
2. Prior to the placement of any pavement including curbs, the subgrade shall be proof-rolled with a fully loaded tandem axle dump truck (minimum 20 tons). Proof rolling shall be witnessed by the materials consultant and the Village of Wheeling Engineering Inspector. Proof rolling shall be required on the base material as well. The density of the subgrade and base material as well as the Hot-Mix Asphalt shall be tested by a materials consultant. The test results shall be provided to the engineer for his use in determining the adequacy of the pavement design.
3. Base course shall be Aggregate Base Course, Type B, conforming to the standard specifications (see plans for thickness). Material shall be crushed limestone, grade 8 or grade 9, virgin material or Village approved.
4. Hot Mix Asphalt (HMA) pavement shall be constructed using Hot-Mix Asphalt Binder Course, IL-19.0, N50 and Hot-Mix Asphalt Surface Course, Mix "C", N50 material.
5. All removal items shall be saw-cut full depth prior to the commencement of the removal process.
6. Curb and gutter, barrier curb, sidewalk, and driveways shall be a six (6) bag mix Portland Cement Concrete (PCC) with air entrainment content between 5 and 8%. Maximum allowable slump is four (4) inches. Curing compound shall be white pigmented and applied after finishing per IDOT specifications. Locations of water and sanitary sewer service lines shall be clearly marked on all new curbs.
7. Saw cut existing curb at limit of the work and replace with depressed curb as required. Drill and dowel all new curb, including depressed curb to existing as required.
8. A 3/4 inch fiber expansion joint shall be installed when the curb abuts a sidewalk, existing curb, or any other existing concrete pavement.
9. Curb and gutter and barrier curb shall have sawed contraction joints at maximum intervals of twenty (20) feet and 3/4 inch fiber expansion joint with two (2) oiled and capped one (1) inch smooth epoxy coated dowel bars at maximum intervals of one-hundred (100) feet.
10. All commercial, industrial and truck loading areas in the right-of-way shall be a minimum of eight (8) inch thick Portland Cement Concrete on a four (4) inch compacted granular base.
11. Driveway apron removal and replacement for all business, industrial and commercial areas shall include the installation of a truncated dome handicapped sidewalk ramp on both sides of the apron unless otherwise approved by the Village of Wheeling Engineering Inspector.
12. All driveway material thicknesses shall meet the minimum pavement standard requirements of the Village of Wheeling.
13. All pavement areas such as driveways shall have a two (2) inch diameter galvanized steel conduit buried beneath them at a depth of 24" (minimum) for future street light cable(s). The conduit shall extend a minimum of three (3) feet beyond the back of curb or edge of the pavement if no curb exists.
14. All dimensions for curbs are to be back of curb, unless otherwise specified.
15. The use of cold-patch for temporary pavement patching shall be approved by the Village of Wheeling Engineering Inspector **prior** to placement.

SANITARY SEWER NOTES

1. GENERAL

A. SANITARY SEWER PIPE SHALL BE PVC (POLYVINYL CHLORIDE) PLASTIC PIPE WITH A STANDARD DIMENSION RATIO (SDR) OF 26 CONFORMING TO ASTM D-3034 WITH PUSH-ON JOINTS CONFORMING TO ASTM D-3212 AND PVC (POLYVINYL CHLORIDE) PLASTIC PIPE WITH A STANDARD DIMENSION RATIO (SDR) OF 21 CONFORMING TO ASTM D-2241 WITH PUSH-ON JOINTS CONFORMING TO ASTM D-3139 AS SHOWN ON THE PLANS. PAYMENT SHALL BE MADE AT THE CONTRACT UNIT PRICE PER LINEAL FOOT OF SANITARY SEWER COMPLETE IN PLACE.

B. SANITARY SEWER PIPE 18" AND LARGER, WHERE NOTED ON THE PLANS, OR WHERE THE IEPA MINIMUM SEPARATION CANNOT BE MAINTAINED, SHALL BE ONE OF THE FOLLOWING:

PLAN CODE DESCRIPTION

DIP: DUCTILE IRON WATERMAIN QUALITY PIPE, CLASS 52, (ANSI A-21.51) WITH MECHANICAL OR O-RING GASKETED JOINTS (ANSI A-21.11).

PVC: PRESSURE RATED PVC PIPE MEETING ASTM D-2241 WITH ASTM D-3139 GASKETED JOINT, SDR 26

C. "BAND-SEAL" OR SIMILAR FLEXIBLE TYPE COUPLINGS SHALL BE USED WHEN CONNECTING SEWER PIPES OF DISSIMILAR MATERIALS. "BAND-SEAL", "FERNCO", AND "MISSION" TYPE COUPLINGS SHALL NOT BE USED ON ANY SEWER MAIN.

D. ALL SANITARY SEWERS ARE TO BE CONSTRUCTED USING A LASER INSTRUMENT TO MAINTAIN LINE AND GRADE.

E. ALL FLOOR DRAINS SHALL CONNECT TO THE SANITARY SEWER.

F. CONNECTIONS TO EXISTING SANITARY SEWER SYSTEM SHALL NOT BE DONE UNTIL AUTHORIZED BY THE MUNICIPALITY.

G. WATERMAINS SHALL BE SEPARATED FROM SANITARY SEWERS AND STORM SEWERS IN ACCORDANCE WITH IEPA REQUIREMENTS AS SPECIFIED IN "WATER MAIN" SECTION.

H. NO WATER LINE SHALL BE PLACED IN THE SAME TRENCH AS A SEWER LINE EXCEPT UNDER SPECIAL CIRCUMSTANCES AND THEN ONLY UNDER THE FOLLOWING RULES:
a) PERMISSION SHALL BE OBTAINED FROM THE MUNICIPAL ENGINEERING DEPARTMENT IN WRITING PRIOR TO BEGINNING CONSTRUCTION.
b) THE BOTTOM OF A WATER LINE SHALL BE INSTALLED ON A SHELF A MINIMUM OF 18" ABOVE THE TOP OF THE SEWER AND 18" HORIZONTALLY AWAY FROM THE EDGE OF THE SEWER.

2. BEDDING:

A. BEDDING SHALL CONSIST OF A MINIMUM OF FOUR (4") INCHES OF COMPACTED CRUSHED GRAVEL OR STONE, 1/4 " -3/4 " IN SIZE. THE SEWER SHALL HAVE MECHANICALLY TAMPED CRUSHED GRAVEL OR STONE COVER ABOVE THE TOP OF THE PIPE TO A MINIMUM OF TWELVE (12") INCHES FOR PVC PIPE AND TO THE SPRING LINE FOR DIP. THE BEDDING AND COVER MATERIAL SHALL BE ASTM D-2321 CLASS II FOR PVC PIPE AND ASTM D-448 SIZE 67 FOR DIP PIPE. THE COST OF THE BEDDING AND COVER SHALL BE MERGED WITH THE UNIT PRICE BID FOR THE SEWER.

B. ALL UNSUITABLE MATERIAL SHALL BE REMOVED BELOW THE PROPOSED SANITARY SEWER AND REPLACED WITH COMPACTED CA-6 CRUSHED GRAVEL OR STONE.

C. ALL TRENCHES BENEATH PROPOSED OR EXISTING UTILITIES, PAVEMENTS, ROADWAYS, SIDEWALKS, AND FOR A DISTANCE OF FIVE (5') FEET ON EITHER SIDE OF SAME, AND/OR WHERE SHOWN ON THE PLANS, SHALL BE BACKFILLED WITH SELECT GRANULAR BACKFILL (CA-6) AND THOROUGHLY MECHANICALLY COMPACTED IN 9" THICK (LOOSE MEASUREMENT) LAYERS. JETTING WITH WATER IS NOT PERMITTED. REFER TO THE TRENCH BACKFILL LIMITS DETAIL.

3. MANHOLES:

A. SANITARY SEWER MANHOLES SHALL BE 4'-0" I.D. PRECAST CONCRETE SECTIONS CONFORMING TO ASTM D-478 WITH PREFORMED BITUMINOUS OR "O" RING JOINTS, IN ACCORDANCE WITH MUNICIPAL REGULATIONS, AND HAVE AN ECCENTRIC CONE INSTALLED TO LINE UP WITH THE MANHOLE STEPS. ALL MANHOLE STEPS SHALL BE AT 16" O.C. SIMILAR TO NEENAH R-1980.

B. ALL PIPE CONNECTION OPENINGS SHALL BE PRECAST WITH RESILIENT RUBBER WATER TIGHT SLEEVES. THE BOTTOM OF MANHOLE SHALL HAVE A CONCRETE BENCH POURED TO FACILITATE SMOOTH FLOWS.

4. FRAMES AND LIDS:

A. ALL SANITARY SEWER MANHOLE FRAMES AND LIDS SHALL BE NEENAH R-1712 UNLESS OTHERWISE NOTED ON THE PLANS. THE LIDS SHALL HAVE RECESSED (CONCEALED) PICK HOLE AND BE SELF SEALING WITH AN "O" RING GASKET. THE LIDS SHALL HAVE THE WORDS "SANITARY" EMBOSSED ON THE SURFACE. THE JOINTS BETWEEN FRAME AND CONCRETE SECTION SHALL BE SEALED WITH A BUTYL ROPE.

B. A MAXIMUM OF EIGHT (8) INCHES OF CONCRETE ADJUSTING RINGS SHALL BE USED TO ADJUST FRAME ELEVATIONS. RINGS SHALL BE SEALED TOGETHER WITH BUTYL ROPE.

5. DROP MANHOLE ASSEMBLIES:

A. DROP MANHOLE ASSEMBLIES: DROP MANHOLE ASSEMBLIES SHALL BE PROVIDED AT THE JUNCTION OF SANITARY SEWERS WHERE THE DIFFERENCE IN INVERT GRADES EXCEEDS TWO FEET (2'), OR AS SHOWN ON THE PLANS. THE ENTIRE DROP ASSEMBLY SHALL BE CAST IN CONCRETE MONOLITHICALLY WITH THE MANHOLE BARREL SECTION.

6. CLEANING:

A. ALL MANHOLES AND PIPES SHALL BE THOROUGHLY CLEANED OF DIRT AND DEBRIS, AND ALL VISIBLE LEAKAGE ELIMINATED, BEFORE FINAL INSPECTION AND ACCEPTANCE.

7. TESTING:

A. DEFLECTION AND LEAKAGE TESTING WILL BE REQUIRED. THE PROCEDURE AND ALLOWABLE TESTING LIMITS SHALL BE AS SPECIFIED IN THE "STANDARD SPECIFICATIONS FOR WATER AND SEWER MAIN CONSTRUCTION IN ILLINOIS", OR MUNICIPAL CODES. IN THE EVENT OF A DISCREPANCY BETWEEN THE STANDARD SPECIFICATIONS AND THE MUNICIPAL CODE, THE MUNICIPAL CODE SHALL GOVERN. THE FULL LENGTH OF THE SANITARY SEWER IS REQUIRED TO BE BOTH AIR TESTED AND DEFLECTION TESTED.

B. TESTING THE ALIGNMENT/STRAIGHTNESS SHALL BE IN ACCORDANCE WITH MUNICIPAL CODE.

C. TESTING OF MANHOLES TO BE IN ACCORDANCE WITH ASTM C-969.

8. TELEVISING:

A. ALL SANITARY SEWERS SHALL BE TELEVISED AND A COPY OF THE TAPE /DVD AND A WRITTEN REPORT SHALL BE SUBMITTED AND REVIEWED BY THE OWNER OR MUNICIPALITY BEFORE FINAL ACCEPTANCE. THE REPORT SHALL INCLUDE STUB LOCATION AS WELL AS A DESCRIPTION OF ALL DEFECTS, WATER LEVEL, LEAKS AND LENGTHS. IDENTIFY MANHOLE TO MANHOLE BOTH VERBALLY AND ON-SCREEN USING MANHOLE NUMBERS FROM APPROVED PLANS. ORDER OF WRITTEN REPORT SHALL BE THE SAME AS THE VIDEO TAPES/DVDS.

9. TEST RESULTS:

A. IF THE SANITARY SEWER INSTALLATION FAILS TO MEET THE TEST REQUIREMENTS SPECIFIED, THE CONTRACTOR SHALL DETERMINE THE CAUSE OR CAUSES OF THE DEFECT AND SHALL, AT HIS OWN EXPENSE, REPAIR OR REPLACE ALL MATERIALS, AND WORKMANSHIP AS MAY BE NECESSARY TO COMPLY WITH THE TEST REQUIREMENTS.

10. CERTIFICATION:

A. CONTRACTOR SHALL SUBMIT CERTIFIED COPIES OF ALL REPORTS OF TESTS CONDUCTED BY AN INDEPENDENT LABORATORY BEFORE INSTALLATION OF PVC PLASTIC PIPE. TESTS SHALL BE CONDUCTED IN ACCORDANCE WITH STANDARD METHOD OF TEST FOR "EXTERNAL LOADING PROPERTIES OF PLASTIC PIPE BY PARALLEL PLATE LOADING", ASTM STANDARDS D-2412 OR D-2241 AS APPROPRIATE FOR THE PIPE TO BE USED. TESTS SHALL ALSO BE CONDUCTED TO DEMONSTRATE JOINT PERFORMANCE AT 5% MAXIMUM DIAMETRIC DEFLECTION OF THE SPIGOT.

11. RECORD DRAWINGS:

A. THE CONTRACTOR SHALL PROVIDE ALL INFORMATION TO PREPARE RECORD DRAWING(S) INCLUDING SERVICE STUB LOCATIONS, TO SPACECO. SPACECO SHALL PREPARE RECORD DRAWINGS AND SUBMIT TO APPROPRIATE PUBLIC AGENCIES. IF FINAL MEASUREMENTS INDICATE DEFICIENCIES, THE CONTRACTOR, AT HIS OWN COST, WILL ADJUST MANHOLES AND/OR SEWERS TO PROPER ELEVATIONS AND OTHERWISE CORRECT THE DEFICIENCIES.

VILLAGE OF WHEELING SANITARY SEWER NOTES

SANITARY SEWER

1. All sanitary sewers shall be P.V.C. pipe SDR 26 (min.) complying with ASTM D3034, with factory fabricated joints complying with ASTM D3212, and elastomeric gaskets complying with ASTM F-477 or as approved by the Village of Wheeling.
2. Watermain quality sanitary sewer shall be P.V.C. AWWA C-900 complying with ASTM F-477.
3. All sanitary sewer mainline must be a minimum of 8 inches in diameter. All sanitary sewer services must be a minimum of 6 inches in diameter.
4. All sanitary sewer service lines must have a depth of 3.5 feet to the top of the pipe.
5. **Non Shear Couplings** are to be used for all dissimilar pipe connections with prior approval by the Village of Wheeling.
6. All sanitary sewer and sewer joints shall conform to:

MATERIAL	PIPE SPEC.	JOINT SPEC.
DIP – CL 52	ANSI A-21.51	ANSI A-21.11
P.V.C. - SDR 26 MIN.	ASTM D-3034	ASTM D-3212 (Gasket)
P.V.C. – SDR 26 MIN.	ASTM D-2241	ASTM-D-3139 (Gasket)
P.V.C. – AWWA C-900	ASTM D-1784	ASTM-F-477 (Gasket)
A.B.S. (SDR 26)	ASTM D-2680	ASTM D-3212
SOLID (8"–15" TRUSS)	ASTM D-2680	ASTM D-3212

7. Flexible rubber boots shall be used at all connections and penetrations into sanitary manholes.
8. All sanitary manholes to be provided with external "Cretex" type chimney seals.
9. Manholes shall have steps sixteen (16) inches on center with step alignment to be perpendicular to the main pipe flow direction wherever possible.
10. Sanitary services to be 6" diameter D.I.P. Class 52 (min.) with a minimum slope of 1% prior to entering clean out, with a distance from outside of the foundation wall to be 5 feet. Sanitary services to be 6" diameter PVC pipe SDR-26 (min.) with a minimum slope of 1% after leaving clean out. Provide clean out on every lot near each single family house, at the change of pipe material, or as required.
11. All sanitary sewers shall be televised and air tested and manholes vacuum tested as required by the Village of Wheeling and the Metropolitan Water Reclamation District of Greater Chicago.

IN CASE OF CONFLICT, THE MOST RESTRICTIVE STANDARDS AND REQUIREMENTS SHALL GOVERN

NO.	DATE	REMARKS

NO.	DATE	REMARKS

SPECIFICATIONS – 1

800 NORTHGATE PARKWAY
WHEELING, ILLINOIS

CONSULTING ENGINEERS
SITE DEVELOPMENT ENGINEERS
LAND SURVEYORS
9575 W. Higgins Road, Suite 700, Rosemont, Illinois 60018
Phone: (847) 696-4060 Fax: (847) 696-4065
SPACECO INC.

FILENAME: 1642_04_SP01

DATE: 09/16/2016

JOB NO. 1642.04

SHEET S1

VILLAGE OF WHEELING SANITARY SEWER NOTES (CONT.)

12. Sanitary sewer services shall be connected to the main by use of a fitting or manhole. Use of a fitting must be approved by the Village Engineer prior to commencement of any work. For service line of larger than 6 inches in diameter, a manhole shall be constructed at the point of its connection with the sewer main or lateral.

13. All service lines shall exit the foundation wall, as DIP CL-52 at a right angle (90°).

14. All floor drains shall discharge to the sanitary sewer.

15. All objectionable waste containing grease, fats and/or oils shall discharge to an exterior grease interceptor or grease basin, with "water-tight" covers, before discharging into the sanitary sewer, including but not limited to restaurant and food preparation facilities. Automatic dishwasher and effluent domestic waste shall not discharge through the grease interceptor.

STORM SEWER NOTES

1. GENERAL:

A. ALL STORM SEWER PIPE SHALL BE RCP. UNLESS OTHERWISE NOTED ON THE PLANS. IN ACCORDANCE WITH THE FOLLOWING:

PLAN CODE: MATERIAL
RCP: REINFORCED CONCRETE PIPE (ASTM C-76) WITH O-RING GASKETED JOINTS. (ASTM C-443): TYPE 1, CLASS IV. PER SSRBC SECTION 603. ELLIPTICAL RCCP PIPE SHALL BE TYPE 1. HE-III PER SSRBC SECTION 511. PRECAST FLARED END SECTIONS MAY HAVE MASTIC JOINTS. PAYMENTS SHALL BE MADE AT THE CONTRACT UNIT PRICE PER LINEAR FOOT OF STORM SEWER COMPLETE IN PLACE.

DIP: DUCTILE IRON WATERMAIN QUALITY PIPE CLASS 52 (ANSI 21.51) WITH MECHANICAL OR PUSH-ON JOINTS (ANSI 21.11). CEMENT LINING IS NOT REQUIRED.

PVC: POLYVINYL CHLORIDE SEWER PIPE. SDR 26. CONFORMING TO ASTM D-3034 WITH ASTM D-3212 PUSH-ON GASKETED JOINTS.

HDPE: HIGH DENSITY POLYETHYLENE CORRUGATED PIPE WITH SMOOTH INTERIOR MEETING AASHTO M-294 SUCH AS ADS N-12 BY ADVANCED DRAINAGE SYSTEM. COLUMBUS. OH: OR HI-Q BY HANCOR. FINDLEY. OH. JOINTS SHALL BE SPLIT CORRUGATED BANDS BY THE PIPE MANUFACTURER.

UD: RIGID. PERFORATED PVC UNDERDRAIN PIPE (ASTM D-2729). SDR 35. OR SCHEDULE 40. WITH SOLVENT WELD JOINTS AND FILTER FABRIC WRAPPING OR SOCK. PERFORATED HDPE PIPE ALSO ACCEPTABLE.

B. "BAND SEAL" OR SIMILAR COUPLINGS SHALL BE USED WHEN JOINING SEWER PIPES OF DISSIMILAR MATERIALS. "BAND SEAL". "FERNCO". AND "MISSION" TYPE COUPLINGS SHALL NOT BE USED ON SEWER MAINS. CHANGES IN PIPE MATERIAL SHALL BE MADE AT A STRUCTURE.

C. ALL STORM SEWERS ARE TO BE CONSTRUCTED USING A LASER INSTRUMENT TO MAINTAIN LINE AND GRADE.

D. ALL FOOTING DRAIN AND SUMP PUMP DISCHARGE PIPES SHALL BE CONNECTED TO THE STORM SEWER SYSTEM. DOWNSPOUTS SHALL DISCHARGE TO THE GROUND.

E. THE CONTRACTOR SHALL MAINTAIN AT LEAST THREE (3') FEET OF COVER OVER THE TOP OF SHALLOW PIPES AT ALL TIMES DURING CONSTRUCTION. THE CONTRACTOR SHALL MOUND OVER ANY PIPES WHICH HAVE LESS THAN THREE (3') FEET OF COVER DURING CONSTRUCTION UNTIL THE AREA IS FINAL GRADED OR PAVED.

2. BEDDING:

A. ALL STORM SEWERS SHALL BE INSTALLED ON A TYPE A GRANULAR BEDDING. 1/4" TO 3/4" IN SIZE (CA-13) WITH A MINIMUM THICKNESS EQUAL TO 1/4 THE OUTSIDE DIAMETER OF THE SEWER PIPE BUT NOT LESS THAN 4". BLOCKING OF ANY KIND FOR GRADE IS NOT PERMITTED. THE BEDDING MATERIALS SHALL BE COMPACTED TO 90% OF MODIFIED PROCTOR DENSITY. BEDDING SHALL EXTEND TO THE SPRINGLINE ON ALL RCP AND DIP PIPE. BEDDING SHALL EXTEND TO 12" OVER ANY PVC OR HDPE PIPE. COST OF BEDDING SHALL BE CONSIDERED INCIDENTAL TO THE COST OF PIPE. NO SEPERATE PAYMENT SHALL BE MADE FOR THIS.

3. STRUCTURES:

A. MANHOLE. CATCH BASIN AND INLET BOTTOMS SHALL BE PRECAST CONCRETE SECTIONAL UNITS OR MONOLITHIC CONCRETE. MANHOLES AND CATCH BASINS SHALL BE A MINIMUM 4' IN DIAMETER UNLESS OTHERWISE SPECIFIED ON THE PLANS. STRUCTURE JOINTS SHALL BE SEALED WITH O-RING OR BUTYL ROPE. A MAXIMUM OF EIGHT (8") INCHES OF ADJUSTING RINGS SHALL BE USED.

B. A CONCRETE BENCH TO DIRECT FLOWS SHALL BE CONSTRUCTED IN THE BOTTOM OF ALL INLETS AND MANHOLES.

C. THE FRAME. GRATE. AND/OR CLOSED LID SHALL BE CAST IRON OF THE STYLE SHOWN ON THE PLANS.

D. MANHOLE LIDS SHALL BE MACHINE SURFACED. NON-ROCKING DESIGN. THE CLOSED LIDS SHALL HAVE THE WORD "STORM" CAST ON THE LID. THE JOINTS BETWEEN CONCRETE SECTION ADJUSTING RINGS. AND FRAME SHALL BE SEALED WITH A MASTIC COMPOUND.

4. FRENCH DRAIN:

A. ALL LOW POINT STORM STRUCTURES ARE TO HAVE FOUR 1" DIAMETER WEEP HOLES PROVIDED 24" BELOW THE TOP OF LID. THE HOLES SHALL BE COVERED WITH A GEOTEXTILE FILTER FABRIC CEMENTED IN PLACE WITH BITUMINOUS MASTIC. THE DRAIN SHALL BE BACKFILLED WITH BEDDING OR CA-7 CRUSHED STONE TO TOP OF SUBGRADE OR BOTTOM OF TOPSOIL.

5. CASTINGS:

A. CASTINGS FOR SEWER OR OTHER STRUCTURES SHALL BE "NEENAH" OR APPROVED EQUAL. COST OF CASTINGS SHALL BE CONSIDERED INCIDENTAL TO THE COST OF THE STRUCTURE. NO SEPARATE PAYMENT SHALL BE MADE FOR THIS ITEM.

6. CLEANING:

A. THE STORM SEWER SYSTEM SHALL BE THOROUGHLY CLEANED PRIOR TO FINAL INSPECTION AND TESTING.

7. TELEVISING:

A. THE STORM SEWER SYSTEM SHALL BE TELEVISED IF REQUIRED BY MUNICIPALITY.

VILLAGE OF WHEELING STORM SEWER NOTES

STORM SEWER

1) All storm sewer pipes in the public right-of-way shall be reinforced concrete pipe conforming to ASTM C-76 Class IV with confined O-ring gasket joints in compliance with ASTM C-361 or Tylox Super Seal gasket conforming to ASTM C-361.

2) Minimum diameter of storm sewer shall be 12" unless approved otherwise.

3) No storm water shall be discharged to the sanitary sewer system.

4) All storm structures are to have open (grate) lids unless specified as having closed lids (C.L.). All closed lids shall have the words "Village of Wheeling - Storm" casted in it.

5) Rim grades for storm sewer structures located within the curb and gutter are flow line elevations. Elevations of flared end sections shall be interpreted at the invert of the flared end section.

6) A maximum adjustment of twelve inches (12") or three (3) concrete adjusting rings will be permitted for any structure.

7) Inlets shall be connected to a storm sewer after flowing through a catch basin and shall not discharge directly to the storm sewer.

8) All manholes shall be TY A with a minimum inside diameter of 48 inches.

9) All downspouts, footing drains, and outside drains shall discharge to the storm sewer or over ground as approved by the Village of Wheeling.

10) All sump pump drain tile discharges shall be routed to the storm sewer system. Sump pump service connections shall be four (4) inch PVC SDR 26 conforming to ASTM D2751 or ASTM D3034 at a minimum slope of 2% and shall be air gapped. Minimum cover shall be two (2) feet, wherever possible.

WATERMAIN NOTES

1. PIPE MATERIALS:

A. WATERMAINS OR SERVICES 3" OR LARGER IN DIAMETER SHALL BE CONSTRUCTED OF BITUMINOUS COATED. CEMENT LINED DUCTILE IRON PIPE. CLASS 52. CONFORMING TO ANSI A-21.50 (AWWA C150) AND ANSI A-21.51 (AWWA C151). CEMENT MORTAR LINING SHALL CONFORM TO ANSI A-21.4 (AWWA C-104). THE JOINTS SHALL BE O-RING GASKETED PUSH-ON OR MECHANICAL JOINTS CONFORMING TO ANSI A-21.11 (AWWA C-111).

2. FITTINGS:

A. ALL FITTINGS SHALL BE CAST-IRON. WITH MECHANICAL JOINTS AND "MEGALUG" RETAINER GLANDS. AND CEMENT LINED PER ANSI A21.4. COST OF FITTINGS SHALL BE CONSIDERED INCIDENTAL TO THE COST OF THE PIPE.

B. ALL DUCTILE IRON WATERMAIN AND FITTINGS SHALL BE WRAPPED IN 8-MIL POLYETHYLENE WRAP. ALL MECHANICAL JOINT FITTINGS SHALL USE STAINLESS STEEL NUTS AND BOLTS. PAYMENT SHALL BE MADE AT THE CONTRACT UNIT PRICE PER LINEAL FOOT OF WATERMAIN COMPLETE IN PLACE.

3. WATER SERVICES:

A. WATER SERVICE PIPE. 2" IN DIAMETER OR SMALLER. SHALL BE TYPE K COPPER WATER TUBING. CONFORMING TO ASTM B-88 AND B-251. WITH COMPRESSION OR FLARED JOINTS.

4. VALVES:

A. GATE VALVES SHALL BE USED ON ALL WATERMAIN 3" AND LARGER. ALL VALVES SHALL TURN COUNTER-CLOCKWISE TO OPEN. VALVES SHALL BE IRON BODY RESILIENT WEDGE GATE VALVES WITH BRONZE MOUNTED SEATS AND NON-RISING STEMS CONFORMING TO AWWA C-509. THE VALVES SHALL HAVE MECHANICAL JOINTS.

B. THE MECHANICAL JOINTS AND ALL FASTENERS ON THE VALVE BODY SHALL HAVE STAINLESS STEEL NUTS AND BOLTS.

5. VALVE VAULTS:

A. VALVE VAULTS SHALL BE PRECAST CONCRETE STRUCTURES AS NOTED ON THE PLANS. THE FRAME AND LID SHALL BE NEENAH R-1712. OR EQUAL. WITH "WATER" EMBOSSED ON THE LID.

6. FIRE HYDRANTS:

A. FIRE HYDRANTS SHALL CONFORM TO AMERICAN WATER WORKS ASSOCIATION (AWWA) STANDARD NO. C-502. LATEST REVISION. AND SHALL BE A MODEL SHOWN ON THE PLANS AND APPROVED BY THE MUNICIPALITY. FIRE HYDRANTS SHALL BE INSTALLED WITH AN AUXILIARY VALVE AND CAST IRON VALVE BOX. THE PUMPER CONNECTION SHALL FACE ROADWAY.

B. PROVIDE THE RODS FROM THE MAINLINE TEE TO THE AUXILIARY VALVE. AND BETWEEN THE AUXILIARY VALVE AND HYDRANT BARREL WHERE NOT BOLTED TOGETHER.

C. THE BREAK FLANGE AND ALL BELOW GRADE FITTINGS SHALL HAVE STAINLESS STEEL NUTS AND BOLTS.

7. CORPORATION STOPS:

A. CORPORATION STOPS SHALL BE BRONZE BODY KEY STOPS CONFORMING TO AWWA C-800. AND SHALL INCLUDE "J" BEND. TAIL PIECE. AND COMPRESSION FITTINGS. SIZE AND LOCATION AS SHOWN ON PLANS.

B. TAPPING SADDLES SPECIFICALLY DESIGNED FOR USE WITH PVC PIPE SHALL BE IN CONJUCTION WITH THE CORPORATION STOP.

8. SERVICE BOX:

A. PROVIDE CURB VALVE AND CURB BOX AS INDICATED ON THE PLANS. BOX SHALL BE EXTENSION TYPE WITH FOOT PIECE AND STATIONARY RODS FOR SIX (6') FEET OF BURY.

B. MAXIMUM DEFLECTION AT PIPE JOINTS SHALL BE IN ACCORDANCE WITH PIPE MANUFACTURER'S CURRENT RECOMMENDATIONS AND AWWA SPECIFICATIONS.

9. BEDDING:

A. ALL DUCTILE IRON WATERMAIN SHALL HAVE COARSE SAND BEDDING EXTENDED TO AT LEAST SIX INCHES (6") ABOVE THE TOP OF THE PIPE. COST OF BEDDING SHALL BE CONSIDERED INCIDENTAL TO THE COST OF THIS PIPE. NO SEPARATE PAYMENT SHALL BE MADE FOR THIS ITEM.

B. GRANULAR BEDDING MATERIAL OR GRANULAR BACKFILL MATERIAL SHALL BE CAREFULLY PLACED TO 12" OVER THE TOP OF THE PIPE BEFORE FINAL BACKFILLING AND COMPACTION.

C. A MINIMUM DEPTH OF COVER OF 5'-6" SHALL BE MAINTAINED OVER THE WATER LINES. THE MAXIMUM COVER SHALL BE EIGHT (8') FEET EXCEPT AT SPECIAL CROSSINGS.

D. CONCRETE THRUST BLOCKING SHALL BE INSTALLED ON WATERMAIN AT ALL BENDS. TEE. ELBOWS. ETC.

10. IEPA WATERMAIN PROTECTION:

A. HORIZONTAL SEPARATION

a) WATERMAINS SHALL BE LAID AT LEAST TEN FEET HORIZONTALLY FROM ANY EXISTING OR PROPOSED DRAIN. STORM SEWER. SANITARY SEWER OR SEWER SERVICES CONNECTION.
b) WATERMAINS MAY BE LAID CLOSER THAN TEN FEET TO A SEWER LINE WHEN:
1) LOCAL CONDITIONS PREVENT A LATERAL SEPARATION OF TEN FEET:
2) THE WATERMAIN INVERT IS AT LEAST 18 INCHES ABOVE THE CROWN OF THE SEWER: AND
3) THE WATERMAIN IS EITHER IN A SEPARATE TRENCH OR IN THE SAME TRENCH ON AN UNDISTURBED EARTH SHELF LOCATED TO ONE SIDE OF THE SEWER.
c) BOTH THE WATERMAIN AND DRAIN OR SEWER SHALL BE CONSTRUCTED WITH PIPE EQUIVALENT TO WATERMAIN STANDARDS OF CONSTRUCTION WHEN IT IS IMPOSSIBLE TO MEET (a) OR (b) ABOVE. THE DRAIN OR SEWER SHALL BE PRESSURE TESTED TO THE MAXIMUM EXPECTED SURCHARGE HEAD BEFORE BACKFILLING.

B. VERTICAL SEPARATION

a) A WATERMAIN SHALL BE LAID SO THAT ITS INVERT IS 18 INCHES ABOVE THE CROWN OF THE DRAIN OR SEWER WHENEVER WATERMAINS CROSS STORM SEWERS. SANITARY SEWERS OR SEWER SERVICE CONNECTIONS. THE VERTICAL SEPARATION SHALL BE MAINTAINED FOR THAT PORTION OF THE WATERMAIN LOCATED WITHIN TEN FEET HORIZONTALLY OF ANY SEWER OR DRAIN CROSSED. A LENGTH OF WATERMAIN PIPE SHALL BE CENTERED OVER THE SEWER TO BE CROSSED WITH JOINTS EQUIDISTANCE FROM THE SEWER OR DRAIN.
b) BOTH THE WATERMAINS AND SEWER SHALL BE CONSTRUCTED WITH PIPE EQUIVALENT TO WATERMAIN STANDARDS OF CONSTRUCTION WHEN:
1) IT IS IMPOSSIBLE TO OBTAIN THE PROPER VERTICAL SEPARATION AS DESCRIBED IN (a) ABOVE: OR
2) THE WATERMAIN PASSES UNDER A SEWER OR DRAIN.
c) A VERTICAL SEPARATION OF 18 INCHES BETWEEN THE INVERT OF THE SEWER OR DRAIN AND THE CROWN OF THE WATERMAIN SHALL BE MAINTAINED WHERE A WATERMAIN CROSSES UNDER SEWER. SUPPORT THE SEWER OR DRAIN LINES TO PREVENT SETTLING AND BREAKING THE WATER MAIN.
d) CONSTRUCTION SHALL EXTEND ON EACH SIDE OF THE CROSSING UNTIL THE NORMAL DISTANCE FORM THE WATERMAIN TO THE SEWER OR DRAIN LINE IS AT LEAST TEN FEET.

11. TESTING:

A. ALL WATERMAINS SHALL BE PRESSURE TESTED. FLUSHED AND DISINFECTED IN ACCORDANCE WITH AWWA AND MUNICIPAL SPECIFICATIONS. EACH VALVE SECTION SHALL BE PRESSURE TESTED FOR A MINIMUM OF 4 HOURS. ALLOWABLE LEAKAGE IS TO BE ONLY THAT WHICH IS PREDETERMINED BY THE STANDARD SPECIFICATIONS FOR SEWER AND WATERMAIN CONSTRUCTION IN ILLINOIS. AT NO TIME IS THERE TO BE ANY VISIBLE LEAKAGE FROM THE MAIN.

B. CONTRACTOR IS RESPONSIBLE FOR PRESSURE TESTING AGAINST EXISTING WATER VALVES.

VILLAGE OF WHEELING STORM SEWER NOTES

WATERMAIN

1. All water mains shall be pressure tested per requirements of the Village of Wheeling. Leakage test method shall be used to pressure test the watermain. The pressure shall be 150 psi and 200 psi held for 2 hours for domestic water and fire suppression line, respectively.

2. All water mains shall be chlorinated per the requirements of the Village of Wheeling.

3. All water mains to be ductile iron pipe per ANSI A21.51 (AWWA C151), Class 52, with "push on" or mechanical joint as required by the Village of Wheeling. Pipe to be cement lined per ANSI A21.4 (AWWA C104).

4. All new watermain shall be looped. Dead end watermain(s) is not permitted, unless otherwise approved by the Village Engineer.

5. The minimum cover for watermain and services shall be 5.5 feet from finished grade to top of main (6 ft. max. unless approved otherwise by the Village of Wheeling.)

6. Thrust blocks made of Portland Cement Concrete (PCC) of at least 12 inches thick must be use to prevent movement at bends and fittings. All bends of 22 ½ degrees or greater, tees and plugs shall be thrust blocked.

7. All water services shall be installed per the Village Standard.

8. Water service and fire suppression systems shall be made and installed by a licensed plumber, in accordance with the Illinois State Plumbing Code. Fire suppression and water service shall be two separate lines which must originate at the main.

9. Fire sprinkler and water lines must be pressure tested and chlorinated from the point of connection at the existing watermain to the valve inside the building. Contact Village of Wheeling Public Works Utility Division at (847) 279-6920, at least 48 hours prior to tap and inspections.

10. The Village of Wheeling Plumbing and Engineering (847) 459-2620 shall be contacted at least 48 hours prior to all water service work.

11. All valves shall be installed in a minimum, 60 inch diameter precast concrete water-tight vaults.

12. All fire hydrants shall be a red 6 foot bury Mueller A-423 Super Centurion or approved equal confirming with AWWA C-502 standards.

13. All B-boxes shall be 1-1/2" Mueller or Ford telescopic B-box with "WATER" imprinted on the lid of the box and a brass pentagon plug.

14. All fastener hard ware (i.e., nuts, bolts and washers) associated with fittings shall be stainless steel.

15. All fittings shall be restrained by thrust resistant wedge, retainer glands, manufactured with torque limiting twist off nuts.

IN CASE OF CONFLICT, THE MOST RESTRICTIVE STANDARDS AND REQUIREMENTS SHALL GOVERN

NO.	DATE	REMARKS

NO.	DATE	REMARKS

SPECIFICATIONS -2

800 NORTHGATE PARKWAY
WHEELING, ILLINOIS

CONSULTING ENGINEERS
SITE DEVELOPMENT ENGINEERS
LAND SURVEYORS
9575 W. Higgins Road, Suite 700,
Rosemont, Illinois 60018
Phone: (847) 696-4060 Fax: (847) 696-4065
SPACECO INC.

FILENAME: 1642_04_SP02

DATE: 09/16/2016

JOB NO. 1642.04

SHEET
S2
15 OF 22

MWRD GENERAL NOTES

A. REFERENCED SPECIFICATIONS

1. ALL CONSTRUCTION SHALL BE IN ACCORDANCE WITH THE APPLICABLE SECTIONS OF THE FOLLOWING, EXCEPT AS MODIFIED HEREIN OR ON THE PLANS:
   * STANDARD SPECIFICATIONS FOR ROAD AND BRIDGE CONSTRUCTION (LATEST EDITION), BY THE ILLINOIS DEPARTMENT OF TRANSPORTATION (IDOT SS) FOR ALL IMPROVEMENTS EXCEPT SANITARY SEWER AND WATER MAIN CONSTRUCTION;
   * STANDARD SPECIFICATIONS FOR WATER AND SEWER MAIN CONSTRUCTION IN ILLINOIS, LATEST EDITION (SSWS) FOR SANITARY SEWER AND WATER MAIN CONSTRUCTION;
   * VILLAGE OF _____ MUNICIPAL CODE;
   * THE METROPOLITAN WATER RECLAMATION DISTRICT OF GREATER CHICAGO (MWRD) WATERSHED MANAGEMENT ORDINANCE AND TECHNICAL GUIDANCE MANUAL;
   * IN CASE OF CONFLICT BETWEEN THE APPLICABLE ORDINANCES NOTED, THE MORE STRINGENT SHALL TAKE PRECEDENCE AND SHALL CONTROL ALL CONSTRUCTION.

B. NOTIFICATIONS

1. THE MWRD LOCAL SEWER SYSTEMS SECTION FIELD OFFICE MUST BE NOTIFIED AT LEAST TWO (2) WORKING DAYS PRIOR TO THE COMMENCEMENT OF ANY WORK (CALL 708-588-4055).

2. THE VILLAGE OF _____ ENGINEERING DEPARTMENT AND PUBLIC MUST BE NOTIFIED AT LEAST 24 HOURS PRIOR TO THE START OF CONSTRUCTION AND PRIOR TO EACH PHASE OF WORK. CONTRACTOR SHALL DETERMINE ITEMS REQUIRING INSPECTION PRIOR TO START OF CONSTRUCTION OR EACH WORK PHASE.

3. THE CONTRACTOR SHALL NOTIFY ALL UTILITY COMPANIES PRIOR TO BEGINNING CONSTRUCTION FOR THE EXACT LOCATIONS OF UTILITIES AND FOR THEIR PROTECTION DURING CONSTRUCTION. IF EXISTING UTILITIES ARE ENCOUNTERED THAT CONFLICT IN LOCATION WITH NEW CONSTRUCTION, IMMEDIATELY NOTIFY THE ENGINEER SO THAT THE CONFLICT CAN BE RESOLVED. CALL J.U.L.I.E. AT 1-800-892-0123.

C. GENERAL NOTES

1. ALL ELEVATIONS SHOWN ON PLANS REFERENCE THE NORTH AMERICAN VERTICAL DATUM OF 1988 (NAVD88). CONVERSION FACTOR IS _____ FT.

2. MWRD, THE MUNICIPALITY AND THE OWNER OR OWNER'S REPRESENTATIVE SHALL HAVE THE AUTHORITY TO INSPECT, APPROVE, AND REJECT THE CONSTRUCTION IMPROVEMENTS.

3. THE CONTRACTOR(S) SHALL INDEMNIFY THE OWNER, ENGINEER, MUNICIPALITY, MWRD, AND THEIR AGENTS, ETC., FROM ALL LIABILITY INVOLVED WITH THE CONSTRUCTION, INSTALLATION, OR TESTING OF THIS WORK ON THE PROJECT.

4. THE PROPOSED IMPROVEMENTS MUST BE CONSTRUCTED IN ACCORDANCE WITH THE ENGINEERING PLANS AS APPROVED BY MWRD AND THE MUNICIPALITY UNLESS CHANGES ARE APPROVED BY MWRD, THE MUNICIPALITY, OR AUTHORIZED AGENT. THE CONSTRUCTION DETAILS, AS PRESENTED ON THE PLANS, MUST BE FOLLOWED. PROPER CONSTRUCTION TECHNIQUES MUST BE FOLLOWED ON THE IMPROVEMENTS INDICATED ON THE PLANS.

5. THE LOCATION OF VARIOUS UNDERGROUND UTILITIES WHICH ARE SHOWN ON THE PLANS ARE FOR INFORMATION ONLY AND REPRESENT THE BEST KNOWLEDGE OF THE ENGINEER. VERIFY LOCATIONS AND ELEVATIONS PRIOR TO BEGINNING THE CONSTRUCTION OPERATIONS.

6. ANY EXISTING PAVEMENT, SIDEWALK, DRIVEWAY, ETC., DAMAGED DURING CONSTRUCTION OPERATIONS AND NOT CALLED FOR TO BE REMOVED SHALL BE REPLACED AT THE EXPENSE OF THE CONTRACTOR.

7. MATERIAL AND COMPACTION TESTING SHALL BE PERFORMED IN ACCORDANCE WITH THE REQUIREMENTS OF THE MUNICIPALITY, MWRD, AND OWNER.

8. THE UNDERGROUND CONTRACTOR SHALL MAKE ALL NECESSARY ARRANGEMENTS TO NOTIFY ALL INSPECTION AGENCIES.

9. ALL NEW AND EXISTING UTILITY STRUCTURES ON SITE AND IN AREAS DISTURBED DURING CONSTRUCTION SHALL BE ADJUSTED TO FINISH GRADE PRIOR TO FINAL INSPECTION.

10. RECORD DRAWINGS SHALL BE KEPT BY THE CONTRACTOR AND SUBMITTED TO THE ENGINEER AS SOON AS UNDERGROUND IMPROVEMENTS ARE COMPLETED. FINAL PAYMENTS TO THE CONTRACTOR SHALL BE HELD UNTIL THEY ARE RECEIVED. ANY CHANGES IN LENGTH, LOCATION OR ALIGNMENT SHALL BE SHOWN IN RED. ALL WYES OR BENDS SHALL BE LOCATED FROM THE DOWNSTREAM MANHOLE. ALL VALVES, B-BOXES, TEES OR BENDS SHALL BE TIED TO A FIRE HYDRANT.

D. SANITARY SEWER

1. THE CONTRACTOR SHALL TAKE MEASURES TO PREVENT ANY POLLUTED WATER, SUCH AS GROUND AND SURFACE WATER, FROM ENTERING THE EXISTING SANITARY SEWERS.

2. A WATER-TIGHT PLUG SHALL BE INSTALLED IN THE DOWNSTREAM SEWER PIPE AT THE POINT OF SEWER CONNECTION PRIOR TO COMMENCING ANY SEWER CONSTRUCTION. THE PLUG SHALL REMAIN IN PLACE UNTIL REMOVAL IS AUTHORIZED BY THE MUNICIPALITY AND/OR MWRD AFTER THE SEWERS HAVE BEEN TESTED AND ACCEPTED.

3. DISCHARGING ANY UNPOLLUTED WATER INTO THE SANITARY SEWER SYSTEM FOR THE PURPOSE OF SEWER FLUSHING OF LINES FOR THE DEFLECTION TEST SHALL BE PROHIBITED WITHOUT PRIOR APPROVAL FROM THE MUNICIPALITY OR MWRD.

4. ALL SANITARY SEWER CONSTRUCTION SHALL BE IN ACCORDANCE WITH THE STANDARD SPECIFICATIONS FOR WATER AND SEWER MAIN CONSTRUCTION IN ILLINOIS (LATEST EDITION).

5. ALL FLOOR DRAINS SHALL DISCHARGE TO THE SANITARY SEWER SYSTEM.

6. ALL DOWNSPOUTS AND FOOTING DRAINS SHALL DISCHARGE TO THE STORM SEWER SYSTEM.

7. ALL SANITARY SEWER PIPE MATERIALS AND JOINTS (AND STORM SEWER PIPE MATERIALS AND JOINTS IN A COMBINED SEWER AREA) SHALL CONFORM TO THE FOLLOWING:

PIPE MATERIAL	PIPE SPECIFICATIONS	JOINT SPECIFICATIONS
VITRIFIED CLAY PIPE	ASTM C-700	ASTM C-425
REINFORCED CONCRETE SEWER PIPE	ASTM C-76	ASTM C-443
CAST IRON SOIL PIPE	ASTM A-74	ASTM C-564
DUCTILE IRON PIPE	ANSI A21.51	ANSI A21.11
POLYVINYL CHLORIDE (PVC) PIPE		
6-INCH TO 15-INCH DIAMETER SDR 26	ASTM D-3034	ASTM D-3212
18-INCH TO 27-INCH DIAMETER F/DY=46	ASTM F-679	ASTM D-3212
HIGH DENSITY POLYETHYLENE (HDPE)	ASTM D-3350 ASTM D-3035	ASTM D-3261,F-2620 (HEAT FUSION) ASTM D-3212,F-477 (GASKETED)
WATER MAIN QUALITY PVC		
4-INCH TO 36-INCH	ASTM D-2241	ASTM D-3139
4-INCH TO 12-INCH	AWWA C900	ASTM D-3139
14-INCH TO 48-INCH	AWWA C905	ASTM D-3139

THE FOLLOWING MATERIALS ARE ALLOWED ON A QUALIFIED BASIS SUBJECT TO DISTRICT REVIEW AND APPROVAL PRIOR TO PERMIT ISSUANCE. A SPECIAL CONDITION WILL BE ADDED TO THE PERMIT WHEN THE PIPE MATERIAL BELOW IS USED FOR SEWER CONSTRUCTION OR A CONNECTION IS MADE.

PIPE MATERIAL	PIPE SPECIFICATIONS	JOINT SPECIFICATIONS
POLYPROPYLENE (PP) PIPE		
12-INCH TO 24-INCH DOUBLE WALL	ASTM F-2736	D-3212, F-477
30-INCH TO 60-INCH TRIPLE WALL	ASTM F-2764	D3212, F-477

8. ALL SANITARY SEWER CONSTRUCTION (AND STORM SEWER CONSTRUCTION IN COMBINED SEWER AREAS), REQUIRES STONE BEDDING WITH STONE ¼ " TO 1" IN SIZE, WITH MINIMUM BEDDING THICKNESS EQUAL TO ¼ THE OUTSIDE DIAMETER OF THE SEWER PIPE, BUT NOT LESS THAN FOUR (4) INCHES NOR MORE THAN EIGHT (8) INCHES. MATERIAL SHALL BE CA-7, CA-11 OR CA-13 AND SHALL BE EXTENDED AT LEAST 12" ABOVE THE TOP OF THE PIPE WHEN USING PVC.

9. NON-SHEAR FLEXIBLE-TYPE COUPLINGS SHALL BE USED IN THE CONNECTION OF SEWER PIPES OF DISSIMILAR PIPE MATERIALS.

10. ALL MANHOLES SHALL BE PROVIDED WITH BOLTED, WATERTIGHT COVERS. SANITARY LIDS SHALL BE CONSTRUCTED WITH A CONCEALED PICKHOLE AND WATERTIGHT GASKET WITH THE WORD "SANITARY" CAST INTO THE LID.

11. WHEN CONNECTING TO AN EXISTING SEWER MAIN BY MEANS OTHER THAN AN EXISTING WYE, TEE, OR AN EXISTING MANHOLE, ONE OF THE FOLLOWING METHODS SHALL BE USED:
    a) A CIRCULAR SAW-CUT OF SEWER MAIN BY PROPER TOOLS ("SHEWER-TAP" MACHINE OR SIMILAR) AND PROPER INSTALLATION OF HUBWYE SADDLE OR HUB-TEE SADDLE.
    b) REMOVE AN ENTIRE SECTION OF PIPE (BREAKING ONLY THE TOP OF ONE BELL) AND REPLACE WITH A WYE OR TEE BRANCH SECTION.
    c) WITH PIPE CUTTER, NEATLY AND ACCURATELY CUT OUT DESIRED LENGTH OF PIPE FOR INSERTION OF PROPER FITTING, USING "BAND SEAL" OR SIMILAR COUPLINGS TO HOLD IT FIRMLY IN PLACE.

12. WHENEVER A SANITARY/COMBINED SEWER CROSSES UNDER A WATERMAIN, THE MINIMUM VERTICAL DISTANCE FROM THE TOP OF THE SEWER TO THE BOTTOM OF THE WATERMAIN SHALL BE 18 INCHES. FURTHERMORE, A MINIMUM HORIZONTAL DISTANCE OF 10 FEET BETWEEN SANITARY/COMBINED SEWERS AND WATERMAINS SHALL BE MAINTAINED UNLESS: THE SEWER IS LAID IN A SEPARATE TRENCH, KEEPING A MINIMUM 18" VERTICAL SEPARATION; OR THE SEWER IS LAID IN THE SAME TRENCH WITH THE WATERMAIN LOCATED AT THE OPPOSITE SIDE ON A BENCH OF UNDISTURBED EARTH, KEEPING A MINIMUM 18" VERTICAL SEPARATION. IF EITHER THE VERTICAL OR HORIZONTAL DISTANCES DESCRIBED CANNOT BE MAINTAINED, OR THE SEWER CROSSES ABOVE THE WATER MAIN, THE SEWER SHALL BE CONSTRUCTED TO WATER MAIN STANDARDS OR IT SHALL BE ENCASED WITH A WATER MAIN QUALITY CARRIER PIPE WITH THE ENDS SEALED.

13. ALL EXISTING SEPTIC SYSTEMS SHALL BE ABANDONED. ABANDONED TANKS SHALL BE FILLED WITH GRANULAR MATERIAL OR REMOVED.

14. ALL SANITARY MANHOLES, (AND STORM MANHOLES IN COMBINED SEWER AREAS), SHALL HAVE A MINIMUM INSIDE DIAMETER OF 48 INCHES, AND SHALL BE CAST IN PLACE OR PRE-CAST REINFORCED CONCRETE.

15. ALL SANITARY MANHOLES, (AND STORM MANHOLES IN COMBINED SEWER AREAS), SHALL HAVE PRECAST "RUBBER BOOTS" THAT CONFORM TO ASTM C-923 FOR ALL PIPE CONNECTIONS. PRECAST SECTIONS SHALL CONSIST OF MODIFIED GROOVE TONGUE AND RUBBER GASKET TYPE JOINTS.

16. ALL ABANDONED SANITARY SEWERS SHALL BE PLUGGED AT BOTH ENDS WITH AT LEAST 2 FEET LONG NON-SHRINK CONCRETE OR MORTAR PLUG.

17. EXCEPT FOR FOUNDATION/FOOTING DRAINS PROVIDED TO PROTECT BUILDINGS, OR PERFORATED PIPES ASSOCIATED WITH VOLUME CONTROL FACILITIES, DRAIN TILES/FIELD TILES/UNDERDRAINS/PERFORATED PIPES ARE NOT ALLOWED TO BE CONNECTED TO OR TRIBUTARY TO COMBINED SEWERS, SANITARY SEWERS, OR STORM SEWERS TRIBUTARY TO COMBINED SEWERS IN COMBINED SEWER AREAS. CONSTRUCTION OF NEW FACILITIES OF THIS TYPE IS PROHIBITED; AND ALL EXISTING DRAIN TILES AND PERFORATED PIPES ENCOUNTERED WITHIN THE PROJECT AREA SHALL BE PLUGGED OR REMOVED, AND SHALL NOT BE CONNECTED TO COMBINED SEWERS, SANITARY SEWERS, OR STORM SEWERS TRIBUTARY TO COMBINED SEWERS.

18. A BACKFLOW PREVENTER IS REQUIRED FOR ALL DETENTION BASINS TRIBUTARY TO COMBINED SEWERS. REQUIRED BACKFLOW PREVENTERS SHALL BE INSPECTED AND EXERCISED ANNUALLY BY THE PROPERTY OWNER TO ENSURE PROPER OPERATION, AND ANY NECESSARY MAINTENANCES SHALL BE PERFORMED TO ENSURE FUNCTIONALITY. IN THE EVENT OF A SEWER SURCHARGE INTO AN OPEN DETENTION BASIN TRIBUTARY TO COMBINED SEWERS, THE PERMITTEE SHALL ENSURE THAT CLEAN UP AND WASH OUT OF SEWAGE TAKES PLACE WITHIN 48 HOURS OF THE STORM EVENT.

E. EROSION AND SEDIMENT CONTROL

1. THE CONTRACTOR SHALL INSTALL THE EROSION AND SEDIMENT CONTROL DEVICES AS SHOWN ON THE APPROVED EROSION AND SEDIMENT CONTROL PLAN.

2. EROSION AND SEDIMENT CONTROL PRACTICES SHALL BE FUNCTIONAL PRIOR TO HYDROLOGIC DISTURBANCE OF THE SITE.

3. ALL DESIGN CRITERIA, SPECIFICATIONS, AND INSTALLATION OF EROSION AND SEDIMENT CONTROL PRACTICES SHALL BE IN ACCORDANCE WITH THE ILLINOIS URBAN MANUAL.

4. A COPY OF THE APPROVED EROSION AND SEDIMENT CONTROL PLAN SHALL BE MAINTAINED ON THE SITE AT ALL TIMES.

5. INSPECTIONS AND DOCUMENTATION SHALL BE PERFORMED, AT A MINIMUM:
   a) UPON COMPLETION OF INITIAL EROSION AND SEDIMENT CONTROL MEASURES, PRIOR TO ANY SOIL DISTURBANCE.
   b) ONCE EVERY SEVEN (7) CALENDAR DAYS AND WITHIN 24 HOURS OF THE END OF A STORM EVENT WITH GREATER THAN 0.5 INCH OF RAINFALL OR LIQUID EQUIVALENT PRECIPITATION.

6. SOIL DISTURBANCE SHALL BE CONDUCTED IN SUCH A MANNER AS TO MINIMIZE EROSION. IF STRIPPING, CLEARING, GRADING, OR LANDSCAPING ARE TO BE DONE IN PHASES, THE CO-PERMITTEE SHALL PLAN FOR APPROPRIATE SOIL EROSION AND SEDIMENT CONTROL MEASURES.

7. A STABILIZED MAT OF CRUSHED STONE MEETING THE STANDARDS OF THE ILLINOIS URBAN MANUAL SHALL BE INSTALLED AT ANY POINT WHERE TRAFFIC WILL BE ENTERING OR LEAVING A CONSTRUCTION SITE. SEDIMENT OR SOIL REACHING AN IMPROVED PUBLIC RIGHT-OF-WAY, STREET, ALLEY OR PARKING AREA SHALL BE REMOVED BY SCRAPING OR STREET CLEANING AS ACCUMULATIONS WARRANT AND TRANSPORTED TO A CONTROLLED SEDIMENT DISPOSAL AREA.

8. CONCRETE WASHOUT FACILITIES SHALL BE CONSTRUCTED IN ACCORDANCE WITH THE ILLINOIS URBAN MANUAL AND SHALL BE INSTALLED PRIOR TO ANY ON SITE CONSTRUCTION ACTIVITIES INVOLVING CONCRETE.

9. MORTAR WASHOUT FACILITIES SHALL BE CONSTRUCTED IN ADDITION TO CONCRETE WASHOUT FACILITIES FOR ANY BRICK AND MORTAR BUILDING ENVELOPE CONSTRUCTION ACTIVITIES.

10. TEMPORARY DIVERSIONS SHALL BE CONSTRUCTED AS NECESSARY TO DIRECT ALL RUNOFF FROM HYDROLOGICALLY DISTURBED AREAS TO AN APPROPRIATE SEDIMENT TRAP OR BASIN. VOLUME CONTROL FACILITIES SHALL NOT BE USED AS TEMPORARY SEDIMENT BASINS.

12. DISTURBED AREAS OF THE SITE WHERE CONSTRUCTION ACTIVITIES HAVE TEMPORARILY OR PERMANENTLY CEASED SHALL BE STABILIZED WITH TEMPORARY OR PERMANENT MEASURES WITHIN SEVEN (7) DAYS.

13. ALL FLOOD PROTECTION AREAS AND VOLUME CONTROL FACILITIES SHALL, AT A MINIMUM, BE PROTECTED WITH A DOUBLE-ROW OF SILT FENCE (OR EQUIVALENT).

14. VOLUME CONTROL FACILITIES SHALL NOT BE CONSTRUCTED UNTIL ALL OF THE CONTRIBUTING DRAINAGE AREA HAS BEEN STABILIZED.

15. SOIL STOCKPILES SHALL, AT A MINIMUM, BE PROTECTED WITH PERIMETER SEDIMENT CONTROLS. SOIL STOCKPILES SHALL NOT BE PLACED IN FLOOD PROTECTION AREAS OR THEIR BUFFERS.

16. EARTHEN EMBANKMENT SIDE SLOPES SHALL BE STABILIZED WITH APPROPRIATE EROSION CONTROL BLANKET.

17. STORM SEWERS THAT ARE OR WILL BE FUNCTIONING DURING CONSTRUCTION SHALL BE PROTECTED BY APPROPRIATE SEDIMENT CONTROL MEASURES.

18. THE CONTRACTOR SHALL EITHER REMOVE OR REPLACE ANY EXISTING DRAIN TILES AND INCORPORATE THEM INTO THE DRAINAGE PLAN FOR THE DEVELOPMENT. DRAIN TILES CANNOT BE TRIBUTARY TO A SANITARY OR COMBINED SEWER. DRAIN TILES ALLOWED IN COMBINED SEWER AREA FOR GREEN INFRASTRUCTURE PRACTICES.

19. IF DEWATERING SERVICES ARE USED, ADJOINING PROPERTIES AND DISCHARGE LOCATIONS SHALL BE PROTECTED FROM EROSION AND SEDIMENTATION. DEWATERING SYSTEMS SHOULD BE INSPECTED DAILY DURING OPERATIONAL PERIODS. THE SITE INSPECTOR MUST BE PRESENT AT THE COMMENCEMENT OF DEWATERING ACTIVITIES.

20. THE CONTRCTOR SHALL BE RESPONSIBLE FOR TRENCH DEWATERING AND EXCAVATION FOR THE INSTALLATION OF SANITARY SEWERS, STORM SEWERS, WATERMAINS AS WELL AS THEIR SERVICES AND OTHER APPURTENANCES. ANY TRENCH DEWATERING, WHICH CONTAINS SEDIMENT SHALL PASS THROUGH A SEDIMENT SETTLING POND OR EQUALLY EFFECTIVE SEDIMENT CONTROL DEVICE. ALTERNATIVES MAY INCLUDE DEWATERING INTO A SUMP PIT, FILTER BAG OR EXISTING VEGETATED UPSLOPE AREA. SEDIMENT LADEN WATERS SHALL NOT BE DISCHARGE TO WATERWAYS, FLOOD PROTECTION AREAS OR THE COMBINED SEWER SYSTEM.

21. ALL PERMANENT EROSION CONTROL PRACTICES SHALL BE INITIATED WITHIN SEVEN (7) DAYS FOLLOWING THE COMPLETION OF SOIL DISTURBING ACTIVITIES.

22. ALL EROSION AND SEDIMENT CONTROL MEASURES SHALL BE MAINTAINED AND REPAIRED AS NEEDED ON A YEAR-ROUND BASIS DURING CONSTRUCTION AND ANY PERIODS OF CONSTRUCTION SHUTDOWN UNTIL PERMANENT STABILIZATION IS ACHIEVED.

23. ALL TEMPORARY EROSION AND SEDIMENT CONTROL MEASURES SHALL BE REMOVED WITHIN THIRTY (30) DAYS AFTER PERMANENT SITE STABILIZATION.

24. THE EROSION AND SEDIMENT CONTROL MEASURES SHOWN ON THE PLANS ARE THE MINIMUM REQUIREMENTS. ADDITIONAL MEASURES MAY BE REQUIRED, AS DIRECTED BY THE ENGINEER, SITE INSPECTOR, OR MWRD.

NO.	DATE	REMARKS

NO.	DATE	REMARKS

SPECIFICATIONS – 3

800 NORTHGATE PARKWAY
WHEELING, ILLINOIS

CONSULTING ENGINEERS
SITE DEVELOPMENT ENGINEERS
LAND SURVEYORS
9575 W. Higgins Road, Suite 700,
Rosemont, Illinois 60018
Phone: (847) 696-4060 Fax: (847) 696-4065
SPACECO INC.

FILENAME: 1642_04_SP03
DATE: 09/16/2016
JOB NO. 1642.04
SHEET S3
17 OF 22

N:\DGN\1642\1642.04-hamilton.partners\ENG\1642_04_SP03.dgn Default User=randerson

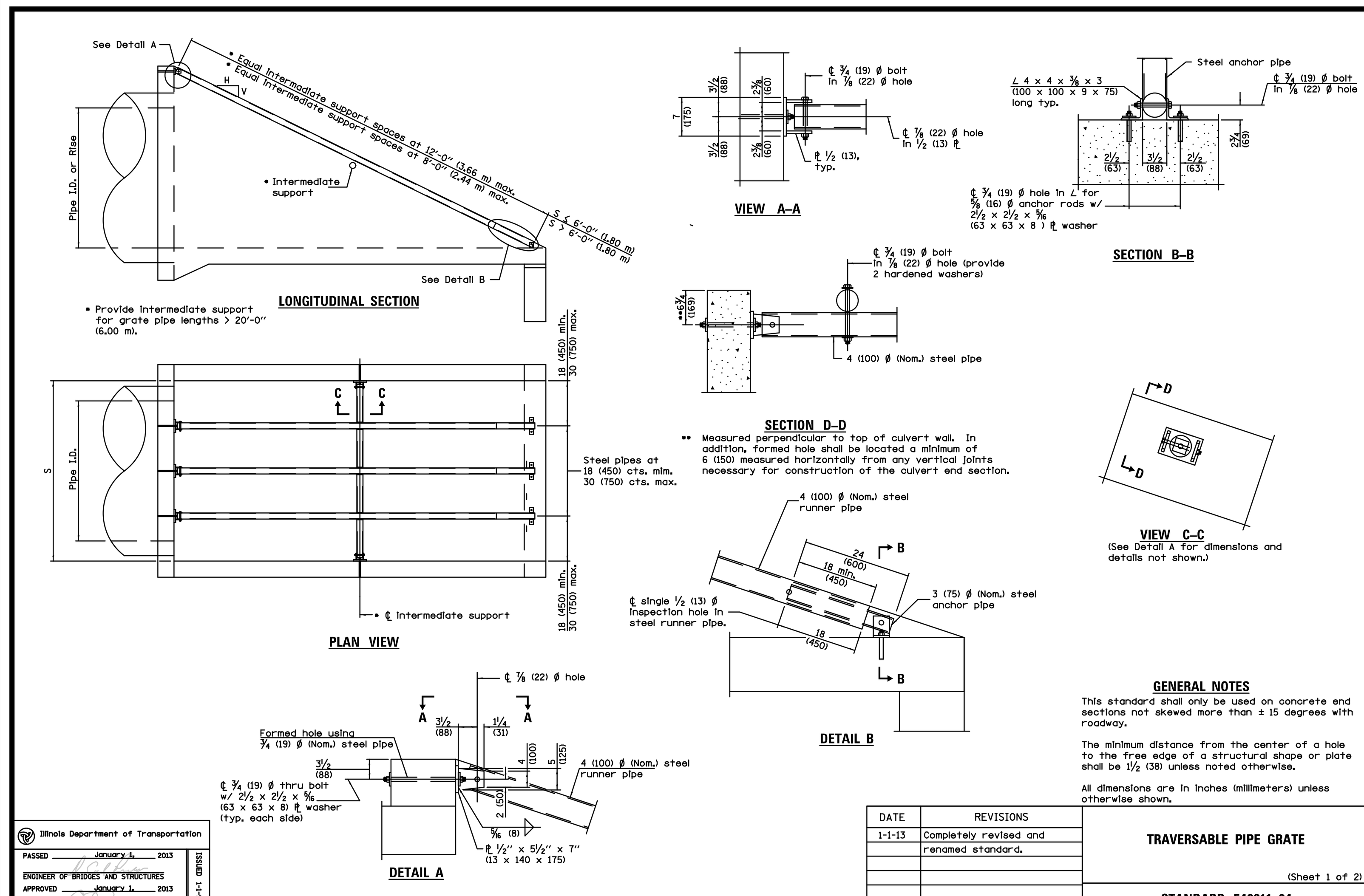

GENERAL NOTES

This standard shall only be used on concrete end sections not skewed more than ± 15 degrees with roadway.

The minimum distance from the center of a hole to the free edge of a structural shape or plate shall be 1 1/2 (38) unless noted otherwise.

All dimensions are in inches (millimeters) unless otherwise shown.

Illinois Department of Transportation
PASSED January 1, 2013
ENGINEER OF BRIDGES AND STRUCTURES
APPROVED January 1, 2013
ENGINEER OF DESIGN AND ENVIRONMENT
ISSUED 1-1-97

DATE	REVISIONS
1-1-13	Completely revised and renamed standard.

TRAVERSABLE PIPE GRATE

(Sheet 1 of 2)

STANDARD 542311-04

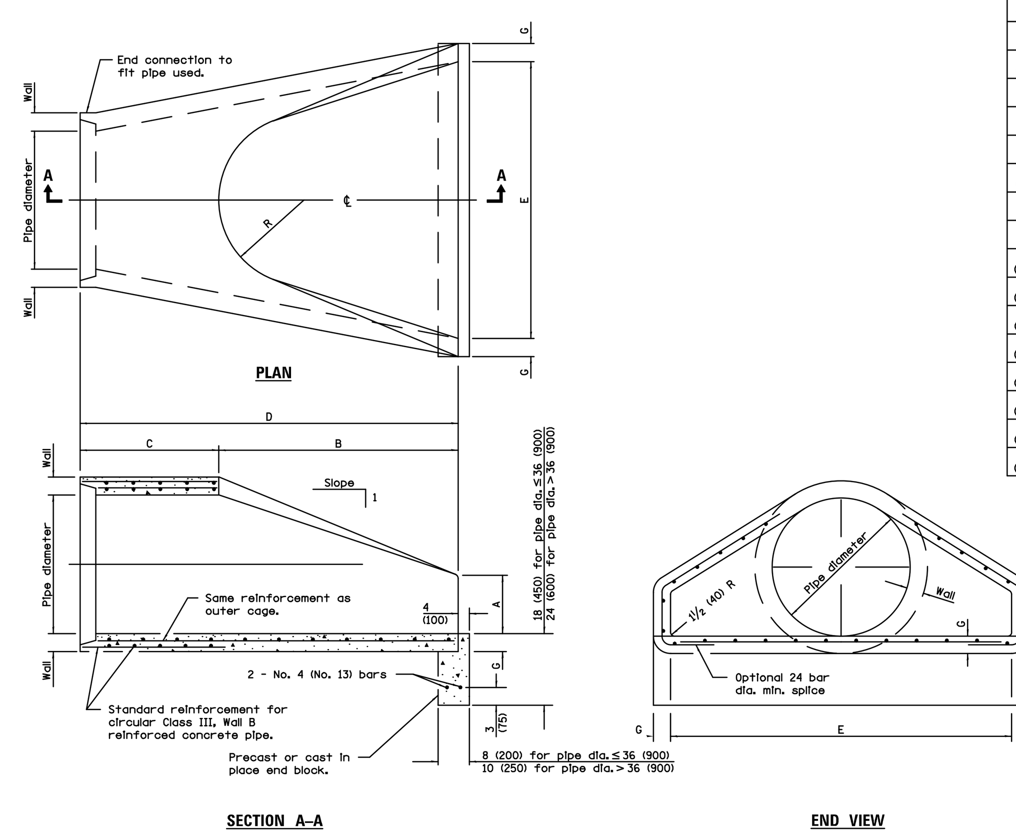

PIPE DIA.	APPROX. QTY. lbs. (kg)	WALL	A	B	C	D	E	G	R	APPROX. SLOPE
12 (300)	530 (240)	2 (51)	4 (102)	24 (610)	4'-0 7/8" (1.241 m)	6'-0 7/8" (1.851 m)	24 (610)	2 (51)	9 (229)	1:2.4
15 (375)	740 (335)	2 1/4 (57)	6 (152)	27 (686)	3'-10" (1.168 m)	6'-1" (1.854 m)	30 (762)	2 1/4 (57)	11 (280)	1:2.4
18 (450)	990 (450)	2 1/2 (64)	9 (229)	27 (686)	3'-10" (1.168 m)	6'-1" (1.854 m)	36 (914)	2 1/2 (64)	12 (305)	1:2.4
21 (525)	1280 (580)	2 3/4 (70)	9 (229)	35 (889)	38 (965)	6'-1" (1.854 m)	3'-6" (1.067 m)	2 3/4 (70)	13 (330)	1:2.4
24 (600)	1520 (690)	3 (76)	9 1/2 (241)	3'-7 1/2" (1.105 m)	30 (762)	6'-1 1/2" (1.867 m)	4'-0" (1.219 m)	3 (76)	14 (356)	1:2.5
27 (675)	1930 (875)	3 1/4 (83)	10 1/2 (267)	4'-0" (1.219 m)	25 1/2 (648)	6'-1 1/2" (1.867 m)	4'-6" (1.372 m)	3 1/4 (83)	14 1/2 (368)	1:2.4
30 (750)	2190 (995)	3 1/2 (89)	12 (305)	4'-6" (1.375 m)	19 3/4 (502)	6'-1 3/4" (1.874 m)	5'-0" (1.524 m)	3 1/2 (89)	15 (381)	1:2.5
33 (825)	3200 (1450)	3 3/4 (95)	13 1/2 (343)	4'-10 1/2" (1.486 m)	39 1/4 (997)	8'-1 3/4" (2.483 m)	5'-6" (1.676 m)	3 3/4 (95)	17 1/2 (445)	1:2.5
36 (900)	4100 (1860)	4 (102)	15 (381)	5'-3" (1.6 m)	34 3/4 (883)	8'-1 3/4" (2.483 m)	6'-0" (1.829 m)	4 (102)	20 (508)	1:2.5
42 (1050)	5380 (2440)	4 1/2 (114)	21 (533)	5'-3" (1.6 m)	35 (889)	8'-2" (2.489 m)	6'-6" (1.981 m)	4 1/2 (114)	22 (559)	1:2.5
48 (1200)	6550 (2970)	5 (127)	24 (610)	6'-0" (1.829 m)	26 (660)	8'-2" (2.489 m)	7'-0" (2.134 m)	5 (127)	22 (559)	1:2.5
54 (1350)	8240 (3740)	5 1/2 (140)	27 (686)	5'-5" (1.651 m)	35 (889)	8'-4" (2.54 m)	7'-6" (2.286 m)	5 1/2 (140)	24 (610)	1:2.0
60 (1500)	8730 (3960)	6 (152)	35 (889)	5'-0" (1.524 m)	39 (991)	8'-3" (2.515 m)	8'-0" (2.438 m)	5 (127)	•	1:1.9
66 (1650)	10710 (4860)	6 1/2 (165)	30 (762)	6'-0" (1.829 m)	27 (686)	8'-3" (2.515 m)	8'-6" (2.591 m)	5 1/2 (140)	•	1:1.7
72 (1800)	12520 (5680)	7 (178)	36 (914)	6'-6" (1.981 m)	21 (533)	8'-3" (2.514 m)	9'-0" (2.743 m)	6 (152	•	1:1.8
78 (1950)	14770 (6700)	7 1/2 (191)	36 (914)	7'-6" (2.286 m)	21 (533)	9'-3" (2.819 m)	9'-6" (2.896 m)	6 1/2 (165)	•	1:1.8
84 (2100)	18160 (8240)	8 (203)	36 (914)	7'-6 1/2" (2.299 m)	21 (533)	9'-3 1/2" (2.832 m)	10'-0" (3.048 m)	6 1/2 (165)	•	1:1.6

• Radius as furnished by manufacturer

GENERAL NOTES

All slope ratios are expressed as units of vertical displacement to units of horizontal displacement (V:H).

All dimensions are in inches (millimeters) unless otherwise shown.

PRECAST REINFORCED CONCRETE FLARED END SECTION

STANDARD 542301-03

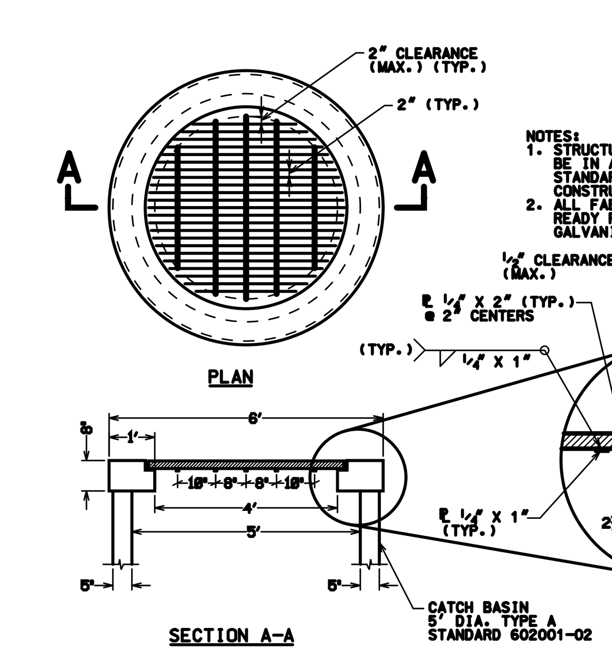

NOTES:
1. STRUCTURAL STEEL SHAPES AND PLATES SHALL BE IN ACCORDANCE WITH SECTION 505.04 OF THE STANDARD SPECIFICATIONS FOR ROAD AND BRIDGE CONSTRUCTION.
2. ALL FABRICATIONS SHALL BE COMPLETED AND READY FOR INSTALLATION PRIOR TO HOT DIPPED GALVANIZING.

CATCH BASIN CB-602 – 5' DIAMETER OPEN GRATE, SPECIAL

NOT TO SCALE

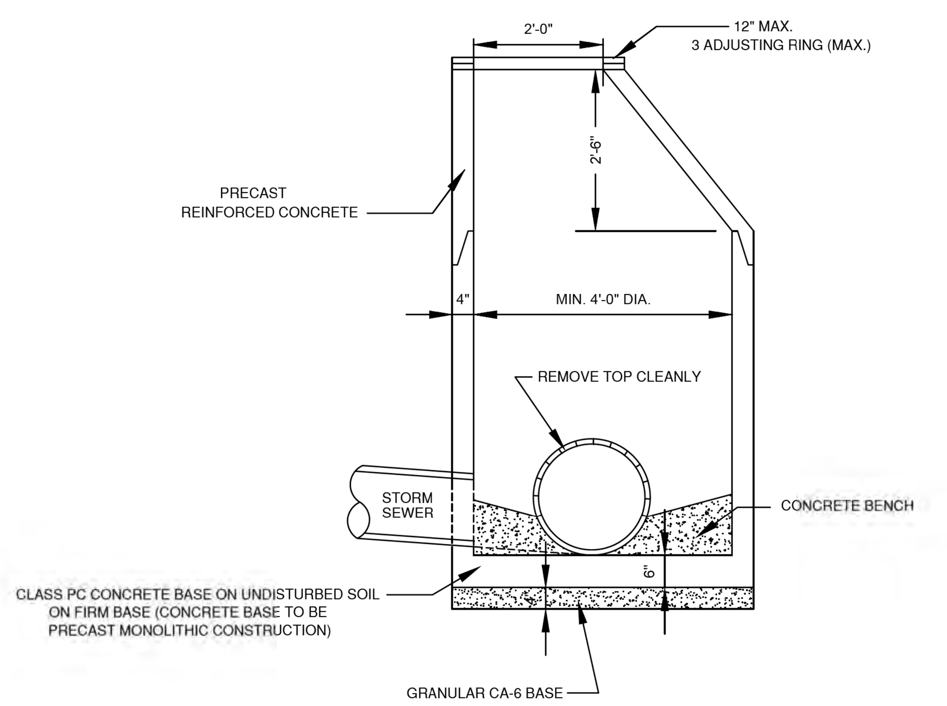

VILLAGE OF WHEELING ENGINEERING DIVISION, 2 COMMUNITY BOULEVARD, WHEELING, IL 60090, WWW.WHEELINGIL.GOV

STORM MANHOLE STANDARD

VILLAGE OF WHEELING SPECIFICATIONS AND DETAILS — FILE LOCATION: N:\ENGINEERING\STANDARDS\STORM

REVISIONS	
S.W.	4-12-00 AUTOCAD FILE
S.W.	9-21-01 PER COMMENTS
D.W.	2-27-03 PER COMMENTS
K.R.G.	9-11-08 AUTOCAD FILE

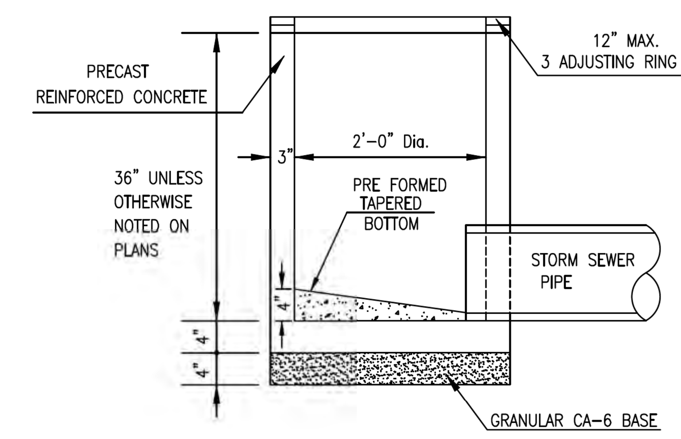

INLET (TYPE A)

VILLAGE OF WHEELING ENGINEERING DIVISION, 2 COMMUNITY BOULEVARD, WHEELING, IL 60090, WWW.WHEELINGIL.GOV

INLET STANDARD

VILLAGE OF WHEELING SPECIFICATIONS AND DETAILS — FILE LOCATION: N:\ENGINEERING\STANDARDS\STORM

REVISIONS	
S.W.	5-17-00 AUTOCAD FILE
S.W.	9-21-01 PER COMMENTS
C.J.C.	01-29-08 AUTOCAD FILE

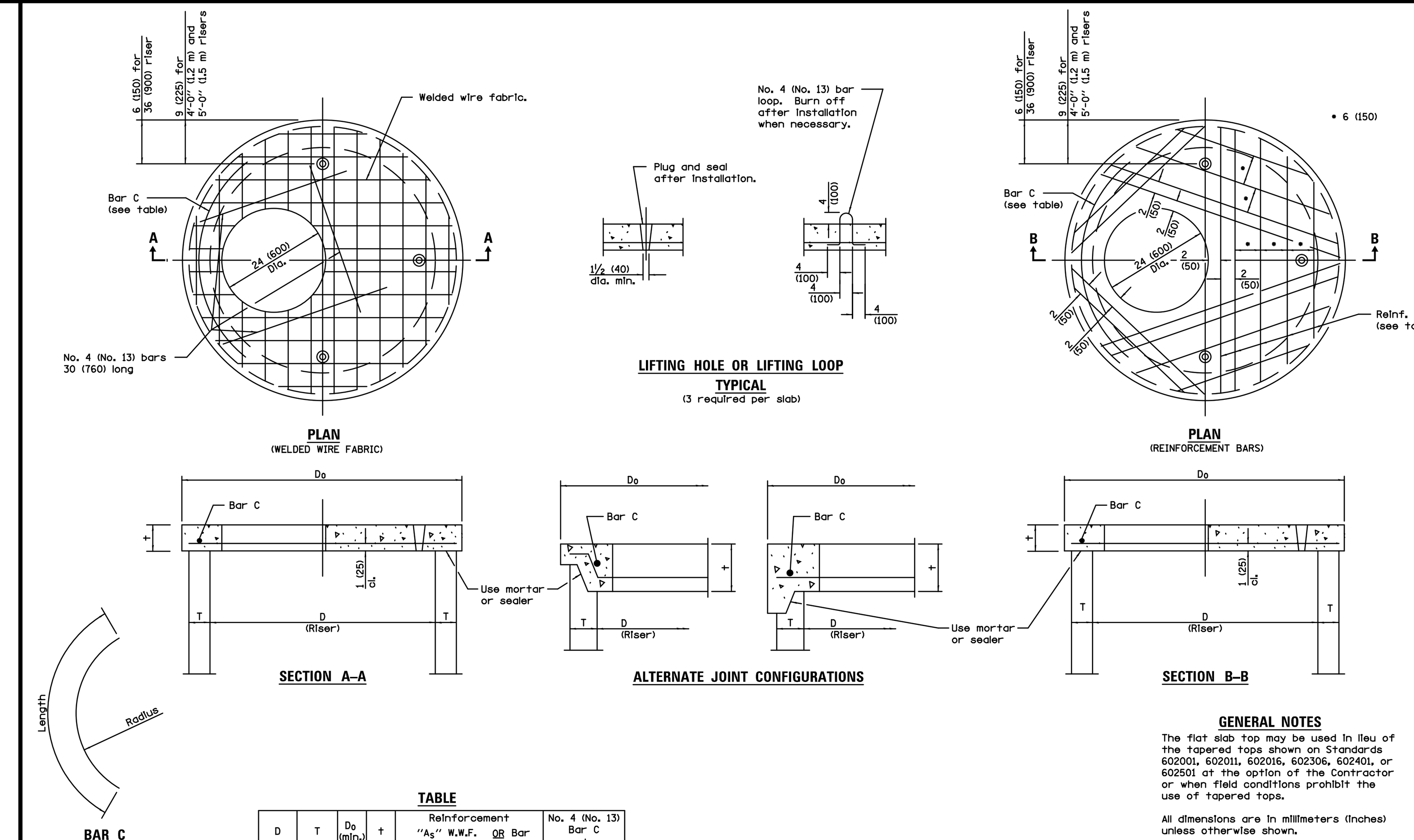

TABLE

D	T	Do (min.)	t	Reinforcement "As" W.W.F. each direction	OR Bar size	No. 4 (No. 13) Bar C Length	Radius
36 (900)	See applicable Standards	D + 2T	6 (150)	0.20 sq. in./ft. (425 sq. mm/m)	No. 4 (No. 13)	4'-0" (1.2 m)	19 (480)
4'-0" (1.2 m)			6 (150)	0.35 sq. in./ft. (740 sq. mm/m)	No. 5 (No. 16)	4'-6" (1.35 m)	26 (660)
5'-0" (1.5 m)			8 (200)	0.35 sq. in./ft. (740 sq. mm/m)	No. 5 (No. 16)	5'-0" (1.5 m)	32 (810)

GENERAL NOTES

The flat slab top may be used in lieu of the tapered tops shown on Standards 602001, 602011, 602016, 602306, 602401, or 602501 at the option of the Contractor or when field conditions prohibit the use of tapered tops.

All dimensions are in millimeters (inches) unless otherwise shown.

PRECAST REINFORCED CONCRETE FLAT SLAB TOP

STANDARD 602601-02

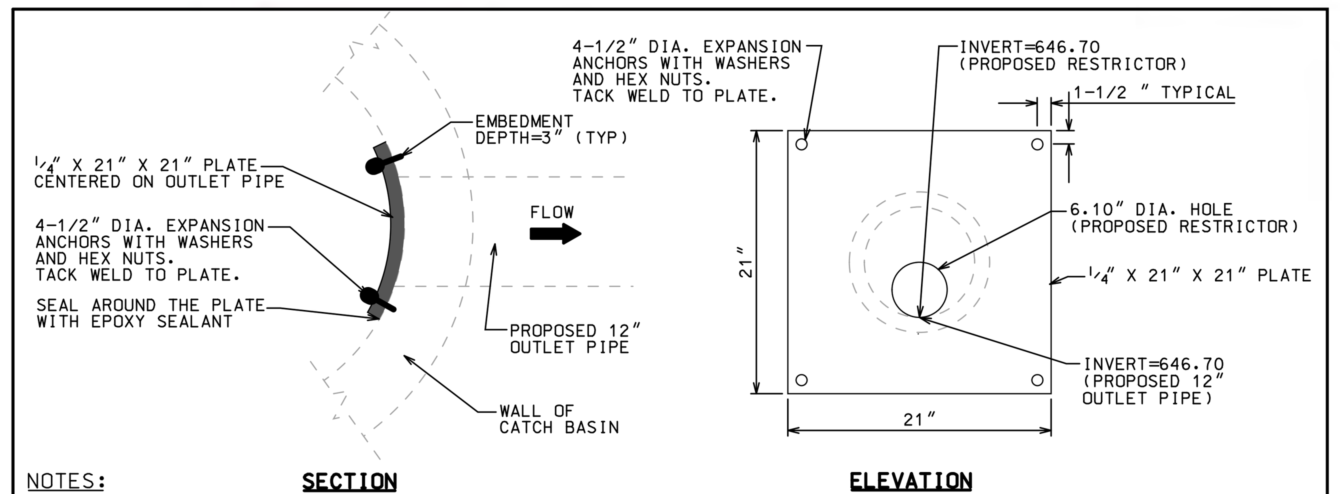

NOTES:

-THE RESTRICTOR PLATE AND FASTENERS SHALL BE FABRICATED IN STAINLESS STEEL OR DUCTILE IRON

-PLATE SHALL BE CURVED TO MATCH THE INSIDE RADIUS OF THE CATCH BASIN

CB-410 RESTRICTOR PLATE DETAIL

N.T.S.

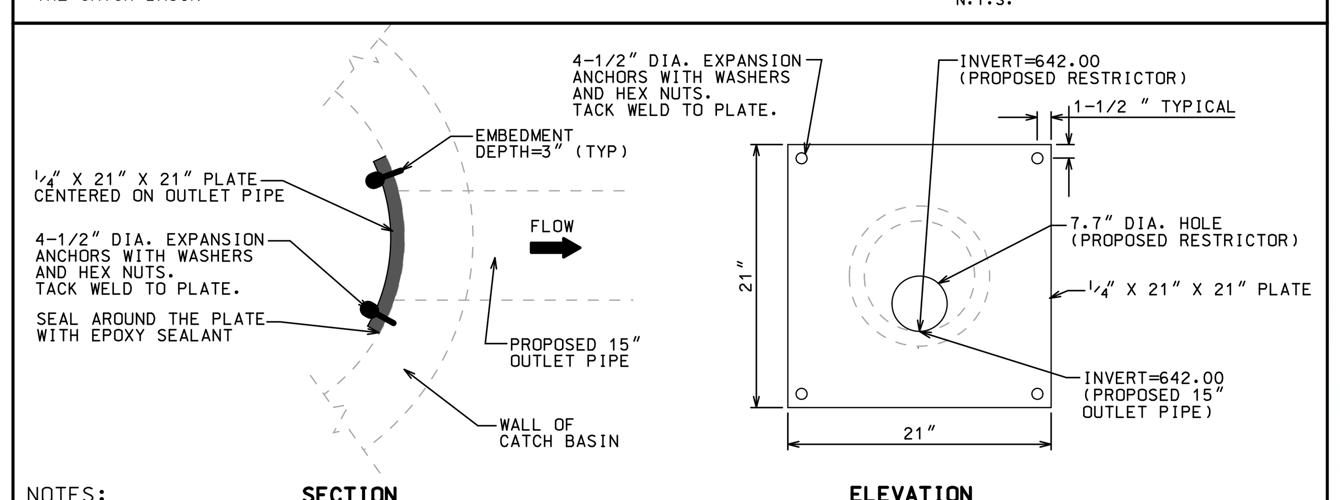

NOTES:

-THE RESTRICTOR PLATE AND FASTENERS SHALL BE FABRICATED IN STAINLESS STEEL OR DUCTILE IRON

-PLATE SHALL BE CURVED TO MATCH THE INSIDE RADIUS OF THE CATCH BASIN

CB-102 RESTRICTOR PLATE DETAIL

N.T.S.

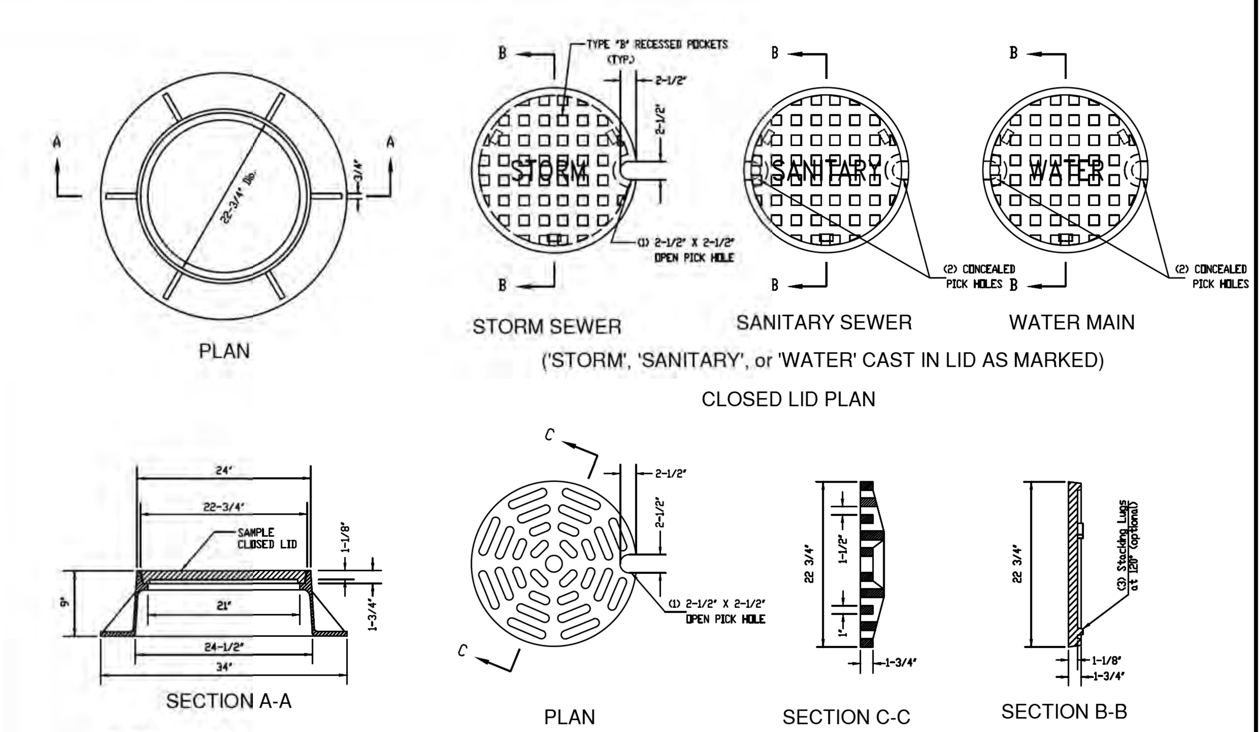

FURNISH HEAVY DUTY CASTING AS REQUIRED BY THE VILLAGE ENGINEER

VILLAGE OF WHEELING ENGINEERING DIVISION, 2 COMMUNITY BOULEVARD, WHEELING, IL 60090, WWW.WHEELINGIL.GOV

FRAME AND LID STANDARD

VILLAGE OF WHEELING SPECIFICATIONS AND DETAILS — FILE LOCATION: N:\ENGINEERING\STANDARDS\GENERAL

REVISIONS	
S.W.	2-24-00 AUTOCAD FILE
S.W.	9-19-01 PER COMMENTS
K.R.G.	9-11-06 AUTOCAD FILE

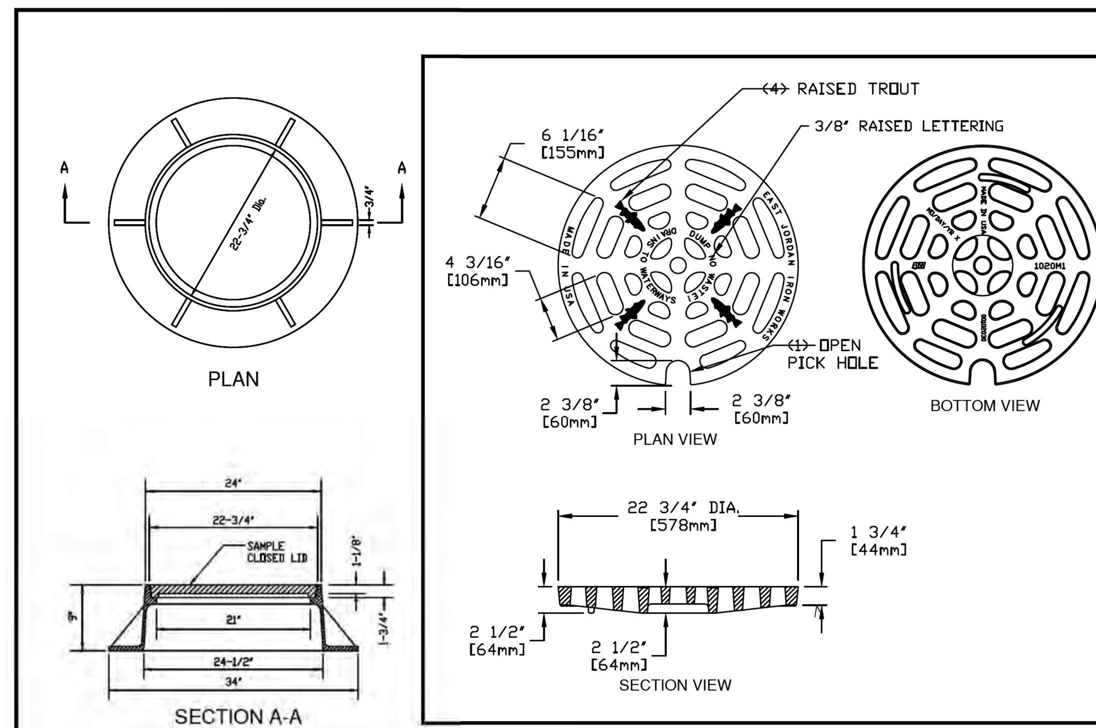

(*) EAST JORDAN IRON WORKS, INC. P.O. BOX 439 EAST JORDAN, MI. 49727 1-800-874-4100 FAX 231-536-4458

DRAWN TCL, DATE 09/26/02; APPROVED, DATE

CATCH BASIN GRATE

PRODUCT NO. (*) 00102030 DIPPED

CATALOG NO. (*) 1020M1

REF. PRODUCT DRAWING 102031

EST. WT. GRATE: 124 LBS (56 kg)

OPEN AREA 120 SQ. INCHES (774 SQ. cm)

MAT'L SPEC. GRATE - GRAY IRON ASTM A45 CL 35B

LOAD RATING EXTRA HEAVY DUTY

FURNISH HEAVY DUTY CASTING AS REQUIRED BY THE VILLAGE ENGINEER

(*) or NEENAH CATALOG R-2015 SHOP DRAWING NF-2015 T17

OPEN LID

VILLAGE OF WHEELING ENGINEERING DIVISION, 2 COMMUNITY BOULEVARD, WHEELING, IL 60090, WWW.WHEELINGIL.GOV

FRAME AND OPEN LID STORM MANHOLE STANDARD

VILLAGE OF WHEELING SPECIFICATIONS AND DETAILS — FILE LOCATION: N:\ENGINEERING\STANDARDS\STORM

REVISIONS	
S.W.	2-24-00 AUTOCAD FILE
S.W.	9-19-01 PER COMMENTS
S.W.	11-12-02 NPDES PHASE II
S.W.	02-07-03 ADDING NEENAH
K.R.G.	9-11-06 AUTOCAD FILE

NO.	DATE	REMARKS

NO.	DATE	REMARKS

DETAILS – 1

800 NORTHGATE PARKWAY
WHEELING, ILLINOIS

CONSULTING ENGINEERS
SITE DEVELOPMENT ENGINEERS
LAND SURVEYORS
9575 W. Higgins Road, Suite 700, Rosemont, Illinois 60018
Phone: (847) 696-4060 Fax: (847) 696-4065
SPACECO INC.

FILENAME: 1642_04_DET01

DATE: 09/16/2016

JOB NO. 1642.04

SHEET D1

NOTE:
1. THE VALVE SHALL HAVE MECHANICAL JOINTS
2. ALL FASTENER HARDWARE (i.e. NUTS, BOLTS, & WASHERS) ASSOCIATED WITH THIS VALVE SHALL BE STAINLESS STEEL
3. STEPS ARE NOT ALLOWED IN WATERMAIN VAULTS
4. THE VALVE SHALL BE RESTRAINED BY THRUST RESTRAINT WEDGE, RETAINER GLANDS MANUFACTURED WITH TORQUE LIMITING TWIST-OFF NUTS
5. VALVE SHALL BE FULL BODIED EPOXY COATED, NON-RISING STEM, RESILIENT WEDGE GATE VALVE
6. VALVE VAULT SHALL BE WATER-TIGHT

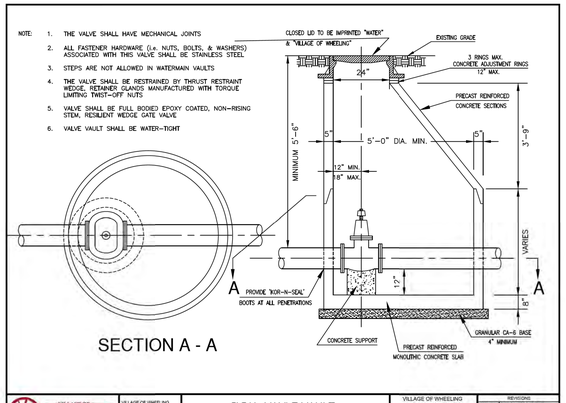

SECTION A - A

VILLAGE OF WHEELING ILLINOIS | VILLAGE OF WHEELING ENGINEERING DIVISION 2 COMMUNITY BOULEVARD WHEELING, IL 60090 WWW.WHEELINGIL.GOV | 5' DIA. VAVLE VAULT STANDARD | VILLAGE OF WHEELING SPECIFICATIONS AND DETAILS | N:\ENGINEERING\STANDARDS\WATER | REVISIONS: S.W. 8-24-00 AUTOCAD FILE; 4.R. 11-07-01 PER COMMENTS; K.S. 02-07-07 PER COMMENTS; K.K.C. 01-18-07 PER COMMENTS

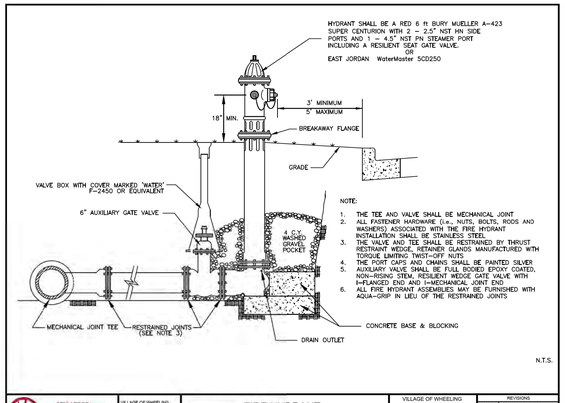

NOTE:
1. THE TEE AND VALVE SHALL BE MECHANICAL JOINT
2. ALL FASTENER HARDWARE (i.e., NUTS, BOLTS, RODS AND WASHERS) ASSOCIATED WITH THE FIRE HYDRANT INSTALLATION SHALL BE STAINLESS STEEL.
3. THE VALVE AND TEE SHALL BE RESTRAINED BY THRUST RESTRAINT WEDGE, RETAINER GLANDS MANUFACTURED WITH TORQUE LIMITING TWIST-OFF NUTS
4. THE PORT CAPS AND CHAINS SHALL BE PAINTED SILVER
5. AUXILIARY VALVE SHALL BE FULL BODIED EPOXY COATED, NON-RISING STEM, RESILIENT WEDGE GATE VALVE WITH I=FLANGED END AND I=MECHANICAL JOINT END
6. ALL FIRE HYDRANT ASSEMBLIES MAY BE FURNISHED WITH AQUA-GRIP IN LIEU OF THE RESTRAINED JOINTS

N.T.S.

VILLAGE OF WHEELING ILLINOIS | VILLAGE OF WHEELING ENGINEERING DIVISION 2 COMMUNITY BOULEVARD WHEELING, IL 60090 WWW.WHEELINGIL.GOV | FIRE HYDRANT INSTALLATION STANDARD | VILLAGE OF WHEELING SPECIFICATIONS AND DETAILS | N:\ENGINEERING\STANDARDS\WATER | REVISIONS: F.F. 11-08-98 ADD NOTES; S.R. 01-24-07 PER COMMENTS; S.C. 03-07-07 PER COMMENTS; E.R. 03-13-08 E.R.W. Fabrik/Hydrant

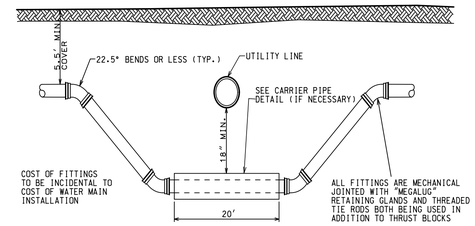

TO BE USED WHERE EXISTING UTILITY LINE CANNOT BE MOVED OR EXISTING WATER MAIN MUST BE RELOCATED TO ALLOW NEW UTILITY LINE TO BE CONSTRUCTED.

WATER MAIN OFF-SET DETAIL

NOT TO SCALE

CONCENTRIC CONE CAN BE USED INSTEAD OF ECCENTRIC CONE

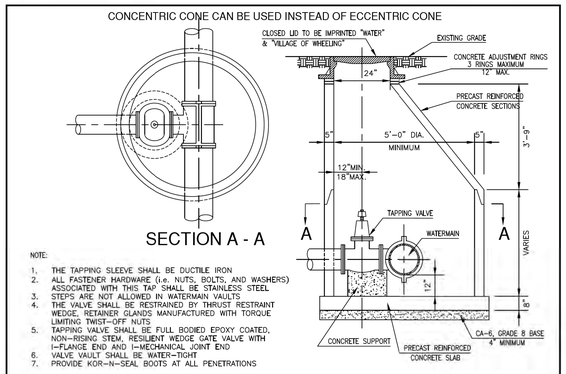

SECTION A - A

NOTE:
1. THE TAPPING SLEEVE SHALL BE DUCTILE IRON
2. ALL FASTENER HARDWARE (i.e. NUTS, BOLTS, AND WASHERS) ASSOCIATED WITH THIS TAP SHALL BE STAINLESS STEEL
3. STEPS ARE NOT ALLOWED IN WATERMAIN VAULTS
4. THE VALVE SHALL BE RESTRAINED BY THRUST RESTRAINT WEDGE, RETAINER GLANDS MANUFACTURED WITH TORQUE LIMITING TWIST-OFF NUTS
5. TAPPING VALVE SHALL BE FULL BODIED EPOXY COATED, NON-RISING STEM, RESILIENT WEDGE GATE VALVE WITH I=FLANGE END AND I=MECHANICAL JOINT END
6. VALVE VAULT SHALL BE WATER-TIGHT
7. PROVIDE KOR-N-SEAL BOOTS AT ALL PENETRATIONS

VILLAGE OF WHEELING ILLINOIS | VILLAGE OF WHEELING ENGINEERING DIVISION 2 COMMUNITY BOULEVARD WHEELING, IL 60090 WWW.WHEELINGIL.GOV | VALVE & TAPPING VALVE STANDARD | VILLAGE OF WHEELING SPECIFICATIONS AND DETAILS | N:\ENGINEERING\STANDARDS\WATER | REVISIONS: S.W. 8-12-00 AUTOCAD FILE; C.J.C. 03-07-07 PER COMMENTS; S.W. 08-15-08 CONCENTRIC CONE

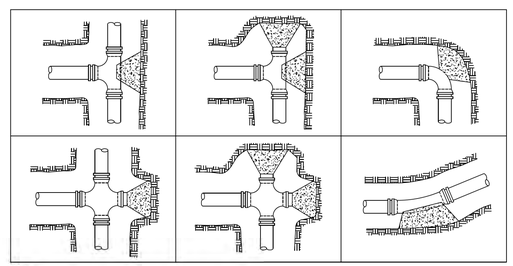

NOTE
1. ALL BLOCKING SHALL BE CONSTRUCTED WITH POURED CLASS X CONCRETE AGAINST UNDISTURBED VERTICAL EARTH FACE WITH A MINIMUM WIDTH OF 12 INCHES.
2. RESTRAINED JOINTS AND THRUST BLOCKS TO BE USED AT ALL BENDS, AT TEES AND AT CROSSES AS SHOWN ABOVE, OR AS REQUIRED PER THE VILLAGE ENGINEER.
3. THE FITTINGS SHALL BE MECHANICAL JOINT.
4. OTHER METHODS MAY BE USED AS AN ALTERNATIVE WHEN APPROVED BY THE VILLAGE ENGINEER.
5. ALL FASTENER HARDWARE (i.e. NUTS, BOLTS, AND WASHERS) ASSOCIATED WITH FITTINGS SHALL BE STAINLESS STEEL.
6. ALL FITTINGS SHALL BE RESTRAINED BY THRUST RESTRAINT WEDGE, RETAINER GLANDS MANUFACTURED WITH TORQUE LIMITING TWIST-OFF NUTS.

VILLAGE OF WHEELING ILLINOIS | VILLAGE OF WHEELING ENGINEERING DIVISION 2 COMMUNITY BOULEVARD WHEELING, IL 60090 WWW.WHEELINGIL.GOV | THRUST BLOCK STANDARD | VILLAGE OF WHEELING SPECIFICATIONS AND DETAILS | N:\ENGINEERING\STANDARDS\WATER | REVISIONS: S.W. 8-27-00 AUTOCAD FILE; K.R.S. 9-11-08 AUTOCAD FILE; C.J.C.

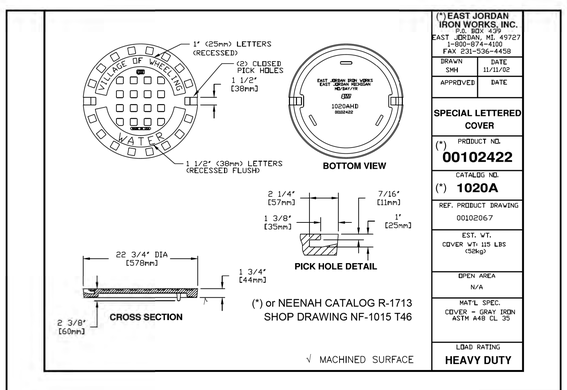

(*) EAST JORDAN IRON WORKS, INC.
P.O. BOX 439
EAST JORDAN, MI 49727
1-800-874-4100
FAX 231-536-4458

DRAWN SMH	DATE 11/11/02
APPROVED	DATE
SPECIAL LETTERED COVER	
(*) PRODUCT NO. 00102422	
CATALOG NO. (*) 1020A	
REF. PRODUCT DRAWING 00102067	
EST. WT. COVER WT: 115 LBS (52kg)	
OPEN AREA N/A	
MAT'L SPEC. COVER - GRAY IRON ASTM A48 CL 35	
LOAD RATING HEAVY DUTY	

VILLAGE OF WHEELING ILLINOIS | VILLAGE OF WHEELING ENGINEERING DIVISION 2 COMMUNITY BOULEVARD WHEELING, IL 60090 WWW.WHEELINGIL.GOV | FRAME AND CLOSED LID WATER MANHOLE STANDARD | VILLAGE OF WHEELING SPECIFICATIONS AND DETAILS | N:\ENGINEERING\STANDARDS\WATER | REVISIONS: S.W. 8-24-00 AUTOCAD FILE; S.W. 9-10-01 PER COMMENTS; S.W. 11-12-02 MODIFIED PHASE II; S.W. 02-07-03 ADDING NEENAH; C.J.C. 01-29-08 AUTOCAD FILE

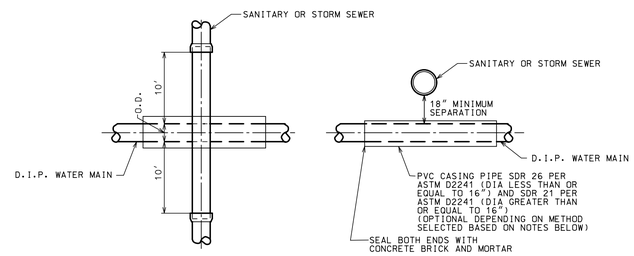

PLAN

SECTION

WATERMAIN DIA.	CASING PIPE DIA.
6"	12"
8"	16"
10"	18"
12"	18"

CONFLICTS OCCUR WHERE WATERMAINS PASS WITHIN 18" OVER OR PASS UNDER A SANITARY AND/OR STORM SEWER AND SHALL BE PROVIDED FOR AS FOLLOWS.

SANITARY SEWER CONFLICTS:

PROVIDE WATERMAIN EQUIVALENT PIPE (PRESSURE CLASS 350 D.I.P. OR PVC SDR 26 PER ASTM D2241) AND JOINTS FOR THE SANITARY SEWER 10' EITHER SIDE OF WATERMAIN CROSSING USING MISSION TYPE COUPLINGS TO MAKE THE TRANSITION BETWEEN THE WATERMAIN EQUIVALENT PIPE AND THE STANDARD PIPE. OR ENCASE THE WATERMAIN AS SHOWN ABOVE. REGARDLESS OF METHOD, THERE SHALL BE A MINIMUM 18" CLEARANCE BETWEEN TOP OF WATERMAIN AND THE BOTTOM OF THE SANITARY SEWER.

STORM SEWER CONFLICTS

PROVIDE STORM SEWER PIPE WITH O-RING GASKET JOINTS CONFORMING TO THE ASTM C-361 FOR 10 FT EITHER SIDE OF WATERMAIN CONFLICTS OR ENCASE THE WATERMAIN AS SHOWN ABOVE. REGARDLESS OF METHOD, THERE SHALL BE A MINIMUM 18" CLEARANCE BETWEEN TOP OF WATERMAIN AND THE BOTTOM OF THE STORM SEWER.

CAD-DTLS/WATER/E010.DTL

SEWER/WATER MAIN CROSSING

NOT TO SCALE NOT TO SCALE

NO.	DATE	REMARKS

NO.	DATE	REMARKS

DETAILS - 2

800 NORTHGATE PARKWAY
WHEELING, ILLINOIS

CONSULTING ENGINEERS
SITE DEVELOPMENT ENGINEERS
LAND SURVEYORS
9575 W. Higgins Road, Suite 700,
Rosemont, Illinois 60018
Phone: (847) 696-4060 Fax: (847) 696-4065
SPACECO INC.

FILENAME: 1642_04_DET02

DATE: 09/16/2016

JOB NO. 1642.04

SHEET D2

N:\DGN\1642\1642.04-hamilton.partners\ENG\1642_04_DET02.dgn Default User=randerson

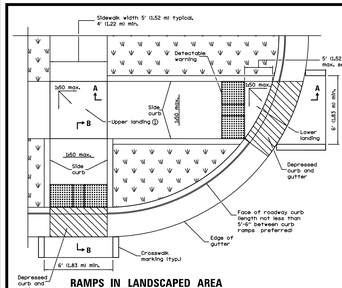

RAMPS IN LANDSCAPED AREA
SETBACK ≤ 5'

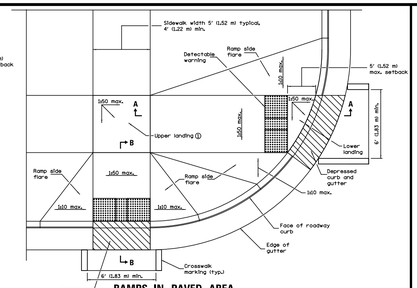

RAMPS IN PAVED AREA
SETBACK ≤ 5'

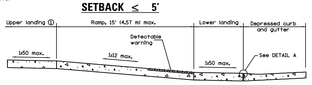

SECTION A–A
① Upper landing not required for ramp slopes flatter than 1:20.

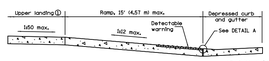

SECTION B–B
① Upper landing not required for ramp slopes flatter than 1:20.

DETAIL A

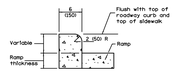

SIDE CURB DETAIL

GENERAL NOTES

All slope ratios are expressed as units of vertical displacement to units of horizontal displacement (V:H).

Where ≥50 maximum slope is shown, 1:64 is preferred.

See Standard 606001 for details of depressed curb adjacent to curb ramp.

All dimensions are in inches (millimeters) unless otherwise shown.

PERPENDICULAR CURB RAMPS FOR SIDEWALKS
(Sheet 1 of 2)

STANDARD 424001-07

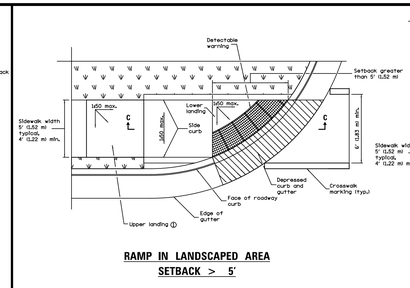

RAMP IN LANDSCAPED AREA
SETBACK > 5'

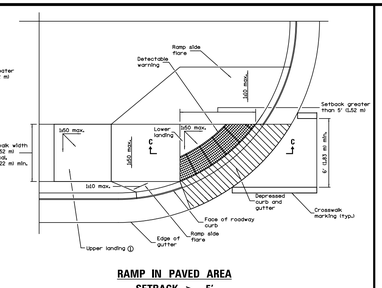

RAMP IN PAVED AREA
SETBACK > 5'

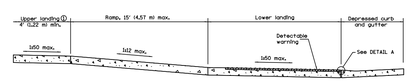

SECTION C–C
① Upper landing not required for ramp slopes flatter than 1:20.

PERPENDICULAR CURB RAMPS FOR SIDEWALKS
(Sheet 2 of 2)

STANDARD 424001-07

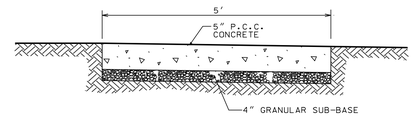

SIDEWALK DETAIL
NOT TO SCALE

NOTES:

1. CONCRETE SHALL BE IDOT CLASS SI.
2. MINIMUM SIDEWALK THICKNESS SHALL BE 5".
3. MAXIMUM TRANSVERSE SLOPE SHALL BE 1/4 "/ft. (2%) TYPICAL.
4. CONTRACTION JOINTS SHALL BE CONSTRUCTED AT A SPACING OF 5'. 3/4 " EXPANSION JOINT SHALL BE CONSTRUCTED AT A MAXIMUM SPACING OF 50'.
5. AGGREGATE SUB-BASE COURSE SHALL BE MECHANICALLY COMPACTED.
6. ALL SIDEWALKS SHALL BE PROMPTLY BACKFILLED AND PROTECTED FROM DAMAGE.

ST-SW/F016.DGN

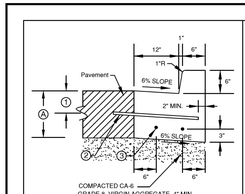

COMBINATION CURB & GUTTER TYPE B-6.12

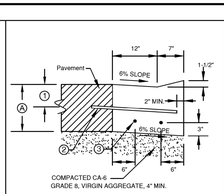

COMBINATION DEPRESSED CURB & GUTTER

Ⓐ PAVEMENT DEPTH OR 9" MIN.

① TO BE CENTERED OR SET AS REQUIRED IN FIELD.

② 1/2" DIA. STEEL TIE BAR AT 2'-6" CENTERED WHEN PAVEMENT IS CONCRETE. OMIT WHEN ADJACENT PAVEMENT IS FLEXIBLE.

③ 5/8" DIA. STEEL REBAR CONTINUOUS (TYPICAL).

NOTES:

PROVIDE DEPRESSED CURBS AT DRIVEWAYS, CROSSWALKS, AND SIDEWALKS, ETC.

ALL CONCRETE SHALL HAVE 4,000 P.S.I. COMPRESSIVE STRENGTH AT 28 DAYS.

ALL MATERIALS AND CONSTRUCTION SHALL CONFORM TO I.D.O.T. STANDARD 606001-01 UNLESS OTHERWISE NOTED HEREIN.

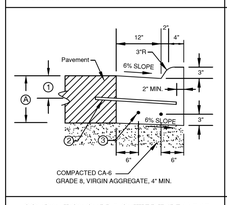

COMBINATION CURB & GUTTER TYPE M-3.12

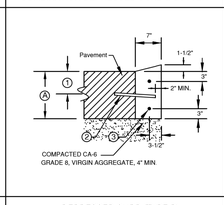

DEPRESSED CURB (TYPE B)

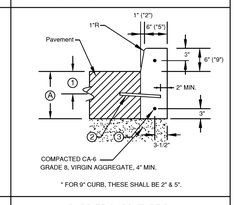

* FOR 9" CURB, THESE SHALL BE 2" & 5".

BARRIER CURB (TYPE B)

VILLAGE OF WHEELING ILLINOIS

VILLAGE OF WHEELING
ENGINEERING DIVISION
2 COMMUNITY BOULEVARD
WHEELING, IL 60090
WWW.WHEELINGIL.GOV

CURB AND GUTTER STANDARD

VILLAGE OF WHEELING SPECIFICATIONS AND DETAILS	REVISIONS	
	S.W.	06-16-00 AUTOCAD FILE
FILE LOCATION	C.J.C.	11-27-07 AUTOCAD FILE
N:\ENGINEERING\STANDARDS\ROADWAY		

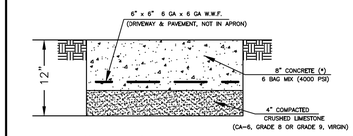

(*) RECOMMEND 10" IN TRUCK TRAFFIC & LOADING AREAS

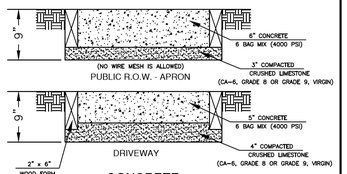

CONCRETE

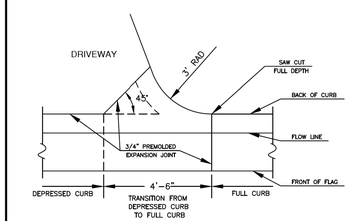

COMMERCIAL DRIVEWAY

SEE V.O.W. PUBLIC SIDEWALK & SIDEWALK RAMP STANDARD

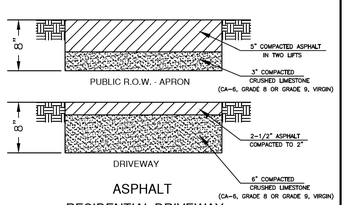

ASPHALT RESIDENTIAL DRIVEWAY

VILLAGE OF WHEELING ILLINOIS

VILLAGE OF WHEELING
ENGINEERING DIVISION
2 COMMUNITY BOULEVARD
WHEELING, IL 60090
WWW.WHEELINGIL.GOV

DRIVEWAY STANDARD

VILLAGE OF WHEELING SPECIFICATIONS AND DETAILS	REVISIONS	
	S.W.	02-09-06 REVISED PER RG
FILE LOCATION	C.J.C.	11-27-07 AUTOCAD FILE
N:\ENGINEERING\STANDARDS\ROADWAY	K.R.G.	11-17-08 APRON ADD. THICK
	K.R.G.	03-29-10 REVISED GRADE 9

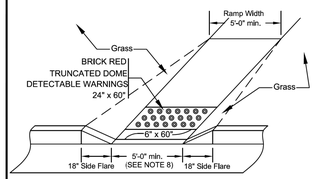

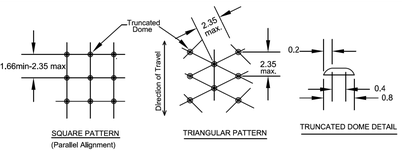

DETECTABLE WARNINGS DETAIL
All dimensions are in inches unless otherwise shown

SIDEWALK RAMP

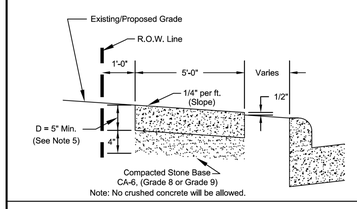

PUBLIC SIDEWALK

NOTE:

1. TO BE FORMED WITH 2" x 6" BOARDS OR BY 5" WIDE STEEL FORMS.
2. TOOLED JOINTS SHALL BE 1/2" AT 5' CENTERS.
3. EXPANSION JOINTS SHALL BE 3/4" THICK X 5 " WIDE BITUMINOUS IMPREGNATED FIBERBOARD AT 30' CENTERS, AT DRIVEWAYS AND OTHER CONCRETE JOINTS.
4. PROVIDE BROOM FINISH EXCEPT AT TRUNCATED DOME.
5. D = 6" AT RESIDENTIAL DRIVEWAY D = 8" AT COMMERCIAL/INDUSTRIAL DRIVEWAYS
6. SIDEWALK RAMPS AT DRIVEWAYS SHALL BE BUILT PER THE VILLAGE STANDARD.
7. THE CONCRETE SHALL BE A 6 BAG MIX AND SHALL NOT CONTAIN CHLORIDE OR FLY ASH. THE COMPRESSIVE STRENGTH SHALL MEET OR EXCEED I.D.O.T.'S REQUIREMENTS FOR "5F" CONCRETE. (MINIMUM 3500 PSI @ 14 DAYS)
8. PROVIDE DEPRESSED CURBS AT ALL WALKS, 5' MINIMUM WIDTH ON DEPRESSION.
9. ALL SIDEWALKS, CURB/GUTTER AND PAVEMENT TO BE SAW-CUT AS REQUIRED.
10. MAXIMUM SLOPE OF RAMP NOT TO EXCEED 8%.
11. DRIVEWAY APRON REMOVAL & REPLACEMENT SHALL INCLUDE THE INSTALLATION OF A TRUNCATED DOME HANDICAPPED SIDEWALK RAMP ON BOTH SIDES OF THE APRON UNLESS OTHERWISE APPROVED BY THE VILLAGE ENGINEER.
12. TRUNCATED DOME CONSTRUCTION FOR DETECTABLE WARNINGS SHALL BE ARMOR-TILE TACTILE SYSTEMS FEDERAL #22144 OR TUFTILE DETECTABLE WARNING TILES, BRICK RED AND SHALL MEET THE REQUIREMENTS OF ALL APPLICABLE I.D.O.T. STANDARDS. NO SURFACE MOUNT PANELS ALLOWED.

VILLAGE OF WHEELING ILLINOIS

VILLAGE OF WHEELING
ENGINEERING DIVISION
2 COMMUNITY BOULEVARD
WHEELING, IL 60090
WWW.WHEELINGIL.GOV

PUBLIC SIDEWALK STANDARDS

VILLAGE OF WHEELING SPECIFICATIONS AND DETAILS	REVISIONS	
	K.R.G.	9-11-06 AS PER T.W.M.
FILE LOCATION	C.J.C.	11-27-07 AUTOCAD FILE
N:\ENGINEERING\STANDARDS\ROADWAY	C.J.C.	08-08-08 AS PER K.R.G.
	L.R.	04-04-14 AS PER J.T.

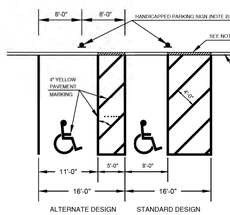

PARKING STALL

PARKING STALL NOTES

1. DEPRESSED CURB OR CURB RAMP REQUIRED WITH ACCESS TO A 9' WIDE PAVED SURFACE.
2. SIGN MOUNTED NO MORE THAN 5'-0" HORIZONTALLY FROM THE FRONT OF THE PARKING SPACE.

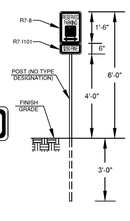

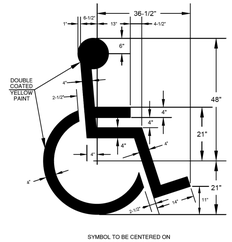

SYMBOL TO BE CENTERED ON WIDTH OF PARKING STALL

PAINTED SYMBOL

MUTCD R7-8
12" x 18"

MUTCD R7-1101
12" x 6"

HANDICAPPED PARKING SIGN

VILLAGE OF WHEELING ILLINOIS

VILLAGE OF WHEELING
ENGINEERING DIVISION
2 COMMUNITY BOULEVARD
WHEELING, IL 60090
WWW.WHEELINGIL.GOV

HANDICAPPED PARKING STANDARD

VILLAGE OF WHEELING SPECIFICATIONS AND DETAILS	REVISIONS	
	S.W.	3-10-00 AUTOCAD FILE
FILE LOCATION	S.W.	5-23-06 AS PER COMMENTS
N:\ENGINEERING\STANDARDS\ROADWAY	C.J.C.	11-27-07 AUTOCAD FILE

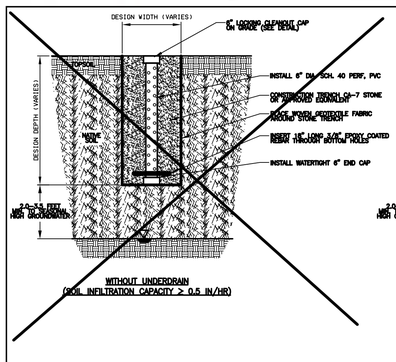

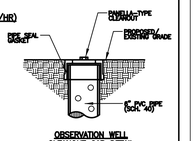

OBSERVATION WELL CLEANOUT CAP DETAIL

NOTES:
1) ONE OBSERVATION WELL SHALL BE INSTALLED PER 40,000 SQ. FT. OF SURFACE AREA.
2) PERFORATIONS SHALL BE 3/8" CIRCULAR HOLES, 4" ON CENTER, 90° AROUND PIPE.
3) OBSERVATION WELL FOR BIORETENTION FACILITIES SHALL EXTEND 6"-12" ABOVE GRADE AND CONTAIN AN OVERFLOW GRATE INSTEAD OF LOCKING CAP.
4) PIPES/FITTINGS SHALL BE SCHEDULE 40 PVC OR HIGHER QUALITY, 6" DIAMETER MINIMUM.

NOT TO SCALE

TECHNICAL GUIDANCE MANUAL	7/1/15
TYPICAL OBSERVATION WELL DETAIL	STD. DWG. NO.: 8
	PAGE NO.: 9

NO.	DATE	REMARKS

NO.	DATE	REMARKS

DETAILS – 3

800 NORTHGATE PARKWAY
WHEELING, ILLINOIS

CONSULTING ENGINEERS
SITE DEVELOPMENT ENGINEERS
LAND SURVEYORS
9575 W. Higgins Road, Suite 700,
Rosemont, Illinois 60018
Phone: (847) 696-4060 Fax: (847) 696-4065
SPACECO INC.

FILENAME: 1642_04_DET03

DATE: 09/16/2016

JOB NO. 1642.04

SHEET
D3
20 OF 22

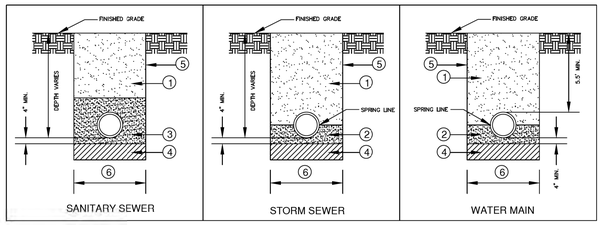

NOTES:

1. BACKFILL & COMPACT GRANULAR TRENCH BACKFILL (CA-6, GRADE 8 OR APPROVED EQUAL) UNDER STREET PAVEMENT, DRIVEWAYS, AND SIDEWALK EXCAVATED MATERIAL MAY BE USED IN NON-PAVED AREAS
2. CA-11 OR CA-13 STONE OR OTHER APPROVED SELECT BACKFILL. TAMPED INTO PLACE TO SPRING LINE OF PIPE.
3. CA-11 OR CA-13 STONE OR OTHER APPROVED SELECT BACKFILL. TAMPED TO 12" MINIMUM ABOVE TOP OF PIPE.
4. IF ENCOUNTERED, REMOVE UNSUITABLE MATERIALS AND REPLACE WITH 4" STONE AS DIRECTED BY THE TESTING AGENCY OR THE VILLAGE ENGINEER
5. TRENCH SIDES TO BE SLOPED OR SHEETED/SHORED IN ACCORDANCE WITH OSHA REQUIREMENTS.
6. MAXIMUM TRENCH WIDTH = 18" (1'-6") + O.D. WHEN TRENCH < 5 FEET
   = 36" (3'-0") + O.D. WHEN TRENCH > 5 FEET

VILLAGE OF WHEELING ILLINOIS

VILLAGE OF WHEELING
ENGINEERING DIVISION
2 COMMUNITY BOULEVARD
WHEELING, IL 60090
WWW.WHEELINGIL.GOV

TRENCH BACKFILL STANDARD

VILLAGE OF WHEELING SPECIFICATIONS AND DETAILS	REVISIONS	
	S.W.	8-7-00 AUTOCAD FILE
FILE LOCATION	S.W.	9-18-01 PER COMMENTS
N:\ENGINEERING\STANDARDS\ GENERAL	S.W.	11-19-04 NO POLY WRAP
	C.J.C.	01-20-06 AUTOCAD FILE

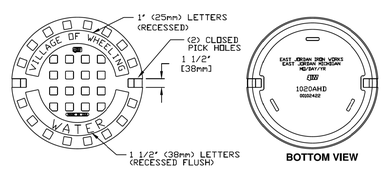

(*) or NEENAH CATALOG R-1713
SHOP DRAWING NF-1015 T46

(*) EAST JORDAN IRON WORKS, INC.
P.O. BOX 439
EAST JORDAN, MI 49727
1-800-874-4100
FAX 231-536-4458

DRAWN	DATE
SMH	11/11/02
APPROVED	DATE

SPECIAL LETTERED COVER

(*) PRODUCT NO. **00102422**

CATALOG NO. (*) **1020A**

REF. PRODUCT DRAWING: 00102067

EST. WT.: COVER WT: 115 LBS (52kg)

OPEN AREA: N/A

MAT'L SPEC.: COVER - GRAY IRON ASTM A48 CL 35

LOAD RATING: **HEAVY DUTY**

VILLAGE OF WHEELING ILLINOIS

VILLAGE OF WHEELING
ENGINEERING DIVISION
2 COMMUNITY BOULEVARD
WHEELING, IL 60090
WWW.WHEELINGIL.GOV

FRAME AND CLOSED LID WATER MANHOLE STANDARD

VILLAGE OF WHEELING SPECIFICATIONS AND DETAILS	REVISIONS	
	S.W.	2-24-00 AUTOCAD FILE
	S.W.	9-18-01 PER COMMENTS
FILE LOCATION	S.W.	11-12-02 NPDES PHASE II
N:\ENGINEERING\STANDARDS\ WATER	S.W.	02-07-03 ADDING NEENAH
	C.J.C.	01-20-06 AUTOCAD FILE

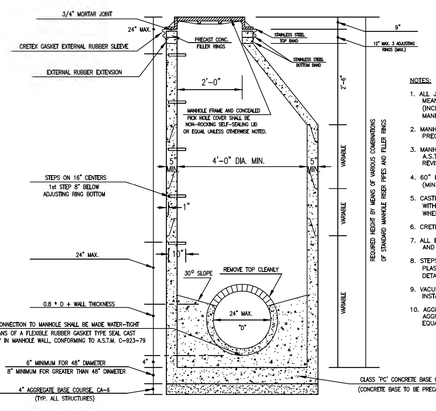

NOTES:

1. ALL JOINTS SHALL BE SEALED WATER-TIGHT BY MEANS OF E-Z STIK, KENT-SEAL, OR EQUAL (INCLUDING CAST IRON FRAME TO CONCRETE MANHOLE STRUCTURE)
2. MANHOLE STRUCTURE TO BE CONSTRUCTED OF PRECAST REINFORCED CONCRETE
3. MANHOLE CONSTRUCTION SHALL CONFORM TO A.S.T.M. DESIGNATION C478-80 OR LATER REVISION
4. 60" I.D. MANHOLE WALLS SHALL BE 6" THICK (MIN.)
5. CASTING MANHOLE COVER SHALL BE FURNISHED WITH THE WORD "SANITARY" & "VILLAGE OF WHEELING" CAST IN LID
6. CRETEX TYPE SEAL ON ALL SANITARY MANHOLES
7. ALL EXISTING STRUCTURES TO BE MACHINE CORED AND BOOTED
8. STEPS TO BE MADE OF COPOLYMER PROPYLENE PLASTIC, A.S.T.M. C-478M (SEE STORM MANHOLE DETAIL)
9. VACUUM TEST REQUIRED ON ALL NEW MANHOLE INSTALLATIONS
10. AGGREGATE BASE COURSE SHALL BE VIRGIN AGGREGATE OR VILLAGE ENGINEER APPROVED EQUAL

VILLAGE OF WHEELING ILLINOIS

VILLAGE OF WHEELING
ENGINEERING DIVISION
2 COMMUNITY BOULEVARD
WHEELING, IL 60090
WWW.WHEELINGIL.GOV

SANITARY MANHOLE STANDARD

VILLAGE OF WHEELING SPECIFICATIONS AND DETAILS	REVISIONS	
	S.W.	03-03-00 AUTOCAD FILE
FILE LOCATION	S.W.	02-27-03 AS PER COMMENTS
N:\ENGINEERING\STANDARDS\ SANITARY	P.F.	06-16-06 AS PER COMMENTS
	C.J.C.	11-27-07 AUTOCAD FILE

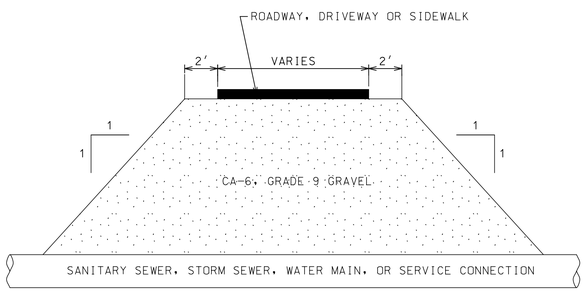

TRENCH BACKFILL LIMITS

NOT TO SCALE

NO.	DATE	REMARKS

NO.	DATE	REMARKS

DETAILS - 4

800 NORTHGATE PARKWAY
WHEELING, ILLINOIS

CONSULTING ENGINEERS
SITE DEVELOPMENT ENGINEERS
LAND SURVEYORS
9575 W. Higgins Road, Suite 700,
Rosemont, Illinois 60018
Phone: (847) 696-4060 Fax: (847) 696-4065
SPACECO INC.

FILENAME: 1642_04_DET04

DATE: 09/16/2016

JOB NO. 1642.04

SHEET **D4**
21 OF 22

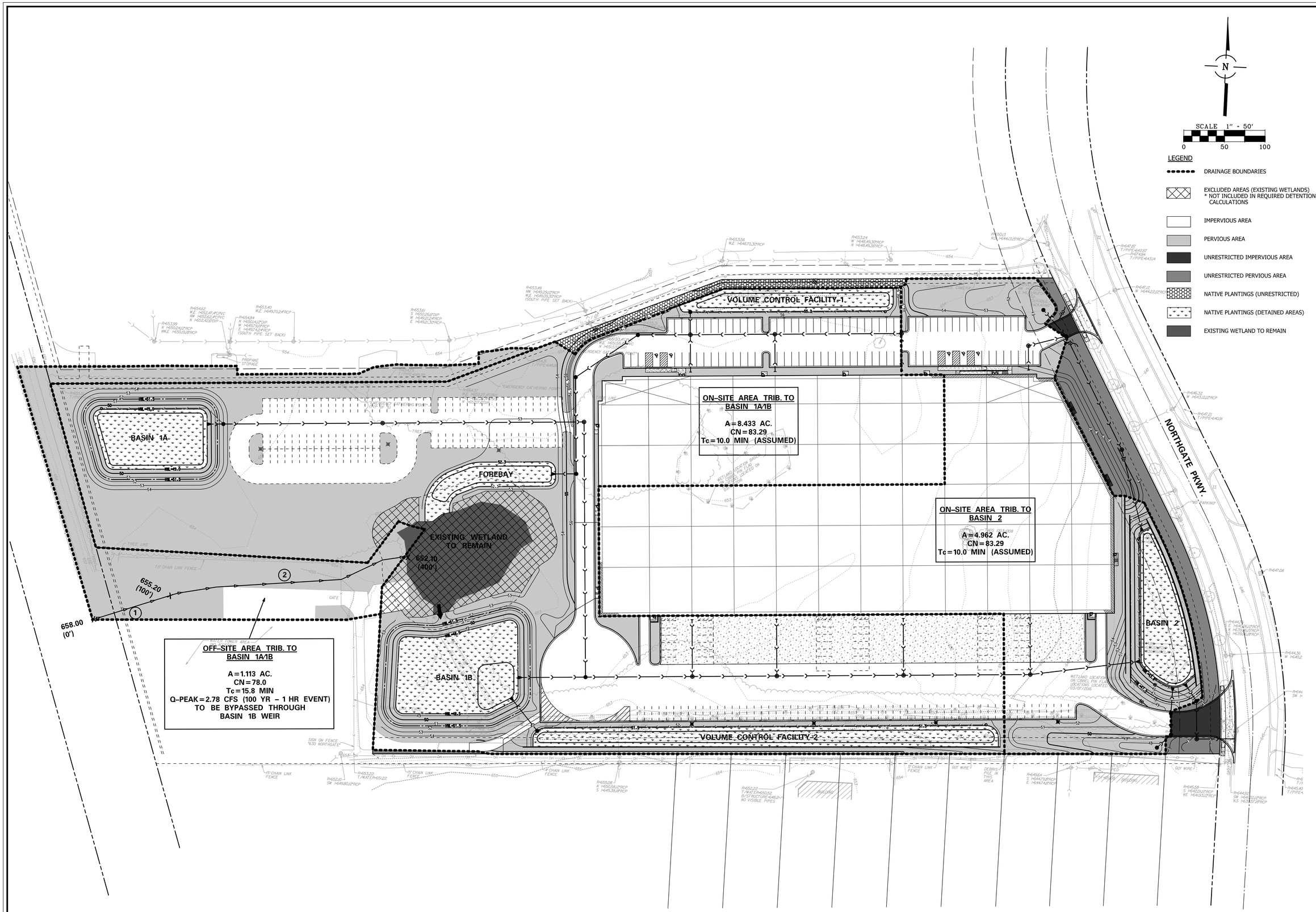

NO.	DATE	REMARKS

NO.	DATE	REMARKS

PROPOSED DRAINAGE PLAN

800 NORTHGATE PARKWAY
WHEELING, ILLINOIS

CONSULTING ENGINEERS
SITE DEVELOPMENT ENGINEERS
LAND SURVEYORS
9575 W. Higgins Road, Suite 700,
Rosemont, Illinois 60018
Phone: (847) 696-4060 Fax: (847) 696-4065
SPACECO INC.

FILENAME: 1642.04PDP.DGN

DATE: 09/16/2016

JOB NO. 1642.04

SHEET
PDP
22 OF 22

N:\DGN\1642\1642.04-hamilton.partners\ENG\1642.04PDP.dgn Default User=randerson

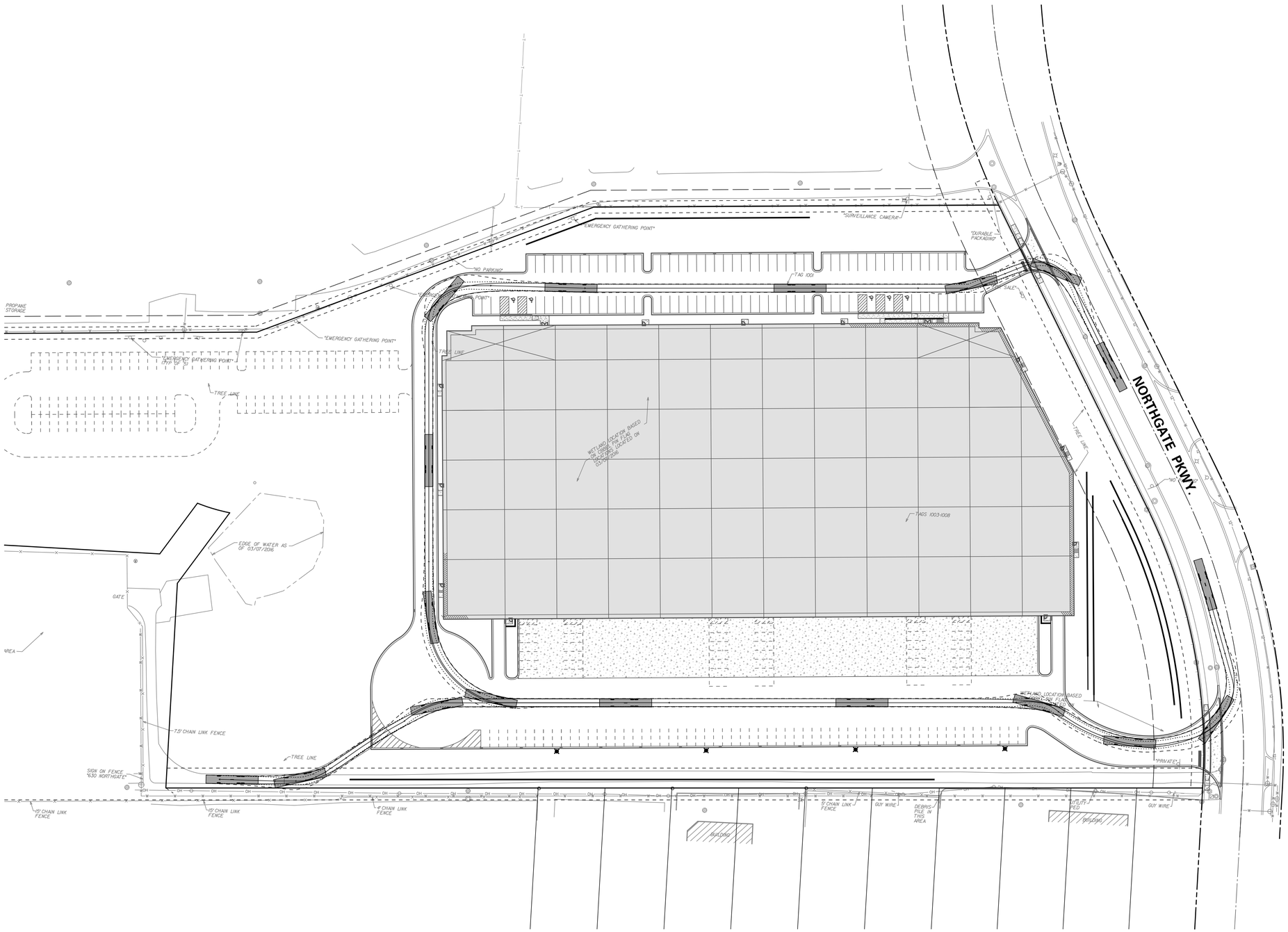

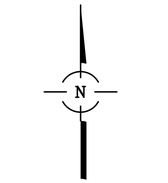

VEHICLE ENVELOPES

- FRONT TIRE PATH
- REAR TIRE PATH
- VEHICLE BODY ENVELOPE

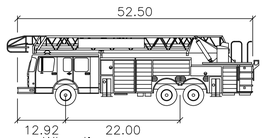

Wheeling Fire Truck

	feet
Width	: 8.33
Track	: 7.83
Lock to Lock Time	: 6.0
Steering Angle	: 28.9

NO.	DATE	REMARKS

NO.	DATE	REMARKS

FIRE TRUCK TURNING EXHIBIT

800 NORTHGATE PARKWAY
WHEELING, ILLINOIS

CONSULTING ENGINEERS
SITE DEVELOPMENT ENGINEERS
LAND SURVEYORS
9575 W. Higgins Road, Suite 700,
Rosemont, Illinois 60018
Phone: (847) 696-4060 Fax: (847) 696-4065
SPACECO INC.

FILENAME: 1642_04EXH-AUTOTURN

DATE: 09/16/2016

JOB NO. 1642.04

SHEET AT1
1 OF 1

Exhibit received September 21, 2016

N:\DGN\1642\1642.04-hamilton.partners\EXHIBITS\1642_04EXH-AUTOTURN.dgn Default User=sjohnson

A.L.T.A. \N.S.P.S. LAND TITLE SURVEY

PROPERTY DESCRIPTION (PER TITLE COMMITMENT):

LOT 2 OF JOHNSON'S LAKE-COOK SUBDIVISION BEING A SUBDIVISION OF PART OF THE NORTHEAST QUARTER OF SECTION 3, TOWNSHIP 42 NORTH, RANGE 11, EAST OF THE THIRD PRINCIPAL MERIDIAN, ACCORDING TO THE PLAT THEREOF RECORDED DECEMBER 26, 1986 AS DOCUMENT NUMBER 86619027, IN COOK COUNTY ILLINOIS.

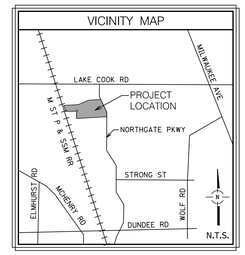

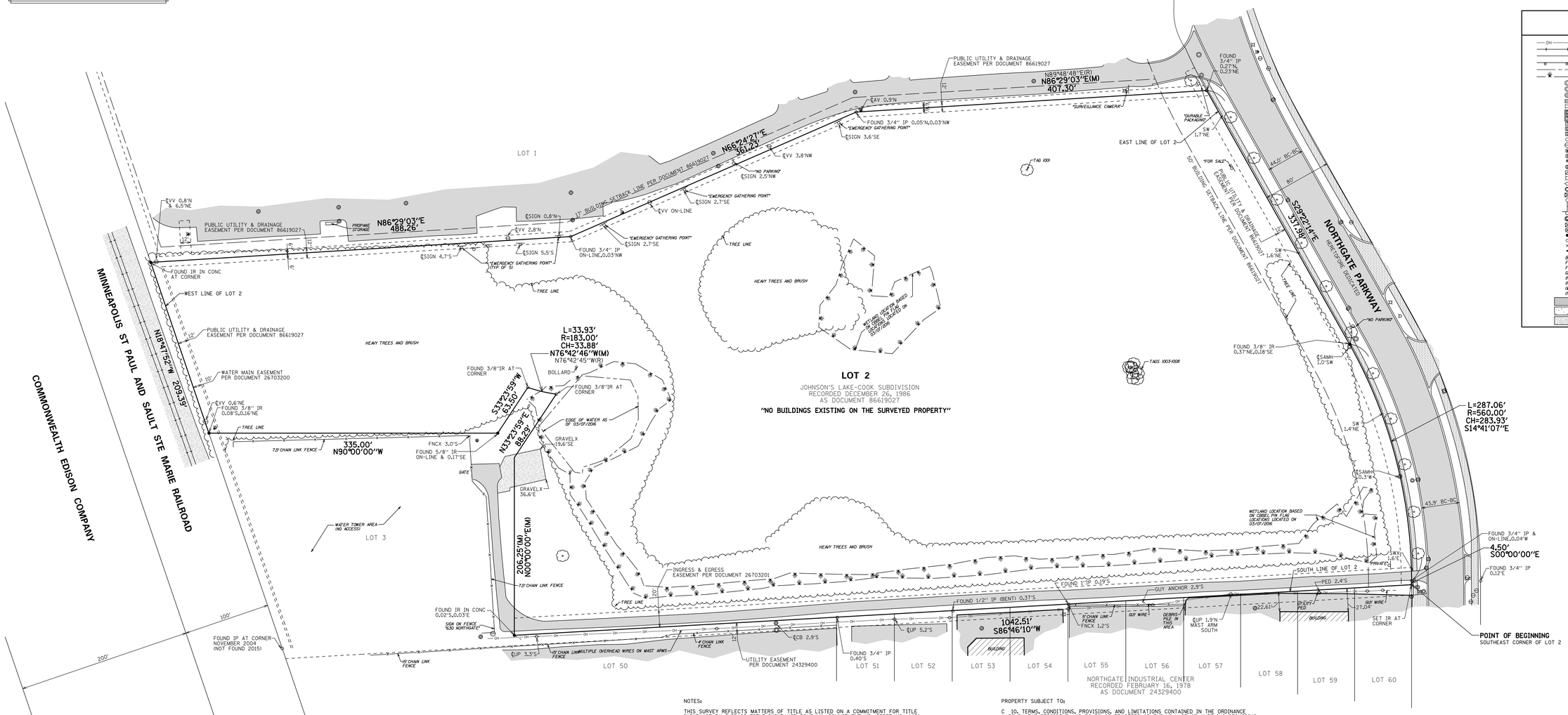

NOTES:

THIS SURVEY REFLECTS MATTERS OF TITLE AS LISTED ON A COMMITMENT FOR TITLE INSURANCE BY CHICAGO TITLE INSURANCE COMPANY, COMMITMENT NO./ORDER NO.: 1401 0089784B1 D1 WITH EFFECTIVE DATE: MAY 24, 2016.

UNDERGROUND UTILITIES ARE SHOWN BY USING PHYSICAL EVIDENCE FOUND ON THE SURFACE AND/OR FROM UTILITY COMPANY FIELD STAKES, AND/OR ENGINEERING DESIGN PLANS. THEREFORE, THEIR LOCATIONS ARE APPROXIMATE AND SUSPECTED AND MAY NOT BE COMPLETELY ACCURATE. FOR MORE ACCURATE LOCATION, FIELD EXCAVATE. OTHER UTILITIES NOT SHOWN MAY EXIST. NO UNDERGROUND UTILITIES WERE LOCATED. BEFORE DIGGING CALL J.U.L.I.E. AT 1-800-892-0123.

ALL DIMENSIONS ARE IN FEET AND DECIMAL PARTS THEREOF. NO DISTANCES OR ANGLES SHOWN HEREON MAY BE ASSUMED BY SCALING.

THIS PROFESSIONAL SERVICE CONFORMS TO THE CURRENT ILLINOIS MINIMUM STANDARDS FOR A BOUNDARY SURVEY.

SPACECO, INC IS AN ILLINOIS PROFESSIONAL DESIGN FIRM REGISTERED UNDER LICENSE NUMBER 184-001157.

TAX P.I.N. (PER TITLE COMMITMENT):
03-03-200-026-0000

ADDRESS (PER COOK COUNTY GIS):
800 NORTHGATE PARKWAY
WHEELING, ILLINOIS 60090
(TABLE A ITEM 2)

BASED UPON A REVIEW OF THE FEDERAL EMERGENCY MANAGEMENT AGENCY (FEMA) FLOOD INSURANCE RATE MAP (FIRM) MAP NUMBER 17031C0068J MAP REVISED AUGUST 19, 2008, IT IS OUR CONSIDERED OPINION THAT THIS PROPERTY LIES IN ZONE X (UNSHADED) -AREAS DETERMINED TO BE OUTSIDE THE 0.2% ANNUAL CHANCE FLOOD PLAIN AS IDENTIFIED BY SAID F.I.R.M. MAP.
(TABLE A ITEM 3)

PROPERTY SURVEYED CONTAINS 607,428 SQUARE FEET, OR 13.945 ACRES, MORE OR LESS.
(TABLE A ITEM 4)

THE CURRENT ZONING FOR THE SURVEYED PROPERTY IS I-3 GENERAL INDUSTRIAL BASED ON THE OFFICIAL ZONING MAP OF THE VILLAGE OF WHEELING, MAP LAST UPDATED OCTOBER 26, 2005.
(TABLE A ITEM 6A)

THERE IS NO OBSERVABLE EVIDENCE OF EARTH MOVING WORK, BUILDING CONSTRUCTION OR BUILDING ADDITIONS WITHIN RECENT MONTHS.
(TABLE A ITEM 16)

THERE IS NO OBSERVABLE EVIDENCE OF THE SURVEYED SITE USE AS A SOLID WASTE DUMP, SUMP OR SANITARY LANDFILL.

THE RECORD DISTANCES AND BEARINGS OF LOT 2 FAIL TO FORM A CLOSED FIGURE, DEVIATING 23.7 FEET IN THE NORTH-SOUTH DIRECTION AND 10.9 FEET IN THE EAST-WEST DIRECTION.

PROPERTY SUBJECT TO:

C 10. TERMS, CONDITIONS, PROVISIONS, AND LIMITATIONS CONTAINED IN THE ORDINANCE MADE BY THE PRESIDENT AND BOARD OF TRUSTEES OF THE VILLAGE OF WHEELING REGARDING THE DEDICATION OF NORTHGATE PARKWAY RECORDED JANUARY 10, 1979 AS DOCUMENT 24797355.
(SURVEYOR'S NOTE: THIS EXCEPTION AFFECTS THE SURVEYED PROPERTY BUT IS NOT A PLOTTABLE ITEM. SEE DOCUMENT FOR DETAILS.)

D 11. GRANT OF EASEMENT RECORDED JULY 26, 1983 AS DOCUMENT 26703200 AND MADE BY WILLIAM R. JOHNSON TO THE VILLAGE OF WHEELING, A MUNICIPAL CORPORATION OF COOK COUNTY, ILLINOIS, SAID PERPETUAL EASEMENT IS FOR THE INSTALLATION, CONSTRUCTION, USE, REPAIR AND MAINTENANCE OF A WATER MAIN AND RIGHT TO ENTER UPON THE EASEMENT, UNDER, OVER AND ACROSS THE WESTERLY 10 FEET OF THE LAND.
(SURVEYOR'S NOTE: THIS EXCEPTION AFFECTS THE SURVEYED PROPERTY, AND IS SHOWN HEREON.)

E 12. GRANT OF EASEMENT FOR INGRESS AND EGRESS RECORDED JULY 26, 1983 AS DOCUMENT 26703201 MADE BY WILLIAM R. JOHNSON TO THE VILLAGE OF WHEELING, A MUNICIPAL CORPORATION OF COOK COUNTY, ILLINOIS, OVER THE SOUTH 20 FEET OF THE LAND.
(SURVEYOR'S NOTE: THIS EXCEPTION AFFECTS THE SURVEYED PROPERTY, AND IS SHOWN HEREON.)

F 13. A 12 FOOT PUBLIC UTILITY AND DRAINAGE EASEMENT OVER THE WESTERLY, NORTHERLY AND EASTERLY LINES OF THE LAND AS SHOWN ON PLAT OF JOHNSON'S LAKE-COOK SUBDIVISION RECORDED DECEMBER 26, 1986 AS DOCUMENT 86619027.
(SURVEYOR'S NOTE: THIS EXCEPTION AFFECTS THE SURVEYED PROPERTY, AND IS SHOWN HEREON.)

G 14. A 50 FOOT BUILDING SETBACK LINE AS DEPICTED ON PLAT OF JOHNSON'S LAKE-COOK SUBDIVISION RECORDED DECEMBER 26, 1986 AS DOCUMENT 86619027.
(SURVEYOR'S NOTE: THIS EXCEPTION AFFECTS THE SURVEYED PROPERTY, AND IS SHOWN HEREON.)

H 15. A 6 FOOT PUBLIC UTILITY AND DRAINAGE EASEMENT OVER THE NORTHERLY LINE OF THE LAND AS SHOWN ON PLAT OF JOHNSON'S LAKE-COOK SUBDIVISION AFORESAID.
(SURVEYOR'S NOTE: THIS EXCEPTION AFFECTS THE SURVEYED PROPERTY, AND IS SHOWN HEREON.)

I 16. COVENANT CONTAINED ON PLAT OF JOHNSON'S LAKE-COOK SUBDIVISION RECORDED DECEMBER 26, 1986 AS DOCUMENT 86619027 STATING THAT DETENTION WILL BE PROVIDED UPON THE DEVELOPMENT OF THE LAND.
(SURVEYOR'S NOTE: THIS EXCEPTION AFFECTS THE SURVEYED PROPERTY BUT IS NOT A PLOTTABLE ITEM.)

J 17. THE LAND IS TO PROVIDE SANITARY SERVICE TO LOT 3 UPON DEVELOPMENT OF THE LAND AS SHOWN ON JOHNSON'S LAKE-COOK SUBDIVISION RECORDED DECEMBER 26, 1986 AS DOCUMENT 86619027.
(SURVEYOR'S NOTE: THIS EXCEPTION AFFECTS THE SURVEYED PROPERTY BUT IS NOT A PLOTTABLE ITEM.)

STATE OF ILLINOIS)
) SS
COUNTY OF COOK)

TO: CHICAGO TITLE INSURANCE COMPANY
AND TO: HP WHEELING I LLC, AN ILLINOIS LIMITED LIABILITY COMPANY
AND TO: ROLLING FRITO-LAY SALES, LP, A DELAWARE LIMITED PARTNERSHIP

THIS IS TO CERTIFY THAT THIS MAP OR PLAT AND THE SURVEY ON WHICH IT IS BASED WERE MADE IN ACCORDANCE WITH THE 2016 MINIMUM STANDARD DETAIL REQUIREMENTS FOR ALTA/NSPS LAND TITLE SURVEYS, JOINTLY ESTABLISHED AND ADOPTED BY ALTA AND NSPS, AND INCLUDES ITEMS 1, 2, 3, 4, 6(a), 8 & 16 OF TABLE "A" THEREOF. THE FIELD WORK WAS COMPLETED ON MAY 31, 2016.

GIVEN UNDER MY HAND AND SEAL THIS 1st DAY OF JUNE, 2016 IN ROSEMONT, ILLINOIS.

C. BRIAN LOUNSBURY, I.P.L.S. No. 035-2841
LICENSE EXPIRES: 11-30-2016
blounsbury@spaceco.inc.com

(VALID ONLY IF EMBOSSED SEAL AFFIXED)

C. BRIAN LOUNSBURY 2841 PROFESSIONAL LAND SURVEYOR STATE OF ILLINOIS ROSEMONT, ILLINOIS

PREPARED FOR:
HAMILTON PARTNERS
1130 LAKE COOK ROAD, SUITE 190
BUFFALO GROVE, ILLINOIS 60089

Exhibit received September 21, 2016

REVISIONS:

SPACECO INC.

CONSULTING ENGINEERS
SITE DEVELOPMENT ENGINEERS
LAND SURVEYORS

9575 W. Higgins Road, Suite 700,
Rosemont, Illinois 60018
Phone: (847) 696-4060 Fax: (847) 696-4065

DATE: 06/01/2016
JOB NO: 1642
FILENAME: 1642ALTA-02
SHEET 1 OF 1

N:\DGN\1642\SURVEY\1642ALTA-02.dgn Default User=rpopeck

Traffic Impact Study

Proposed Warehouse/Distribution Facility

Wheeling, Illinois

Prepared for

HAMILTON PARTNERS

Prepared by

KLOA
Kenig, Lindgren, O'Hara, Aboona, Inc.

October 3, 2016

Exhibit received October 4, 2016

1. Introduction

This report summarizes the results of a traffic study conducted by Kenig, Lindgren, O'Hara, Aboona, Inc. (KLOA, Inc.) for a proposed warehouse/distribution facility to be located in Wheeling, Illinois. The site, which is currently vacant, is located on the west side of Northgate Parkway approximately one tenth of a mile south of Lake Cook Road. As proposed, the development is to contain a single building with approximately 181,100 square feet of warehouse/distribution space. Access to the development will be provided via two full movement access drives on Northgate Parkway.

The purpose of this study was to examine existing traffic conditions, assess the impact that the proposed development will have on traffic conditions in the area, and determine if any roadway or access improvements are necessary to accommodate traffic generated by the development.

The sections of this report present the following:

- Existing roadway conditions
- A description of the proposed development
- Directional distribution of the development-generated traffic
- Vehicle trip generation for the proposed development
- Projected traffic conditions, including access to the development
- Traffic analyses for the weekday morning and evening peak hours
- Recommendations with respect to development access and the adjacent roadway network

2. Existing Conditions

Existing transportation conditions in the vicinity of the site were documented based on field visits conducted by KLOA, Inc. in order to obtain a database for projecting future conditions. The following provides a description of the geographical location of the site, physical characteristics of the area roadway system including lane usage and traffic control devices, and existing peak hour traffic volumes.

Site Location

The site, which is currently vacant, is located on the west side of Northgate Parkway approximately one-tenth of a mile south of Lake Cook Road and is bounded by Durable Packaging International to the north, Wieland Metals to the east, the Northgate Business Center to the south, and the Wisconsin Central Railroad to the west. **Figure 1** shows the location of the site in relation to the area roadway system and **Figure 2** shows an aerial view of the site.

Existing Roadway System Characteristics

The characteristics of the existing roads that surround the proposed development are described below and shown in **Figure 3**.

Lake Cook Road is an east-west arterial roadway that within the vicinity of the site generally provides three lanes in each direction. At its signalized intersection with Northgate Parkway, Lake Cook Road provides an exclusive left-turn lane, three exclusive through lanes, and an exclusive right-turn lane on both approaches. Its traffic signal with Northgate Parkway is fully actuated with left-turn protected/permissive with right-turn overlap phases provided on all approaches. Lake Cook Road is under the jurisdiction of the Cook County Department of Transportation and Highways and is classified as a strategic regional arterial (SRA) by the Illinois Department of Transportation (IDOT). Lake Cook Road has a posted speed limit of 45 miles per hour (mph), carries an Annual Average Daily Traffic (AADT) volume of 37,200 vehicles per day west of Northgate Parkway and 39,400 vehicles per day east of Northgate Parkway as reported by IDOT in 2014, and is classified as a class two truck route between U.S. 12 and I-94 by IDOT.

Northgate Parkway is a north-south local roadway that extends from Johnson Drive south to the Wheeling Metra Station and in the vicinity of the site provides one lane in each direction separated by a striped median. At its signalized intersection with Lake Cook Road, Northgate Parkway provides an exclusive left-turn lane, an exclusive through lane, and an exclusive right-turn lane on both approaches. Northgate Parkway is under the jurisdiction of the Village of Wheeling and has a posted speed limit of 30 mph.

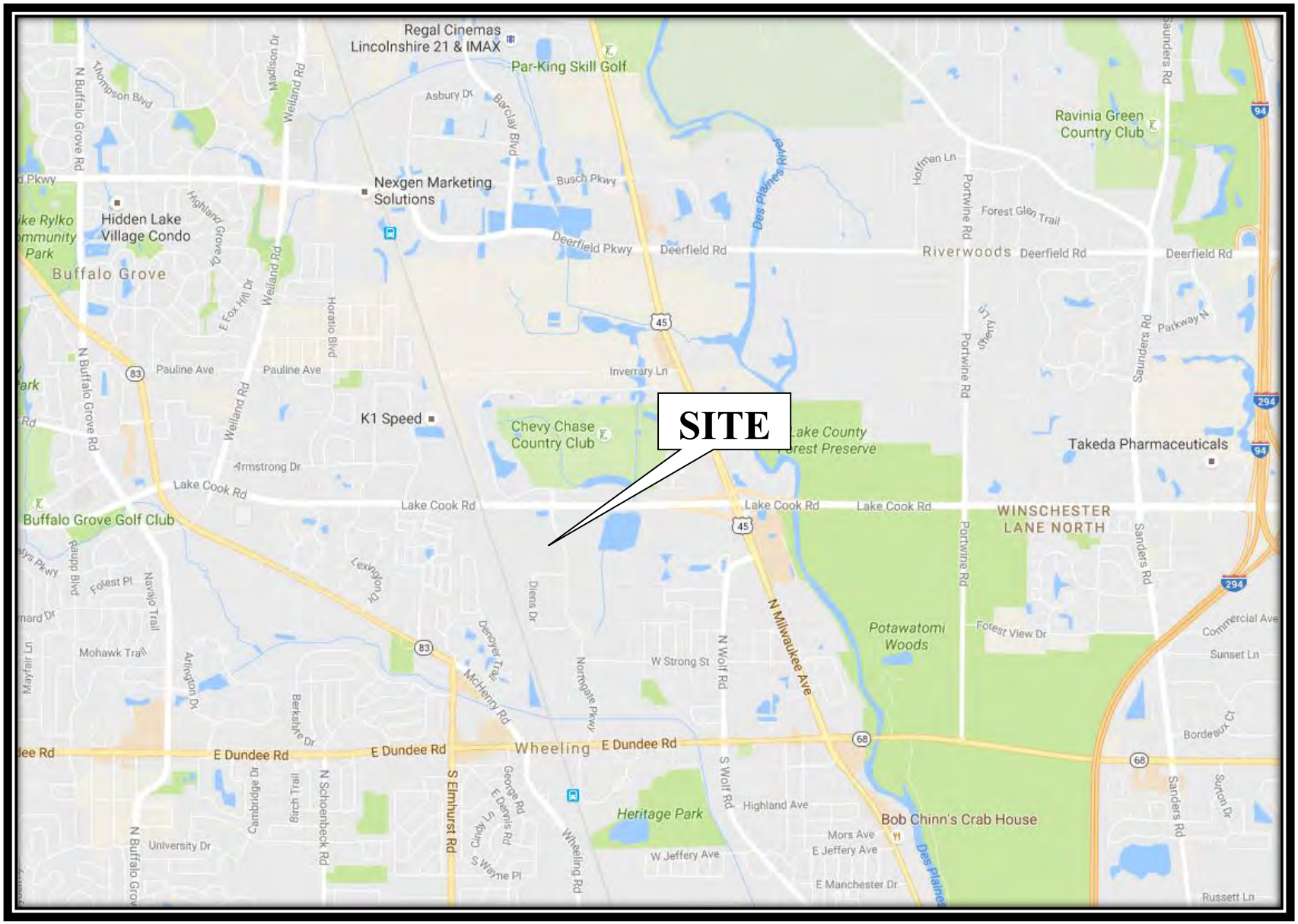

Site Location **Figure 1**

Aerial View of Site Location **Figure 2**

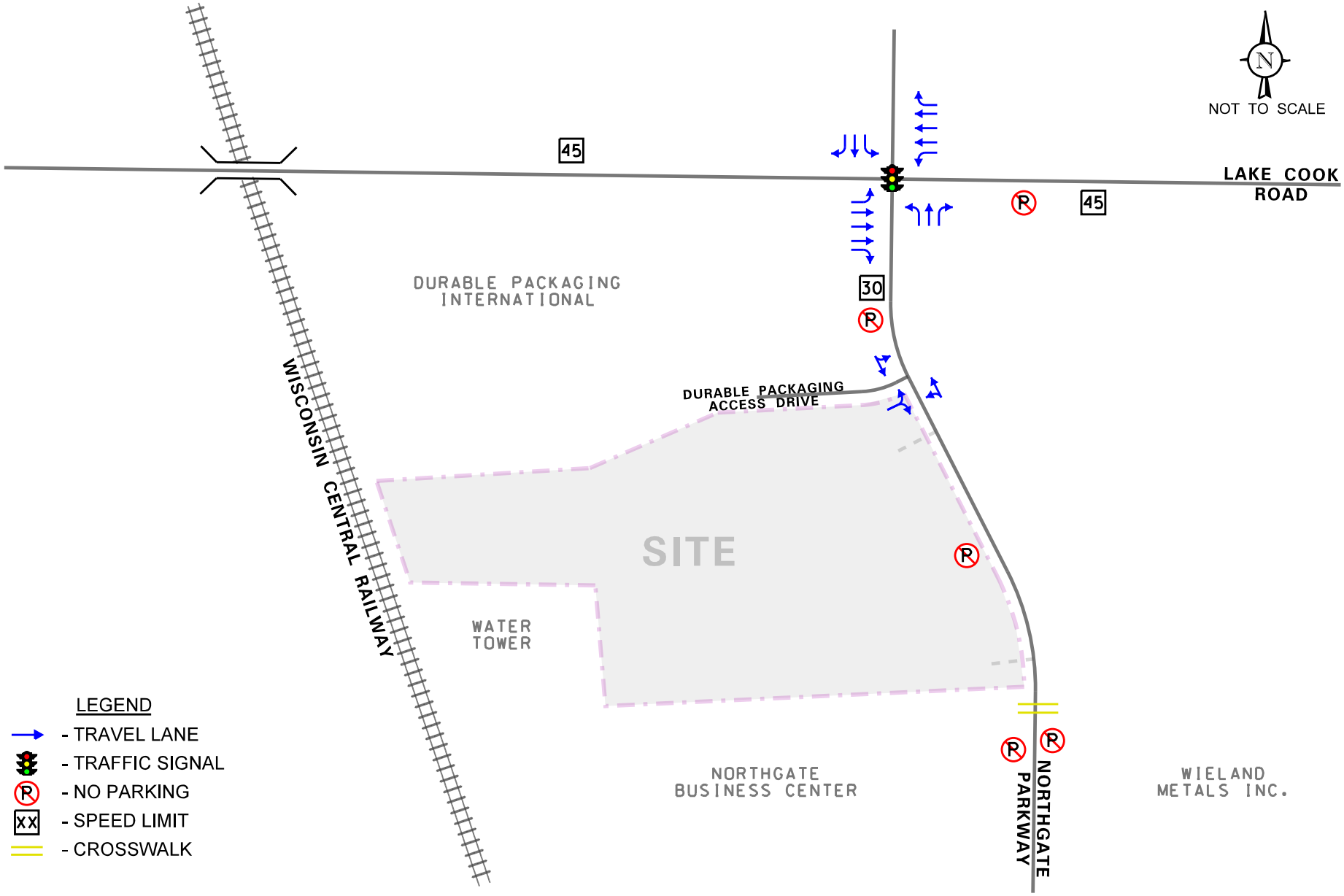

PROJECT:	TITLE:	
Proposed Warehouse/Distribution Center Wheeling, Illinois	Existing Roadway Characteristics	KLOA Job No: 16-214
		Figure: 3

Proposed Lake Cook Road Improvements

Cook County's 2016-2020 Transportation Program lists Lake Cook Road as a future improvement project. As proposed, Lake Cook Road will be widened to provide three through lanes in each direction from Buffalo Grove Road to Hastings Drive, located approximately three-fifths of a mile west of Northgate Parkway, where Lake Cook Road currently narrows from three to two lanes in each direction. Construction on Lake Cook Road is currently anticipated to begin in 2018 and finish in 2019. Furthermore, the Lake Cook Road bridge over the Wisconsin Central Railroad, west of Northgate Parkway, is currently undergoing maintenance work.

Existing Traffic Volumes

In order to determine current traffic conditions on the existing roads, KLOA, Inc. conducted peak period traffic classification counts at the following intersections:

- Lake Cook Road with Northgate Parkway
- Northgate Parkway with the Durable Packaging Access Drive

The traffic counts were conducted on Wednesday, September 7, 2016 during the morning (7:00 A.M. to 9:00 A.M.) and evening (4:00 P.M. to 6:00 P.M.) peak periods. The results of the traffic counts showed that the weekday morning peak hour of traffic occurs from 7:00 A.M. to 8:00 A.M. and the weekday evening peak hour of traffic occurs from 4:30 P.M. to 5:30 P.M. **Figure 4A** illustrates the total existing peak hour traffic volumes and **Figure 4B** illustrates the existing truck peak hour traffic volumes. Summaries of the traffic counts are located in the Appendix. It should be noted that construction on Lake Cook Road for bridge repairs had begun when the traffic counts were conducted and that one lane in each direction was closed on Lake Cook Road several hundred feet west of Northgate Parkway.

Traffic Observations

Field observations conducted during the same peak hours as the traffic counts showed that northbound traffic queues on Northgate Parkway briefly extended past the Durable Packaging access drive several times during the weekday morning peak hour. This is the result of the heavy volume of northbound right-turning traffic onto Lake Cook Road. The northbound traffic queues did not interfere with the operations of the intersection of Northgate Parkway and the Durable Packaging access drive due to courtesy gaps and traffic queues normally clearing every cycle. Furthermore, vehicles turning left or traveling through at Lake Cook Road were observed to regularly bypass the northbound right-turn queues by driving on the median.

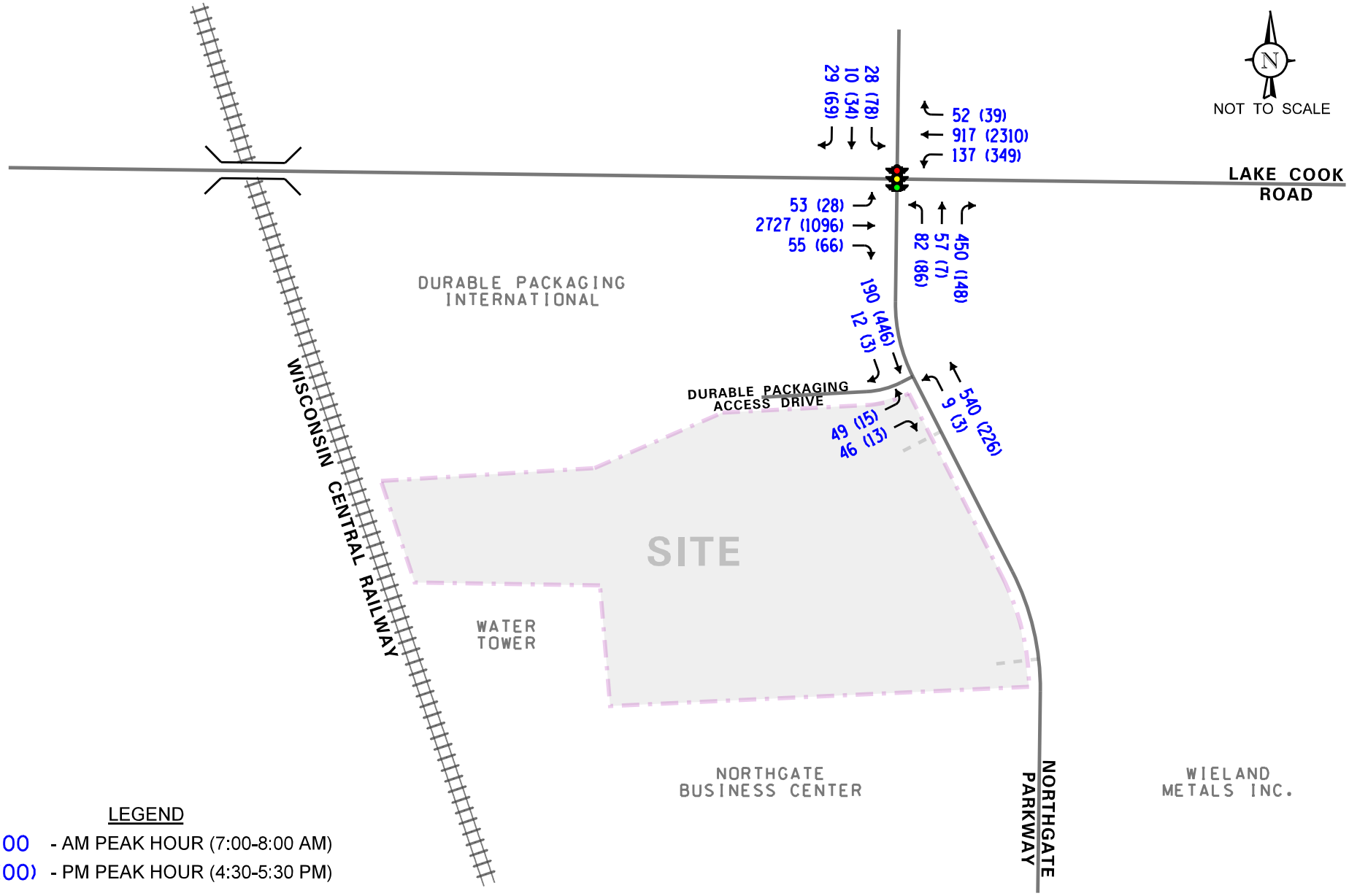

PROJECT:	TITLE:	
Proposed Warehouse/Distribution Center Wheeling, Illinois	Existing Passenger Vehicle and Truck Traffic Volumes	KLOA Job No: 16-214
		Figure: 4A

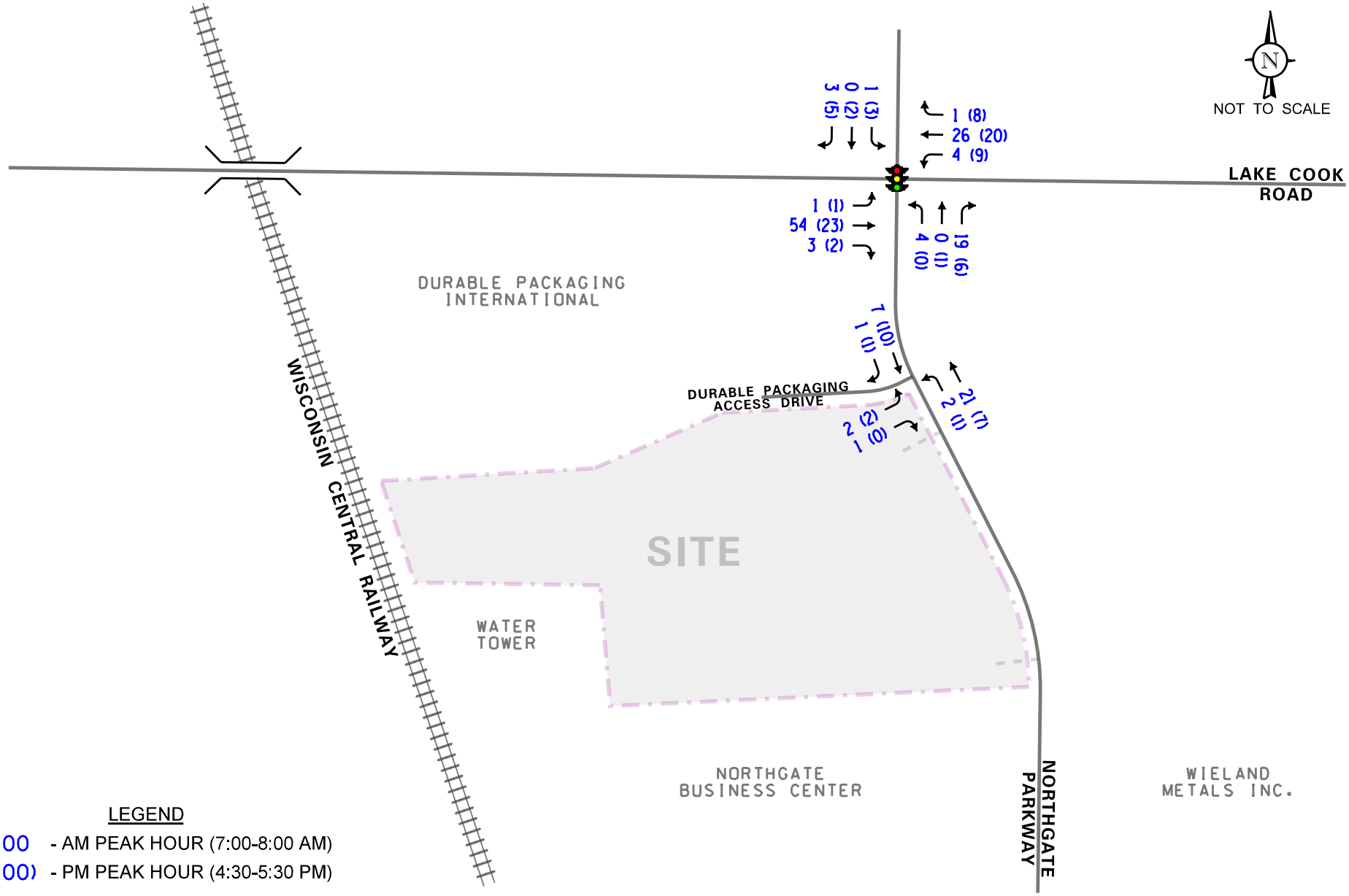

PROJECT:	TITLE:	
Proposed Warehouse/Distribution Center Wheeling, Illinois	Existing Truck Traffic Volumes	KLOA Job No: 16-214
		Figure: 4B

Accident Analysis

KLOA, Inc. obtained accident data from IDOT for the past five years (2010 to 2014) for the intersection of Lake Cook Road with Northgate Parkway. **Table 1** summarizes the accident data for the intersection. A review of the accident data revealed that no fatalities were reported.

DISCLAIMER: The motor vehicle crash data referenced herein was provided by the Illinois Department of Transportation. The author is responsible for any data analyses and conclusions drawn.

Table 1
LAKE COOK ROAD WITH NORTHGATE PARKWAY ACCIDENT SUMMARY

	Type of Accident Frequency						
Year	Angle	Object	Rear End	Sideswipe	Turning	Other	Total
2010	-	3	6	2	2	1	14
2011	-	-	3	1	2	1	7
2012	-	-	3	1	6	1	11
2013	-	1	8	-	3	-	11
2014	-	-	13	3	3	-	19
Total	**0**	**4**	**33**	**7**	**16**	**3**	**62**
Average/Year	**0**	**>1.0**	**6.6**	**1.4**	**3.2**	**>1.0**	**12.4**

3. Traffic Characteristics of the Proposed Development

In order to properly evaluate future traffic conditions in the surrounding area, it was necessary to determine the traffic characteristics of the proposed development, including the directional distribution and volumes of traffic that it will generate.

Proposed Development Plan

As proposed, the development is to consist of a warehouse/distribution building containing approximately 181,100 square feet of space. The following summarizes the proposed access to the development:

- *North Access Drive.* This access drive is proposed to be located on the west side of Northgate Parkway at the north end of the site approximately 125 feet (centerline to centerline) south of the Durable Packaging International access drive. As proposed, this access drive will allow full movements and will be restricted to employee traffic only. The access drive will provide one inbound lane and one outbound lane under stop sign control. Similar to other access drives in the vicinity, inbound left turns will be accommodated by the existing striped median.

- *South Access Drive.* This access drive is proposed to be located on the west side of Northgate Parkway at the south end of the site, approximately 425 feet (centerline to centerline) south of the north access drive and opposite the Wieland Metals middle access drive. As proposed, this access drive will allow full movements and will allow both employee and truck traffic. The access drive will provide one inbound lane and one outbound lane under stop sign control. Similar to other access drives in the vicinity, inbound left turns will be accommodated by the existing striped median. In addition, the access drive will be designed with larger radii in order to accommodate the turning truck traffic.

The preliminary site plan prepared by Ware Malcomb and dated August 26, 2016 can be found in the Appendix.

Directional Distribution of Site Traffic

The directions from which development-generated traffic will approach and depart the site were estimated based on the existing travel patterns, as determined from the traffic counts. **Figure 5A** illustrates the estimated directional distribution for passenger vehicles and **Figure 5B** illustrates the estimated directional distribution for trucks.

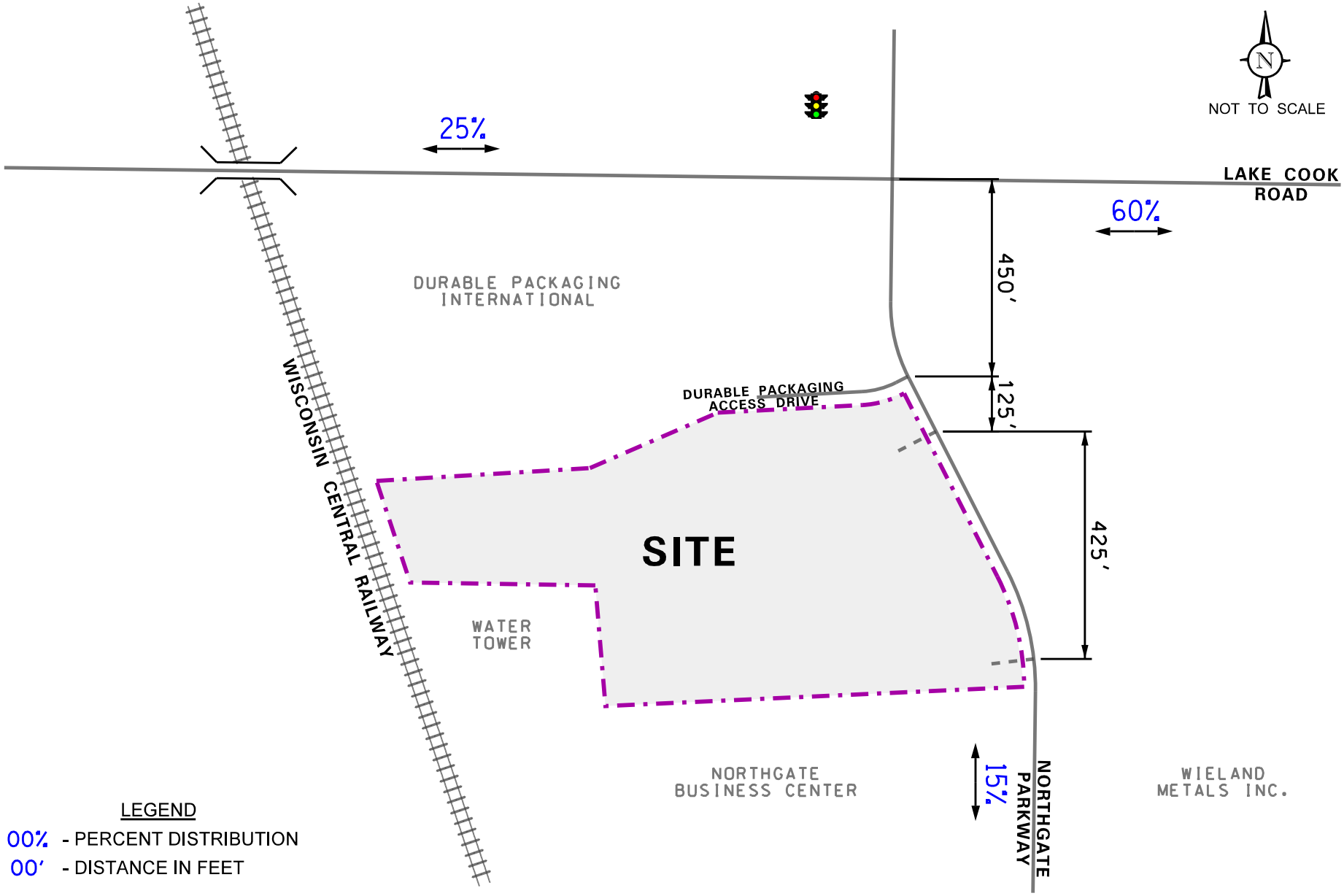

PROJECT:	TITLE:	
Proposed Warehouse/Distribution Center Wheeling, Illinois	Estimated Passenger Vehicle Directional Distribution	KLOA Job No: 16-214
		Figure: 5A

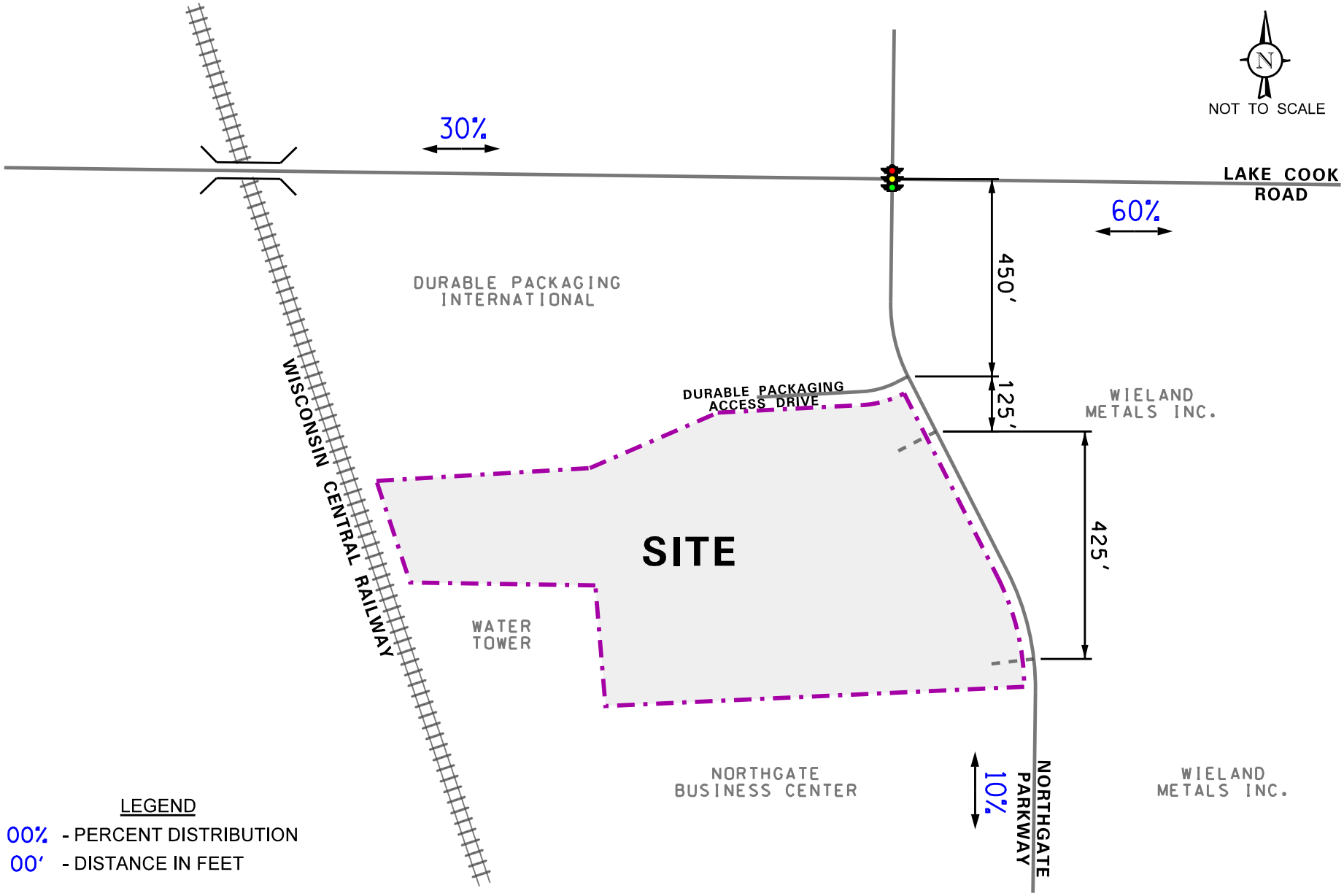

PROJECT:	TITLE:	
Proposed Warehouse/Distribution Center Wheeling, Illinois	Estimated Truck Directional Distribution	KLOA Job No: 16-214
		Figure: 5B

Site Traffic Generation

As stated previously, the development is proposed to consist of approximately 181,100 square feet of warehouse/distribution space. The estimate of the peak hour traffic that will be generated by the development was based on the trip generation rates published in the Institute of Transportation Engineers' (ITE) *Trip Generation Manual*, 9th Edition. **Table 2** shows the estimated peak hour traffic to be generated by the development separated by passenger vehicles and trucks. Based on information provided in the *Trip Generation Manual*, it was determined that trucks would represent 20 percent of the total traffic generated by the development during the peak hours. It should be noted that to provide a conservative (worst-case) analysis, the warehouse trip rates were used as opposed to the distribution center trip rates to estimate the peak hour traffic as the warehouse rates were higher.

Table 2
ESTIMATED SITE-GENERATED TRAFFIC VOLUMES

ITE Land-Use Code	Land Use/Size	Weekday Morning Peak Hour			Weekday Evening Peak Hour			Daily Two-Way Trips
		In	Out	Total	In	Out	Total	Total
150	Warehouse (181,100 s.f.)							
	Passenger Vehicles	34	9	43	11	34	45	658
	Trucks	9	2	11	3	9	12	164
	Total	**43**	**11**	**54**	**14**	**43**	**57**	**822**

4. Projected Traffic Conditions

The projected Year 2022 traffic volumes include the existing traffic volumes, increase in background traffic due to ambient growth, and the traffic estimated to be generated by the proposed development.

Development Traffic Assignment

The estimated weekday morning and evening peak hour traffic volumes that will be generated by the proposed development were assigned to the roadway system in accordance with the previously described directional distributions (Figures 5A and 5B). **Figure 6A** illustrates the passenger vehicle traffic assignment and **Figure 6B** illustrates the truck traffic assignment for the development.

Background Traffic Conditions

The existing traffic volumes (Figure 4A) were increased by a regional growth factor to account for the increase in existing traffic related to regional growth in the area (i.e., not attributable to any particular planned development). Based on the Chicago Metropolitan Agency for Planning (CMAP) *2040 Forecast of Population, Households and Employment* an increase of 0.75 percent per year over six years (buildout year plus five years) for a total of four and a half percent was applied to the existing traffic volumes to obtain projected Year 2022 traffic volumes. In addition, traffic that will be generated by the proposed nearby retail development on Northgate Parkway to be located in the northeast quadrant of the intersection of Dundee Road (IL 68) with Northgate Parkway and the Wheeling Town Center development to be located on the south side of Dundee Road were added to the Year 2022 traffic volumes. A copy of the CMAP traffic projections letter can be found in the Appendix.

Projected Year 2022 Traffic Volumes

Projected Year 2022 traffic volumes include the existing traffic volumes, the additional background growth, and the traffic estimated to be generated by the proposed development. **Figure 7** shows the projected Year 2022 traffic volumes.

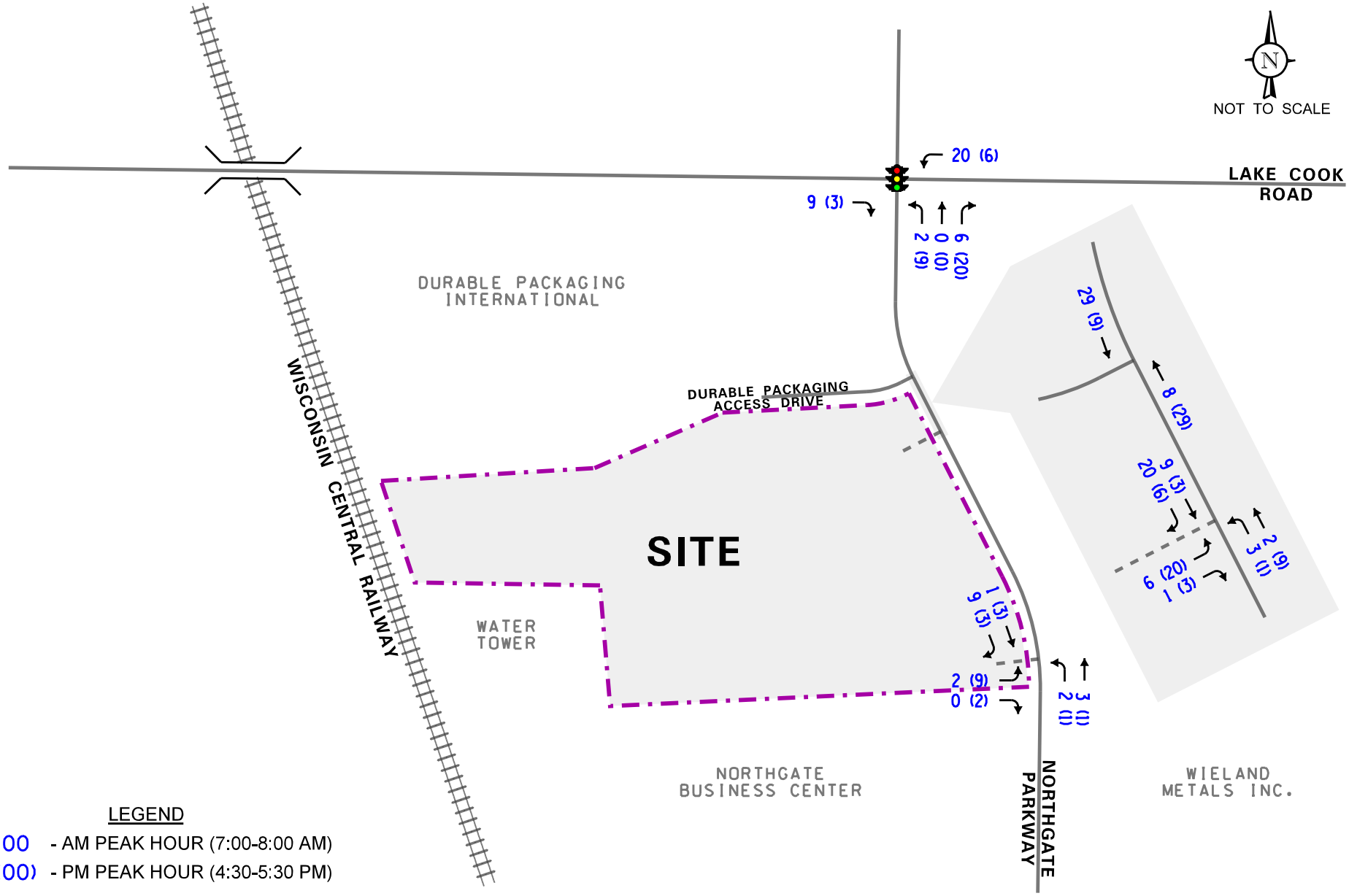

PROJECT:	TITLE:	
Proposed Warehouse/Distribution Center Wheeling, Illinois	Estimated Site-Generated Passenger Vehicle Traffic Volumes	KLOA Job No: 16-214
		Figure: 6A

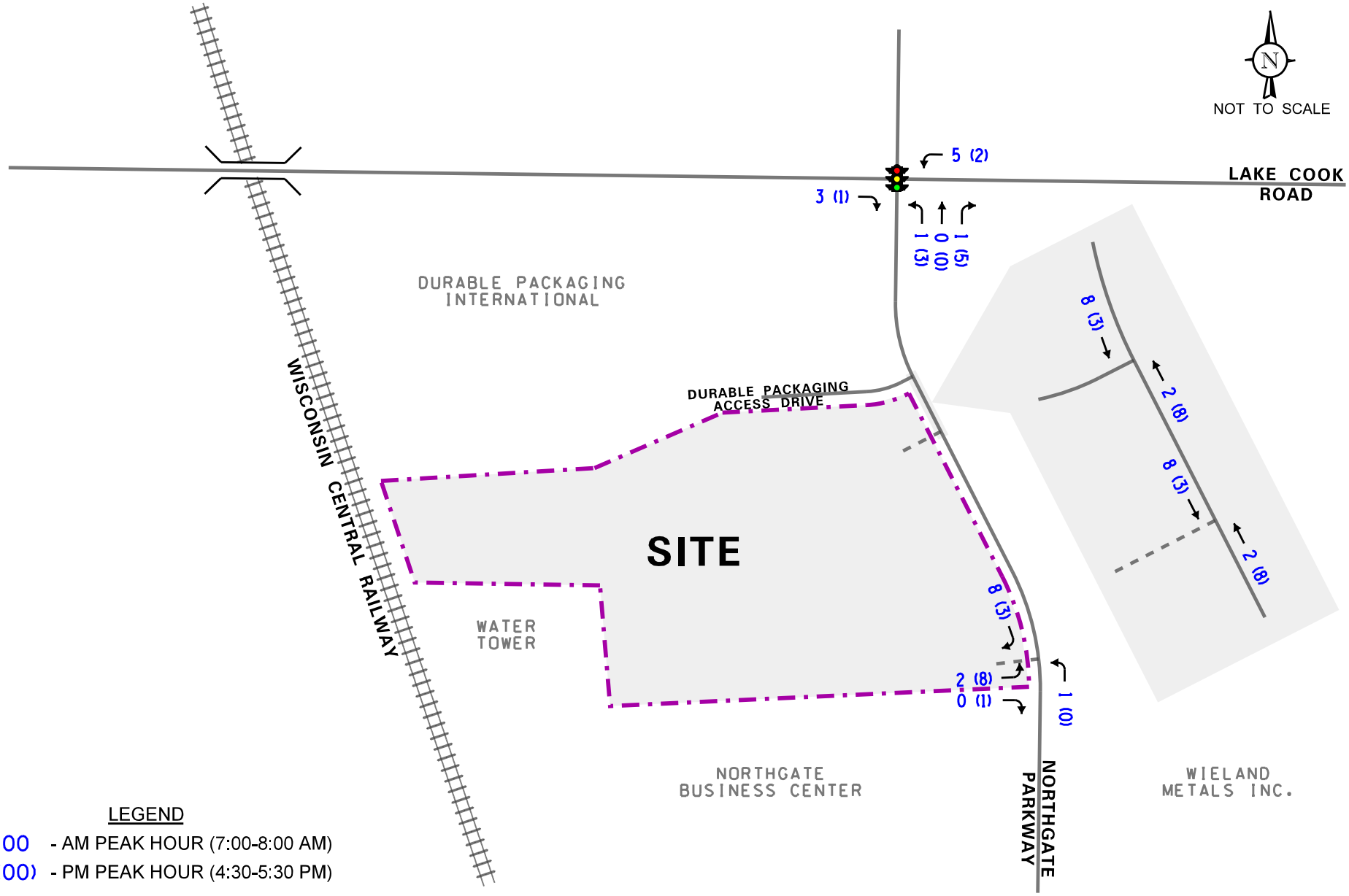

PROJECT:	TITLE:	
Proposed Warehouse/Distribution Center Wheeling, Illinois	Estimated Site-Generated Truck Traffic Volumes	KLOA Job No: 16-214
		Figure: 6B

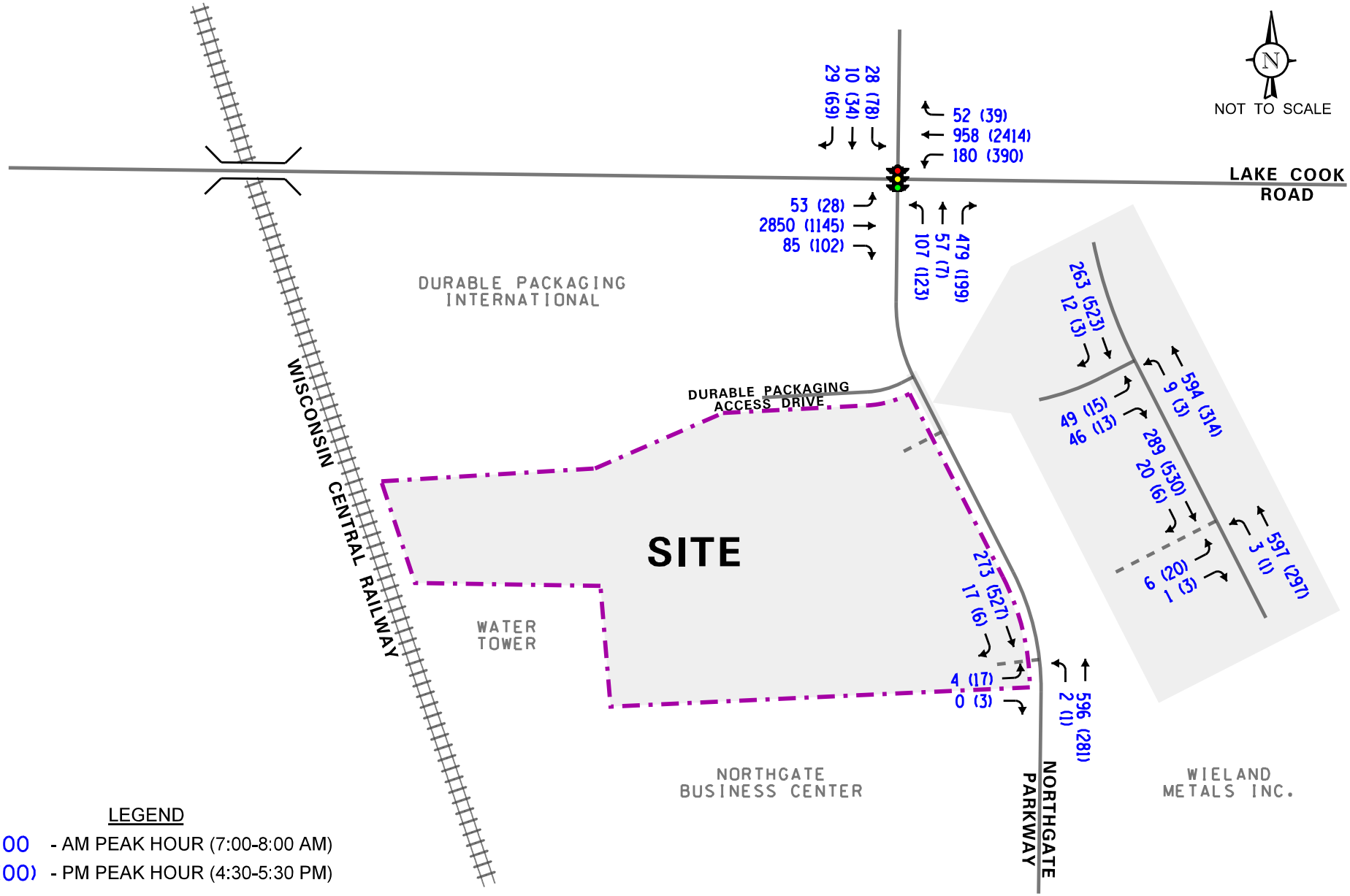

PROJECT:	TITLE:	
Proposed Warehouse/Distribution Center Wheeling, Illinois	Total Projected Traffic Volumes	KLOA Job No: 16-214
		Figure: 7

5. Traffic Evaluation

The following provides an evaluation conducted for the weekday morning and weekday evening peak hours. The analysis includes conducting capacity analyses to provide an indication of how well the roadway facilities will serve the anticipated traffic demands placed upon them assuming the projected Year 2022 traffic volumes.

Traffic Analyses

Roadway and adjacent or nearby intersection analyses were performed for the weekday morning and weekday evening peak periods for the existing (Year 2016) and future projected (Year 2022) traffic volumes.

The traffic analyses were performed using the methodologies outlined in the Transportation Research Board's *Highway Capacity Manual (HCM), 2010* and analyzed using Synchro 8 computer software. The analyses for the traffic-signal controlled intersections were accomplished using actual cycle lengths and phasings to determine the average overall vehicle delay and levels of service.

The analyses for the unsignalized intersections determine the average control delay to vehicles at an intersection. Control delay is the elapsed time from a vehicle joining the queue at a stop sign (includes the time required to decelerate to a stop) until its departure from the stop sign and resumption of free flow speed. The methodology analyzes each intersection approach controlled by a stop sign and considers traffic volumes on all approaches and lane characteristics.

The ability of an intersection to accommodate traffic flow is expressed in terms of level of service, which is assigned a letter from A to F based on the average control delay experienced by vehicles passing through the intersection. The *Highway Capacity Manual* definitions for levels of service and the corresponding control delay for signalized and unsignalized intersections are included in the Appendix of this report.

Summaries of the traffic analysis results showing the level of service and overall intersection delay (measured in seconds) for the existing and projected Year 2022 traffic volumes are presented in **Tables 3** and **4**. A discussion of the intersections follows. It should be noted that truck percentages were adjusted to reflect the anticipated increase in truck traffic as a result of the proposed development. Summary sheets for the capacity analyses are included in the Appendix.

Table 3
INTERSECTION LEVEL OF SERVICE AND DELAY – EXISTING CONDITIONS

Intersection	Morning Peak Hour LOS	Morning Peak Hour Delay	Evening Peak Hour LOS	Evening Peak Hour Delay
Lake Cook Road with Northgate Parkway[1]				
• Overall	C	32.6	B	16.3
• Eastbound Approach	C	33.9	B	14.6
• Westbound Approach	B	18.0	B	14.3
• Northbound Approach	D	54.0	C	29.5
• Southbound Approach	C	29.9	D	39.4
Northgate Parkway with Durable Packaging Access Drive[2]				
• Eastbound Approach	C	16.0	B	13.4
• Northbound Left Turn	A	0.1	A	0.0

LOS - Level of Service
Delay is measured in seconds.
[1] Signalized Intersection
[2] Unsignalized Intersection

Table 4
INTERSECTION LEVEL OF SERVICE AND DELAY – FUTURE CONDITIONS

Intersection	Morning Peak Hour LOS	Morning Peak Hour Delay	Evening Peak Hour LOS	Evening Peak Hour Delay
Lake Cook Road with Northgate Parkway[1]				
• Overall	D	38.1	C	20.9
• Eastbound Approach	D	38.2	B	18.1
• Westbound Approach	C	26.7	B	18.9
• Northbound Approach	E	59.6	D	38.1
• Southbound Approach	C	29.6	D	39.1
Northgate Parkway with Durable Packaging Access Drive[2]				
• Eastbound Approach	C	19.3	C	15.6
• Northbound Left Turn	A	0.3	A	0.1
Northgate Parkway with North Access Drive[2]				
• Eastbound Approach	C	16.6	C	16.5
• Northbound Left Turn	A	0.1	A	0.0
Northgate Parkway with South Access Drive[2]				
• Eastbound Approach	C	24.0	C	21.1
• Northbound Left Turn	A	0.1	A	0.1

LOS - Level of Service
Delay is measured in seconds.
[1] Signalized Intersection
[2] Unsignalized Intersection

Results of the Capacity Analyses

The following summarizes the results of the capacity analyses:

Lake Cook Road with Northgate Parkway

The results of the capacity analyses indicate that this intersection is currently operating at a good Level of Service (LOS) C or better during the weekday morning and evening peak hours. It should be noted that during the morning peak hour, the northbound approach is experiencing longer delays primarily due to the high volume of northbound right-turn movements. Based on traffic observations, northbound traffic queues occasionally extend past the Durable Packaging access drive but generally clear within one to two cycles. Under future conditions, this intersection is expected to operate at an acceptable LOS D or better during the weekday morning and evening peak hours although northbound right-turn traffic queues are expected to increase primarily due to background growth. As such, the intersection will have sufficient reserve capacity to accommodate the additional traffic to be generated by the development.

Northgate Parkway with Durable Packaging Access Drive

The results of the capacity analyses indicate that the critical movements at this intersection are currently operating at a good LOS C or better during the weekday morning and evening peak hours. Under future conditions, the critical movements at this intersection are expected to continue operating at a good LOS C or better during both peak hours. As such, the intersection will have sufficient reserve capacity to accommodate the additional traffic to be generated by the development.

Northgate Parkway with North Access Drive

This access drive is proposed to be located on the west side of Northgate Parkway at the north end of the site and approximately 125 feet (centerline to centerline) south of the Durable Packaging access drive. As proposed, this access drive will provide full movement access to the development restricted to passenger vehicles only. The access drive will provide one inbound lane and one outbound lane under stop sign control. The results of the capacity analyses indicate that the critical movements at this intersection, including the northbound left turns which will be accommodated by the existing striped median, are projected to operate at a good LOS C or better during both peak hours.

Northgate Parkway with South Access Drive

This access drive is proposed to be located on the west side of Northgate Parkway at the south end of the site approximately 425 feet south of the north access drive opposite the Wieland Metals middle access drive and will provide full movement access to the development for both passenger vehicles and trucks. The access drive will provide one inbound lane and one outbound lane under stop sign control. In addition, this access drive will be designed with larger radii in order to accommodate the turning truck traffic. The results of the capacity analyses indicate that the critical movements at the intersection are projected to operate at a good LOS C or better during both peak hours.

6. Conclusion

Based on the preceding analyses and recommendations, the following conclusions have been determined:

- The proposed facility will not generate a significant amount of vehicular or truck traffic.
- The results of the capacity analyses show that the existing roadway system generally has sufficient reserve capacity to accommodate the additional traffic to be generated by the proposed development.
- The proposed access system will be adequate in accommodating both passenger vehicle and truck traffic.
- Providing two access drives, one designated for passenger vehicles and the other designated for trucks, will ensure that safe access and on-site circulation are provided.

Appendix

Traffic Count Summary Sheets
Preliminary Site Plan
Year 2040 CMAP Letter
Level of Service Criteria
Capacity Analysis Summary Sheets

Traffic Count Summary Sheets

Warehouse/Distribution Facility
Wheeling, Illinois

KLOA
Kenig, Lindgren, O'Hara, Aboona, Inc.

Kenig Lindgren O'Hara Aboona, Inc.
9575 W. Higgins Rd., Suite 400

Rosemont, Illinois, United States 60018
(847)518-9990

Count Name: Lake Cook Road and Northgate Parkway
Site Code:
Start Date: 09/07/2016

Turning Movement Data

Start Time	Lake Cook Road Eastbound						Lake Cook Road Westbound						Northgate Parkway Northbound						Northgate Parkway Southbound						Int. Total
	U-Turn	Left	Thru	Right	Peds	App. Total	U-Turn	Left	Thru	Right	Peds	App. Total	U-Turn	Left	Thru	Right	Peds	App. Total	U-Turn	Left	Thru	Right	Peds	App. Total	
6:00 AM	0	9	335	18	0	362	0	27	78	11	0	116	0	8	5	28	0	41	0	2	4	7	0	13	532
6:15 AM	0	24	430	22	0	476	0	39	152	11	0	202	0	8	8	37	0	53	0	0	2	4	0	6	737
6:30 AM	0	8	571	44	0	623	0	47	166	16	0	229	0	18	5	60	0	83	0	3	3	3	0	9	944
6:45 AM	0	14	577	33	0	624	0	50	219	9	0	278	0	19	5	60	0	84	0	9	1	10	0	20	1006
Hourly Total	0	55	1913	117	0	2085	0	163	615	47	0	825	0	53	23	185	0	261	0	14	10	24	0	48	3219
7:00 AM	0	21	644	21	1	686	0	42	198	14	0	254	0	33	14	99	0	146	0	8	4	5	1	17	1103
7:15 AM	0	13	683	7	0	703	0	36	232	12	0	280	0	23	16	102	0	141	0	5	5	8	0	18	1142
7:30 AM	0	11	795	14	1	820	0	26	228	13	0	267	0	9	7	100	0	116	0	7	0	11	1	18	1221
7:45 AM	0	8	605	13	0	626	0	33	259	13	0	305	0	17	20	141	0	178	0	8	1	5	0	14	1123
Hourly Total	0	53	2727	55	2	2835	0	137	917	52	0	1106	0	82	57	442	0	581	0	28	10	29	2	67	4589
8:00 AM	0	8	707	12	0	727	0	27	207	8	0	242	0	13	4	124	0	141	0	10	1	3	0	14	1124
8:15 AM	0	16	572	12	0	600	0	28	213	4	0	245	0	18	11	106	0	135	0	6	3	6	0	15	995
8:30 AM	0	7	511	13	0	531	0	22	296	8	0	326	0	11	1	127	0	139	0	8	1	8	0	17	1013
8:45 AM	1	16	524	14	0	555	0	26	243	2	0	271	0	14	3	104	0	121	0	12	1	5	0	18	965
Hourly Total	1	47	2314	51	0	2413	0	103	959	22	0	1084	0	56	19	461	0	536	0	36	6	22	0	64	4097
*** BREAK ***	-	-	-	-	-	-	-	-	-	-	-	-	-	-	-	-	-	-	-	-	-	-	-	-	-
3:30 PM	1	1	268	27	0	297	0	52	468	1	0	521	0	21	6	38	0	65	0	30	10	23	0	63	946
3:45 PM	0	10	315	21	0	346	0	46	459	5	0	510	0	18	3	46	0	67	0	5	1	15	0	21	944
Hourly Total	1	11	583	48	0	643	0	98	927	6	0	1031	0	39	9	84	0	132	0	35	11	38	0	84	1890
4:00 PM	0	2	306	23	0	331	0	68	484	5	0	557	0	17	2	49	0	68	0	30	16	49	0	95	1051
4:15 PM	0	6	309	15	0	330	0	60	550	11	0	621	0	19	5	33	0	57	0	18	4	14	0	36	1044
4:30 PM	0	10	256	18	0	284	0	81	528	9	0	618	0	19	0	52	1	71	0	17	7	21	0	45	1018
4:45 PM	0	7	274	17	0	298	0	96	553	9	0	658	0	18	0	24	0	42	0	20	8	18	0	46	1044
Hourly Total	0	25	1145	73	0	1243	0	305	2115	34	0	2454	0	73	7	158	1	238	0	85	35	102	0	222	4157
5:00 PM	0	5	286	16	0	307	0	83	594	12	0	689	0	21	3	38	0	62	0	30	16	20	0	66	1124
5:15 PM	0	6	280	14	1	300	0	84	635	9	1	728	0	28	4	32	0	64	0	11	3	10	0	24	1116
5:30 PM	0	10	278	21	0	309	0	70	526	7	0	603	0	22	2	36	0	60	0	16	10	22	0	48	1020
5:45 PM	0	10	278	20	0	308	2	58	500	13	0	573	0	24	4	24	0	52	0	23	4	5	0	32	965
Hourly Total	0	31	1122	71	1	1224	2	295	2255	41	1	2593	0	95	13	130	0	238	0	80	33	57	0	170	4225
6:00 PM	0	5	262	23	0	290	0	43	500	11	0	554	0	22	1	20	0	43	0	21	7	14	0	42	929
6:15 PM	0	4	215	17	0	236	0	55	421	4	0	480	0	22	3	26	0	51	0	7	5	12	0	24	791
Grand Total	2	231	10281	455	3	10969	2	1199	8709	217	1	10127	0	442	132	1506	1	2080	0	306	117	298	2	721	23897
Approach %	0.0	2.1	93.7	4.1	-	-	0.0	11.8	86.0	2.1	-	-	0.0	21.3	6.3	72.4	-	-	0.0	42.4	16.2	41.3	-	-	-
Total %	0.0	1.0	43.0	1.9	-	45.9	0.0	5.0	36.4	0.9	-	42.4	0.0	1.8	0.6	6.3	-	8.7	0.0	1.3	0.5	1.2	-	3.0	-
Lights	2	224	10038	438	-	10702	2	1160	8505	204	-	9871	0	427	125	1446	-	1998	0	287	110	281	-	678	23249
% Lights	100.0	97.0	97.6	96.3	-	97.6	100.0	96.7	97.7	94.0	-	97.5	-	96.6	94.7	96.0	-	96.1	-	93.8	94.0	94.3	-	94.0	97.3
Buses	0	1	17	3	-	21	0	2	15	0	-	17	0	0	0	1	-	1	0	2	0	5	-	7	46

% Buses	0.0	0.4	0.2	0.7	-	0.2	0.0	0.2	0.2	0.0	-	0.2	-	0.0	0.0	0.1	-	0.0	-	0.7	0.0	1.7	-	1.0	0.2
Single-Unit Trucks	0	2	153	8	-	163	0	13	128	5	-	146	0	7	2	35	-	44	0	6	3	7	-	16	369
% Single-Unit Trucks	0.0	0.9	1.5	1.8	-	1.5	0.0	1.1	1.5	2.3	-	1.4	-	1.6	1.5	2.3	-	2.1	-	2.0	2.6	2.3	-	2.2	1.5
Articulated Trucks	0	4	73	6	-	83	0	24	60	8	-	92	0	7	3	24	-	34	0	11	1	5	-	17	226
% Articulated Trucks	0.0	1.7	0.7	1.3	-	0.8	0.0	2.0	0.7	3.7	-	0.9	-	1.6	2.3	1.6	-	1.6	-	3.6	0.9	1.7	-	2.4	0.9
Bicycles on Road	0	0	0	0	-	0	0	0	1	0	-	1	0	1	2	0	-	3	0	0	3	0	-	3	7
% Bicycles on Road	0.0	0.0	0.0	0.0	-	0.0	0.0	0.0	0.0	0.0	-	0.0	-	0.2	1.5	0.0	-	0.1	-	0.0	2.6	0.0	-	0.4	0.0
Pedestrians	-	-	-	-	3	-	-	-	-	-	1	-	-	-	-	-	1	-	-	-	-	-	2	-	-
% Pedestrians	-	-	-	-	100.0	-	-	-	-	-	100.0	-	-	-	-	-	100.0	-	-	-	-	-	100.0	-	-

Kenig Lindgren O'Hara Aboona, Inc.
9575 W. Higgins Rd., Suite 400

Rosemont, Illinois, United States 60018
(847)518-9990

Count Name: Lake Cook Road and Northgate Parkway
Site Code:
Start Date: 09/07/2016

Turning Movement Peak Hour Data (7:00 AM)

Start Time	Lake Cook Road Eastbound						Lake Cook Road Westbound						Northgate Parkway Northbound						Northgate Parkway Southbound						
	U-Turn	Left	Thru	Right	Peds	App. Total	U-Turn	Left	Thru	Right	Peds	App. Total	U-Turn	Left	Thru	Right	Peds	App. Total	U-Turn	Left	Thru	Right	Peds	App. Total	Int. Total
7:00 AM	0	21	644	21	1	686	0	42	198	14	0	254	0	33	14	99	0	146	0	8	4	5	1	17	1103
7:15 AM	0	13	683	7	0	703	0	36	232	12	0	280	0	23	16	102	0	141	0	5	5	8	0	18	1142
7:30 AM	0	11	795	14	1	820	0	26	228	13	0	267	0	9	7	100	0	116	0	7	0	11	1	18	1221
7:45 AM	0	8	605	13	0	626	0	33	259	13	0	305	0	17	20	141	0	178	0	8	1	5	0	14	1123
Total	0	53	2727	55	2	2835	0	137	917	52	0	1106	0	82	57	442	0	581	0	28	10	29	2	67	4589
Approach %	0.0	1.9	96.2	1.9	-	-	0.0	12.4	82.9	4.7	-	-	0.0	14.1	9.8	76.1	-	-	0.0	41.8	14.9	43.3	-	-	-
Total %	0.0	1.2	59.4	1.2	-	61.8	0.0	3.0	20.0	1.1	-	24.1	0.0	1.8	1.2	9.6	-	12.7	0.0	0.6	0.2	0.6	-	1.5	-
PHF	0.000	0.631	0.858	0.655	-	0.864	0.000	0.815	0.885	0.929	-	0.907	0.000	0.621	0.713	0.784	-	0.816	0.000	0.875	0.500	0.659	-	0.931	0.940
Lights	0	52	2668	52	-	2772	0	133	878	51	-	1062	0	78	57	423	-	558	0	27	10	26	-	63	4455
% Lights	-	98.1	97.8	94.5	-	97.8	-	97.1	95.7	98.1	-	96.0	-	95.1	100.0	95.7	-	96.0	-	96.4	100.0	89.7	-	94.0	97.1
Buses	0	0	5	0	-	5	0	0	2	0	-	2	0	0	0	0	-	0	0	0	0	2	-	2	9
% Buses	-	0.0	0.2	0.0	-	0.2	-	0.0	0.2	0.0	-	0.2	-	0.0	0.0	0.0	-	0.0	-	0.0	0.0	6.9	-	3.0	0.2
Single-Unit Trucks	0	0	40	1	-	41	0	3	24	1	-	28	0	1	0	11	-	12	0	1	0	1	-	2	83
% Single-Unit Trucks	-	0.0	1.5	1.8	-	1.4	-	2.2	2.6	1.9	-	2.5	-	1.2	0.0	2.5	-	2.1	-	3.6	0.0	3.4	-	3.0	1.8
Articulated Trucks	0	1	14	2	-	17	0	1	13	0	-	14	0	3	0	8	-	11	0	0	0	0	-	0	42
% Articulated Trucks	-	1.9	0.5	3.6	-	0.6	-	0.7	1.4	0.0	-	1.3	-	3.7	0.0	1.8	-	1.9	-	0.0	0.0	0.0	-	0.0	0.9
Bicycles on Road	0	0	0	0	-	0	0	0	0	0	-	0	0	0	0	0	-	0	0	0	0	0	-	0	0
% Bicycles on Road	-	0.0	0.0	0.0	-	0.0	-	0.0	0.0	0.0	-	0.0	-	0.0	0.0	0.0	-	0.0	-	0.0	0.0	0.0	-	0.0	0.0
Pedestrians	-	-	-	-	2	-	-	-	-	-	0	-	-	-	-	-	0	-	-	-	-	-	2	-	-
% Pedestrians	-	-	-	-	100.0	-	-	-	-	-	-	-	-	-	-	-	-	-	-	-	-	-	100.0	-	-

Kenig Lindgren O'Hara Aboona, Inc.
9575 W. Higgins Rd., Suite 400

Rosemont, Illinois, United States 60018
(847)518-9990

Count Name: Lake Cook Road and Northgate Parkway
Site Code:
Start Date: 09/07/2016

Turning Movement Peak Hour Data (4:30 PM)

Start Time	Lake Cook Road Eastbound						Lake Cook Road Westbound						Northgate Parkway Northbound						Northgate Parkway Southbound						
	U-Turn	Left	Thru	Right	Peds	App. Total	U-Turn	Left	Thru	Right	Peds	App. Total	U-Turn	Left	Thru	Right	Peds	App. Total	U-Turn	Left	Thru	Right	Peds	App. Total	Int. Total
4:30 PM	0	10	256	18	0	284	0	81	528	9	0	618	0	19	0	52	1	71	0	17	7	21	0	45	1018
4:45 PM	0	7	274	17	0	298	0	96	553	9	0	658	0	18	0	24	0	42	0	20	8	18	0	46	1044
5:00 PM	0	5	286	16	0	307	0	83	594	12	0	689	0	21	3	38	0	62	0	30	16	20	0	66	1124
5:15 PM	0	6	280	14	1	300	0	84	635	9	1	728	0	28	4	32	0	64	0	11	3	10	0	24	1116
Total	0	28	1096	65	1	1189	0	344	2310	39	1	2693	0	86	7	146	1	239	0	78	34	69	0	181	4302
Approach %	0.0	2.4	92.2	5.5	-	-	0.0	12.8	85.8	1.4	-	-	0.0	36.0	2.9	61.1	-	-	0.0	43.1	18.8	38.1	-	-	-
Total %	0.0	0.7	25.5	1.5	-	27.6	0.0	8.0	53.7	0.9	-	62.6	0.0	2.0	0.2	3.4	-	5.6	0.0	1.8	0.8	1.6	-	4.2	-
PHF	0.000	0.700	0.958	0.903	-	0.968	0.000	0.896	0.909	0.813	-	0.925	0.000	0.768	0.438	0.702	-	0.842	0.000	0.650	0.531	0.821	-	0.686	0.957
Lights	0	27	1073	63	-	1163	0	335	2290	31	-	2656	0	86	6	140	-	232	0	75	32	64	-	171	4222
% Lights	-	96.4	97.9	96.9	-	97.8	-	97.4	99.1	79.5	-	98.6	-	100.0	85.7	95.9	-	97.1	-	96.2	94.1	92.8	-	94.5	98.1
Buses	0	0	2	1	-	3	0	1	1	0	-	2	0	0	0	0	-	0	0	1	0	1	-	2	7
% Buses	-	0.0	0.2	1.5	-	0.3	-	0.3	0.0	0.0	-	0.1	-	0.0	0.0	0.0	-	0.0	-	1.3	0.0	1.4	-	1.1	0.2
Single-Unit Trucks	0	0	10	1	-	11	0	3	12	3	-	18	0	0	0	3	-	3	0	0	1	2	-	3	35
% Single-Unit Trucks	-	0.0	0.9	1.5	-	0.9	-	0.9	0.5	7.7	-	0.7	-	0.0	0.0	2.1	-	1.3	-	0.0	2.9	2.9	-	1.7	0.8
Articulated Trucks	0	1	11	0	-	12	0	5	7	5	-	17	0	0	1	3	-	4	0	2	1	2	-	5	38
% Articulated Trucks	-	3.6	1.0	0.0	-	1.0	-	1.5	0.3	12.8	-	0.6	-	0.0	14.3	2.1	-	1.7	-	2.6	2.9	2.9	-	2.8	0.9
Bicycles on Road	0	0	0	0	-	0	0	0	0	0	-	0	0	0	0	0	-	0	0	0	0	0	-	0	0
% Bicycles on Road	-	0.0	0.0	0.0	-	0.0	-	0.0	0.0	0.0	-	0.0	-	0.0	0.0	0.0	-	0.0	-	0.0	0.0	0.0	-	0.0	0.0
Pedestrians	-	-	-	-	1	-	-	-	-	-	1	-	-	-	-	-	1	-	-	-	-	-	0	-	-
% Pedestrians	-	-	-	-	100.0	-	-	-	-	-	100.0	-	-	-	-	-	100.0	-	-	-	-	-	-	-	-

Kenig Lindgren O'Hara Aboona, Inc.
9575 W. Higgins Rd., Suite 400

Rosemont, Illinois, United States 60018
(847)518-9990

Count Name: Northgate Parkway and Durable Packaging Access Drive
Site Code:
Start Date: 09/07/2016
Page No: 1

Turning Movement Data

Start Time	Durable Packaging Access Drive Eastbound					Northgate Parkway Northbound					Northgate Parkway Southbound					
	U-Turn	Left	Right	Peds	App. Total	U-Turn	Left	Thru	Peds	App. Total	U-Turn	Thru	Right	Peds	App. Total	Int. Total
6:00 AM	0	1	1	0	2	0	1	47	0	48	1	27	16	0	44	94
6:15 AM	0	2	1	0	3	0	13	49	0	62	0	41	34	0	75	140
6:30 AM	0	2	8	1	10	0	40	83	0	123	0	49	46	0	95	228
6:45 AM	0	2	7	0	9	0	32	88	0	120	0	54	28	0	82	211
Hourly Total	0	7	17	1	24	0	86	267	0	353	1	171	124	0	296	673
7:00 AM	0	33	40	0	73	0	3	116	0	119	0	52	6	0	58	250
7:15 AM	0	10	6	0	16	0	3	122	0	125	0	42	3	0	45	186
7:30 AM	0	1	0	1	1	0	1	147	0	148	0	43	1	0	44	193
7:45 AM	0	5	0	0	5	1	2	155	0	158	1	42	2	0	45	208
Hourly Total	0	49	46	1	95	1	9	540	0	550	1	179	12	0	192	837
8:00 AM	0	1	2	0	3	0	0	144	0	144	0	40	6	0	46	193
8:15 AM	0	0	3	0	3	0	4	133	0	137	0	37	3	0	40	180
8:30 AM	0	1	1	0	2	0	3	132	0	135	0	31	1	0	32	169
8:45 AM	0	2	0	0	2	0	3	119	0	122	0	40	1	0	41	165
Hourly Total	0	4	6	0	10	0	10	528	0	538	0	148	11	0	159	707
*** BREAK ***	-	-	-	-	-	-	-	-	-	-	-	-	-	-	-	-
3:30 PM	0	18	18	0	36	0	4	38	0	42	0	86	1	0	87	165
3:45 PM	0	3	4	0	7	0	2	78	0	80	0	72	0	0	72	159
Hourly Total	0	21	22	0	43	0	6	116	0	122	0	158	1	0	159	324
4:00 PM	0	4	1	0	5	0	0	54	0	54	0	121	1	0	122	181
4:15 PM	0	2	0	1	2	1	0	54	0	55	0	75	0	0	75	132
4:30 PM	0	3	2	0	5	0	2	71	0	73	0	111	0	0	111	189
4:45 PM	0	3	2	0	5	0	1	36	0	37	0	119	3	0	122	164
Hourly Total	0	12	5	1	17	1	3	215	0	219	0	426	4	0	430	666
5:00 PM	0	6	6	0	12	0	0	55	0	55	0	115	0	0	115	182
5:15 PM	0	3	3	0	6	0	0	64	0	64	0	101	0	0	101	171
5:30 PM	0	4	0	0	4	0	0	54	0	54	1	107	0	0	108	166
5:45 PM	0	0	1	0	1	0	1	51	0	52	0	71	0	0	71	124
Hourly Total	0	13	10	0	23	0	1	224	0	225	1	394	0	0	395	643
6:00 PM	0	0	4	0	4	0	0	42	0	42	0	73	3	0	76	122
6:15 PM	0	0	0	4	0	0	0	60	0	60	0	77	1	0	78	138
Grand Total	0	106	110	7	216	2	115	1992	0	2109	3	1626	156	0	1785	4110
Approach %	0.0	49.1	50.9	-	-	0.1	5.5	94.5	-	-	0.2	91.1	8.7	-	-	-
Total %	0.0	2.6	2.7	-	5.3	0.0	2.8	48.5	-	51.3	0.1	39.6	3.8	-	43.4	-
Lights	0	97	105	-	202	2	110	1921	-	2033	3	1567	147	-	1717	3952
% Lights	-	91.5	95.5	-	93.5	100.0	95.7	96.4	-	96.4	100.0	96.4	94.2	-	96.2	96.2
Buses	0	0	0	-	0	0	0	0	-	0	0	5	0	-	5	5
% Buses	-	0.0	0.0	-	0.0	0.0	0.0	0.0	-	0.0	0.0	0.3	0.0	-	0.3	0.1

Single-Unit Trucks	0	3	2	-	5	0	1	35	-	36	0	27	2	-	29	70
% Single-Unit Trucks	-	2.8	1.8	-	2.3	0.0	0.9	1.8	-	1.7	0.0	1.7	1.3	-	1.6	1.7
Articulated Trucks	0	6	3	-	9	0	4	36	-	40	0	24	7	-	31	80
% Articulated Trucks	-	5.7	2.7	-	4.2	0.0	3.5	1.8	-	1.9	0.0	1.5	4.5	-	1.7	1.9
Bicycles on Road	0	0	0	-	0	0	0	0	-	0	0	3	0	-	3	3
% Bicycles on Road	-	0.0	0.0	-	0.0	0.0	0.0	0.0	-	0.0	0.0	0.2	0.0	-	0.2	0.1
Pedestrians	-	-	-	7	-	-	-	-	0	-	-	-	-	0	-	-
% Pedestrians	-	-	-	100.0	-	-	-	-	-	-	-	-	-	-	-	-

Kenig Lindgren O'Hara Aboona, Inc.
9575 W. Higgins Rd., Suite 400

Rosemont, Illinois, United States 60018
(847)518-9990

Count Name: Northgate Parkway and Durable Packaging Access Drive
Site Code:
Start Date: 09/07/2016

Turning Movement Peak Hour Data (7:00 AM)

Start Time	Durable Packaging Access Drive Eastbound					Northgate Parkway Northbound					Northgate Parkway Southbound					
	U-Turn	Left	Right	Peds	App. Total	U-Turn	Left	Thru	Peds	App. Total	U-Turn	Thru	Right	Peds	App. Total	Int. Total
7:00 AM	0	33	40	0	73	0	3	116	0	119	0	52	6	0	58	250
7:15 AM	0	10	6	0	16	0	3	122	0	125	0	42	3	0	45	186
7:30 AM	0	1	0	1	1	0	1	147	0	148	0	43	1	0	44	193
7:45 AM	0	5	0	0	5	1	2	155	0	158	1	42	2	0	45	208
Total	0	49	46	1	95	1	9	540	0	550	1	179	12	0	192	837
Approach %	0.0	51.6	48.4	-	-	0.2	1.6	98.2	-	-	0.5	93.2	6.3	-	-	-
Total %	0.0	5.9	5.5	-	11.4	0.1	1.1	64.5	-	65.7	0.1	21.4	1.4	-	22.9	-
PHF	0.000	0.371	0.288	-	0.325	0.250	0.750	0.871	-	0.870	0.250	0.861	0.500	-	0.828	0.837
Lights	0	47	45	-	92	1	7	519	-	527	1	172	11	-	184	803
% Lights	-	95.9	97.8	-	96.8	100.0	77.8	96.1	-	95.8	100.0	96.1	91.7	-	95.8	95.9
Buses	0	0	0	-	0	0	0	0	-	0	0	0	0	-	0	0
% Buses	-	0.0	0.0	-	0.0	0.0	0.0	0.0	-	0.0	0.0	0.0	0.0	-	0.0	0.0
Single-Unit Trucks	0	0	1	-	1	0	0	12	-	12	0	4	1	-	5	18
% Single-Unit Trucks	-	0.0	2.2	-	1.1	0.0	0.0	2.2	-	2.2	0.0	2.2	8.3	-	2.6	2.2
Articulated Trucks	0	2	0	-	2	0	2	9	-	11	0	3	0	-	3	16
% Articulated Trucks	-	4.1	0.0	-	2.1	0.0	22.2	1.7	-	2.0	0.0	1.7	0.0	-	1.6	1.9
Bicycles on Road	0	0	0	-	0	0	0	0	-	0	0	0	0	-	0	0
% Bicycles on Road	-	0.0	0.0	-	0.0	0.0	0.0	0.0	-	0.0	0.0	0.0	0.0	-	0.0	0.0
Pedestrians	-	-	-	1	-	-	-	-	0	-	-	-	-	0	-	-
% Pedestrians	-	-	-	100.0	-	-	-	-	-	-	-	-	-	-	-	-

Kenig Lindgren O'Hara Aboona, Inc.
9575 W. Higgins Rd., Suite 400

Rosemont, Illinois, United States 60018
(847)518-9990

Count Name: Northgate Parkway and Durable Packaging Access Drive
Site Code:
Start Date: 09/07/2016

Turning Movement Peak Hour Data (4:30 PM)

Start Time	Durable Packaging Access Drive Eastbound					Northgate Parkway Northbound					Northgate Parkway Southbound					
	U-Turn	Left	Right	Peds	App. Total	U-Turn	Left	Thru	Peds	App. Total	U-Turn	Thru	Right	Peds	App. Total	Int. Total
4:30 PM	0	3	2	0	5	0	2	71	0	73	0	111	0	0	111	189
4:45 PM	0	3	2	0	5	0	1	36	0	37	0	119	3	0	122	164
5:00 PM	0	6	6	0	12	0	0	55	0	55	0	115	0	0	115	182
5:15 PM	0	3	3	0	6	0	0	64	0	64	0	101	0	0	101	171
Total	0	15	13	0	28	0	3	226	0	229	0	446	3	0	449	706
Approach %	0.0	53.6	46.4	-	-	0.0	1.3	98.7	-	-	0.0	99.3	0.7	-	-	-
Total %	0.0	2.1	1.8	-	4.0	0.0	0.4	32.0	-	32.4	0.0	63.2	0.4	-	63.6	-
PHF	0.000	0.625	0.542	-	0.583	0.000	0.375	0.796	-	0.784	0.000	0.937	0.250	-	0.920	0.934
Lights	0	13	13	-	26	0	2	219	-	221	0	436	2	-	438	685
% Lights	-	86.7	100.0	-	92.9	-	66.7	96.9	-	96.5	-	97.8	66.7	-	97.6	97.0
Buses	0	0	0	-	0	0	0	0	-	0	0	2	0	-	2	2
% Buses	-	0.0	0.0	-	0.0	-	0.0	0.0	-	0.0	-	0.4	0.0	-	0.4	0.3
Single-Unit Trucks	0	1	0	-	1	0	0	5	-	5	0	3	0	-	3	9
% Single-Unit Trucks	-	6.7	0.0	-	3.6	-	0.0	2.2	-	2.2	-	0.7	0.0	-	0.7	1.3
Articulated Trucks	0	1	0	-	1	0	1	2	-	3	0	5	1	-	6	10
% Articulated Trucks	-	6.7	0.0	-	3.6	-	33.3	0.9	-	1.3	-	1.1	33.3	-	1.3	1.4
Bicycles on Road	0	0	0	-	0	0	0	0	-	0	0	0	0	-	0	0
% Bicycles on Road	-	0.0	0.0	-	0.0	-	0.0	0.0	-	0.0	-	0.0	0.0	-	0.0	0.0
Pedestrians	-	-	-	0	-	-	-	-	0	-	-	-	-	0	-	-
% Pedestrians	-	-	-	-	-	-	-	-	-	-	-	-	-	-	-	-

Preliminary Site Plan

Warehouse/Distribution Facility
Wheeling, Illinois

KLOA
Kenig, Lindgren, O'Hara, Aboona, Inc.

PROJECT DATA:

SITE AREA:	
GROSS:	13.95 AC (607,585 SF)
DETENTION:	1.57 AC (68,431 SF) @11%
NET:	12.4 AC (539,154 SF)
	(LESS WETLANDS, DETENTION & AREA N.I.C.)
TOTAL BUILDING AREA:	181,049 SF
COVERAGE:	33.58% (NET)
PARKING REQUIRED:	272 STALLS 1.5/1000 SF (25% REDUCTION FOR BUILDINGS IN EXCESS OF 80,000 SF)
PARKING PROPOSED:	197 STALLS @1.09/1000 SF
WITH LANDBANK:	287 STALLS @1.59/1000 SF
TRUCK - COURT:	100 STALLS
DRIVE-IN DOORS:	2 POSITIONS
DOCK DOORS:	35 POSITIONS

SITE LEGEND:

◀ DOCK HIGH TRUCK DOOR

O GRADE LEVEL TRUCK DOOR

HAMILTON PARTNERS

scheme: 09

Conceptual Site Plan

800 Northgate Parkway
Wheeling, Illinois

This conceptual design is based upon a preliminary review of entitlement requirements and on unverified and possibly incomplete site and/or building information, and is intended merely to assist in exploring how the project might be developed.

1" = 60'

0 30 60 120 300

NORTH

WARE MALCOMB

CHI16-0026-00
08.26.2016

SHEET
#1

Year 2040 CMAP Letter

Warehouse/Distribution Facility
Wheeling, Illinois

KLOA
Kenig, Lindgren, O'Hara, Aboona, Inc.

Chicago Metropolitan
Agency for Planning

233 South Wacker Drive
Suite 800
Chicago, Illinois 60606

312 454 0400
www.cmap.illinois.gov

September 16, 2016

Nicholas J. Butler
Consultant
Kenig, Lindgren, O'Hara and Aboona, Inc.
9575 West Higgins Road
Suite 400
Rosemont, IL 60018

Subject: Lake Cook Road @ Northgate Parkway
Cook County DOT

Dear Mr. Butler:

In response to a request made on your behalf and dated September 16, 2016, we have developed year 2040 average daily traffic (ADT) projections for the subject location.

ROAD SEGMENT	Year 2014 ADT	Year 2040 ADT
Lake Cook Rd east of Northgate Pkwy	39,400	45,500
Lake Cook Rd west of Northgate Pkwy	37,200	44,200

Traffic projections are developed using existing ADT data provided in the request letter and the results from the March 2016 CMAP Travel Demand Analysis. The regional travel model uses CMAP 2040 socioeconomic projections and assumes the implementation of the GO TO 2040 Comprehensive Regional Plan for the Northeastern Illinois area.

If you have any questions, please call me at (312) 386-8806.

Sincerely,

Jose Rodriguez, PTP, AICP
Senior Planner, Research & Analysis

cc: Yonan (Cook County DOTH)
S:\AdminGroups\ResearchAnalysis\SmallAreaTrafficForecasts_CY16\Wheeling\ck-73-16\ck-73-16.docx

Level of Service Criteria

Warehouse/Distribution Facility
Wheeling, Illinois

KLOA
Kenig, Lindgren, O'Hara, Aboona, Inc.

LEVEL OF SERVICE CRITERIA

Signalized Intersections

Level of Service	Interpretation	Average Control Delay (seconds per vehicle)
A	Favorable progression. Most vehicles arrive during the green indication and travel through the intersection without stopping.	≤10
B	Good progression, with more vehicles stopping than for Level of Service A.	>10 - 20
C	Individual cycle failures (i.e., one or more queued vehicles are not able to depart as a result of insufficient capacity during the cycle) may begin to appear. Number of vehicles stopping is significant, although many vehicles still pass through the intersection without stopping.	>20 - 35
D	The volume-to-capacity ratio is high and either progression is ineffective or the cycle length is too long. Many vehicles stop and individual cycle failures are noticeable.	>35 - 55
E	Progression is unfavorable. The volume-to-capacity ratio is high and the cycle length is long. Individual cycle failures are frequent.	>55 - 80
F	The volume-to-capacity ratio is very high, progression is very poor and the cycle length is long. Most cycles fail to clear the queue.	>80.0

Unsignalized Intersections

Level of Service	Average Total Delay (SEC/VEH)
A	0 - 10
B	> 10 - 15
C	> 15 - 25
D	> 25 - 35
E	> 35 - 50
F	> 50

Source: *Highway Capacity Manual*, 2010.

Capacity Analysis Summary Sheets

Warehouse/Distribution Facility
Wheeling, Illinois

KLOA
Kenig, Lindgren, O'Hara, Aboona, Inc.

Lanes, Volumes, Timings
3: Northgate Parkway & Lake Cook Road

9/22/2016

Lane Group	EBL	EBT	EBR	WBL	WBT	WBR	NBL	NBT	NBR	SBL	SBT	SBR
Lane Configurations												
Volume (vph)	53	2727	55	137	917	52	82	57	450	28	10	29
Ideal Flow (vphpl)	1900	2000	1900	1900	2000	1900	1900	2000	1900	1900	2000	1900
Storage Length (ft)	210		235	235		235	140		140	0		0
Storage Lanes	1		1	1		1	1		1	1		1
Taper Length (ft)	160			175			160			70		
Lane Util. Factor	1.00	0.91	1.00	1.00	0.91	1.00	1.00	1.00	1.00	1.00	1.00	1.00
Frt			0.850			0.850			0.850			0.850
Flt Protected	0.950			0.950			0.950			0.950		
Satd. Flow (prot)	1770	5353	1538	1752	5250	1583	1719	2000	1553	1736	2000	1468
Flt Permitted	0.270			0.049			0.516			0.717		
Satd. Flow (perm)	503	5353	1538	90	5250	1583	934	2000	1553	1310	2000	1468
Right Turn on Red			Yes			Yes			Yes			Yes
Satd. Flow (RTOR)			51			55			119			51
Link Speed (mph)		45			45			30			30	
Link Distance (ft)		1186			1274			454			346	
Travel Time (s)		18.0			19.3			10.3			7.9	
Peak Hour Factor	0.94	0.94	0.94	0.94	0.94	0.94	0.94	0.94	0.94	0.94	0.94	0.94
Heavy Vehicles (%)	2%	2%	5%	3%	4%	2%	5%	0%	4%	4%	0%	10%
Shared Lane Traffic (%)												
Lane Group Flow (vph)	56	2901	59	146	976	55	87	61	479	30	11	31
Turn Type	pm+pt	NA	pm+ov	pm+pt	NA	pm+ov	pm+pt	NA	pm+ov	pm+pt	NA	pm+ov
Protected Phases	5	2	3	1	6	7	3	8	1	7	4	5
Permitted Phases	2		2	6		6	8		8	4		4
Detector Phase	5	2	3	1	6	7	3	8	1	7	4	5
Switch Phase												
Minimum Initial (s)	3.0	15.0	3.0	3.0	15.0	3.0	3.0	8.0	3.0	3.0	8.0	3.0
Minimum Split (s)	7.0	21.0	7.0	7.0	21.0	7.0	7.0	14.0	7.0	7.0	14.0	7.0
Total Split (s)	14.0	83.0	15.0	14.0	83.0	15.0	15.0	28.0	14.0	15.0	28.0	14.0
Total Split (%)	10.0%	59.3%	10.7%	10.0%	59.3%	10.7%	10.7%	20.0%	10.0%	10.7%	20.0%	10.0%
Yellow Time (s)	3.5	4.5	3.5	3.5	4.5	3.5	3.5	4.5	3.5	3.5	4.5	3.5
All-Red Time (s)	0.0	1.5	0.0	0.0	1.5	0.0	0.0	1.5	0.0	0.0	1.5	0.0
Lost Time Adjust (s)	0.0	0.0	0.0	0.0	0.0	0.0	0.0	0.0	0.0	0.0	0.0	0.0
Total Lost Time (s)	3.5	6.0	3.5	3.5	6.0	3.5	3.5	6.0	3.5	3.5	6.0	3.5
Lead/Lag	Lead	Lag	Lead	Lead	Lag	Lead	Lead	Lag	Lead	Lead	Lag	Lead
Lead-Lag Optimize?												
Recall Mode	None	Min	None	None	Min	None	None	Max	None	None	None	None
Act Effct Green (s)	86.4	77.1	106.8	93.3	82.7	96.3	33.2	22.0	38.5	16.2	12.6	16.9
Actuated g/C Ratio	0.64	0.57	0.80	0.69	0.62	0.72	0.25	0.16	0.29	0.12	0.09	0.13
v/c Ratio	0.14	0.94	0.05	0.76	0.30	0.05	0.24	0.19	0.90	0.16	0.06	0.14
Control Delay	8.2	35.0	2.2	54.8	13.4	1.8	41.0	51.5	56.7	46.8	53.7	5.2
Queue Delay	0.0	0.0	0.0	0.0	0.0	0.0	0.0	0.0	0.0	0.0	0.0	0.0
Total Delay	8.2	35.0	2.2	54.8	13.4	1.8	41.0	51.5	56.7	46.8	53.7	5.2
LOS	A	D	A	D	B	A	D	D	E	D	D	A
Approach Delay		33.9			18.0			54.0			29.9	
Approach LOS		C			B			D			C	
Queue Length 50th (ft)	15	859	1	76	151	0	60	47	325	26	9	0
Queue Length 95th (ft)	31	#1006	16	#191	191	13	107	93	#551	46	28	13
Internal Link Dist (ft)		1106			1194			374			266	

Lane Group	EBL	EBT	EBR	WBL	WBT	WBR	NBL	NBT	NBR	SBL	SBT	SBR
Turn Bay Length (ft)	210		235	235		235	140		140			
Base Capacity (vph)	436	3072	1233	192	3232	1195	369	327	530	233	327	267
Starvation Cap Reductn	0	0	0	0	0	0	0	0	0	0	0	0
Spillback Cap Reductn	0	0	0	0	0	0	0	0	0	0	0	0
Storage Cap Reductn	0	0	0	0	0	0	0	0	0	0	0	0
Reduced v/c Ratio	0.13	0.94	0.05	0.76	0.30	0.05	0.24	0.19	0.90	0.13	0.03	0.12

Intersection Summary

Area Type: Other
Cycle Length: 140
Actuated Cycle Length: 134.3
Natural Cycle: 90
Control Type: Actuated-Uncoordinated
Maximum v/c Ratio: 0.94
Intersection Signal Delay: 32.6 Intersection LOS: C
Intersection Capacity Utilization 92.9% ICU Level of Service F
Analysis Period (min) 15
95th percentile volume exceeds capacity, queue may be longer.
Queue shown is maximum after two cycles.

Splits and Phases: 3: Northgate Parkway & Lake Cook Road

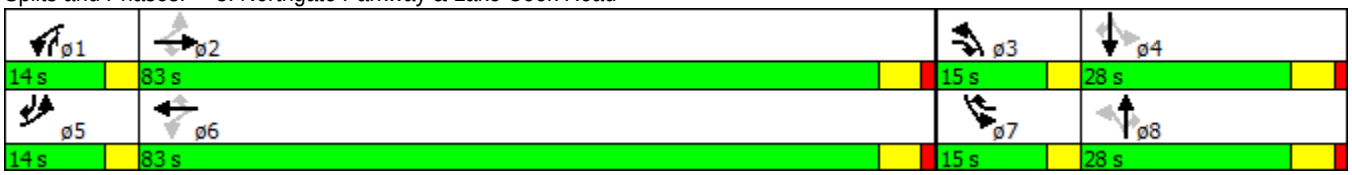

HCM Unsignalized Intersection Capacity Analysis
2: Durable Packaging Access Drive & Northgate Parkway

9/22/2016

Movement	EBL	EBR	NBL	NBT	SBT	SBR
Lane Configurations						
Volume (veh/h)	49	46	9	540	190	12
Sign Control	Stop			Free	Free	
Grade	0%			0%	0%	
Peak Hour Factor	0.84	0.84	0.84	0.84	0.84	0.84
Hourly flow rate (vph)	58	55	11	643	226	14
Pedestrians						
Lane Width (ft)						
Walking Speed (ft/s)						
Percent Blockage						
Right turn flare (veh)						
Median type				None	None	
Median storage veh)						
Upstream signal (ft)					454	
pX, platoon unblocked	0.98	0.98	0.98			
vC, conflicting volume	890	226	240			
vC1, stage 1 conf vol						
vC2, stage 2 conf vol						
vCu, unblocked vol	878	199	214			
tC, single (s)	6.4	6.2	4.3			
tC, 2 stage (s)						
tF (s)	3.5	3.3	2.4			
p0 queue free %	81	93	99			
cM capacity (veh/h)	307	824	1220			

Direction, Lane #	EB 1	NB 1	SB 1	SB 2
Volume Total	113	654	226	14
Volume Left	58	11	0	0
Volume Right	55	0	0	14
cSH	441	1220	1700	1700
Volume to Capacity	0.26	0.01	0.13	0.01
Queue Length 95th (ft)	25	1	0	0
Control Delay (s)	16.0	0.2	0.0	0.0
Lane LOS	C	A		
Approach Delay (s)	16.0	0.2	0.0	
Approach LOS	C			

Intersection Summary			
Average Delay	1.9		
Intersection Capacity Utilization	47.8%	ICU Level of Service	A
Analysis Period (min)	15		

Lanes, Volumes, Timings
3: Northgate Parkway & Lake Cook Road

9/22/2016

Lane Group	EBL	EBT	EBR	WBL	WBT	WBR	NBL	NBT	NBR	SBL	SBT	SBR
Lane Configurations												
Volume (vph)	28	1096	66	349	2310	39	86	7	148	78	34	69
Ideal Flow (vphpl)	1900	2000	1900	1900	2000	1900	1900	2000	1900	1900	2000	1900
Storage Length (ft)	210		235	235		235	140		140	0		0
Storage Lanes	1		1	1		1	1		1	1		1
Taper Length (ft)	160			175			160			70		
Lane Util. Factor	1.00	0.91	1.00	1.00	0.91	1.00	1.00	1.00	1.00	1.00	1.00	1.00
Frt			0.850			0.850			0.850			0.850
Flt Protected	0.950			0.950			0.950			0.950		
Satd. Flow (prot)	1736	5353	1568	1752	5406	1335	1805	1754	1553	1736	1887	1509
Flt Permitted	0.050			0.196						0.702		
Satd. Flow (perm)	91	5353	1568	362	5406	1335	1900	1754	1553	1282	1887	1509
Right Turn on Red			Yes			Yes			Yes			Yes
Satd. Flow (RTOR)			73			47			154			73
Link Speed (mph)		45			45			30			30	
Link Distance (ft)		1186			1274			454			346	
Travel Time (s)		18.0			19.3			10.3			7.9	
Peak Hour Factor	0.96	0.96	0.96	0.96	0.96	0.96	0.96	0.96	0.96	0.96	0.96	0.96
Heavy Vehicles (%)	4%	2%	3%	3%	1%	21%	0%	14%	4%	4%	6%	7%
Shared Lane Traffic (%)												
Lane Group Flow (vph)	29	1142	69	364	2406	41	90	7	154	81	35	72
Turn Type	pm+pt	NA	pm+ov	pm+pt	NA	pm+ov	pm+pt	NA	pm+ov	pm+pt	NA	pm+ov
Protected Phases	5	2	3	1	6	7	3	8	1	7	4	5
Permitted Phases	2		2	6		6	8		8	4		4
Detector Phase	5	2	3	1	6	7	3	8	1	7	4	5
Switch Phase												
Minimum Initial (s)	3.0	15.0	3.0	3.0	15.0	3.0	3.0	8.0	3.0	3.0	8.0	3.0
Minimum Split (s)	7.0	21.0	7.0	7.0	21.0	7.0	7.0	14.0	7.0	7.0	14.0	7.0
Total Split (s)	15.0	80.0	20.0	30.0	95.0	20.0	20.0	20.0	30.0	20.0	20.0	15.0
Total Split (%)	10.0%	53.3%	13.3%	20.0%	63.3%	13.3%	13.3%	13.3%	20.0%	13.3%	13.3%	10.0%
Yellow Time (s)	3.5	4.5	3.5	3.5	4.5	3.5	3.5	4.5	3.5	3.5	4.5	3.5
All-Red Time (s)	0.0	1.5	0.0	0.0	1.5	0.0	0.0	1.5	0.0	0.0	1.5	0.0
Lost Time Adjust (s)	0.0	0.0	0.0	0.0	0.0	0.0	0.0	0.0	0.0	0.0	0.0	0.0
Total Lost Time (s)	3.5	6.0	3.5	3.5	6.0	3.5	3.5	6.0	3.5	3.5	6.0	3.5
Lead/Lag	Lead	Lag	Lead	Lead	Lag	Lead	Lead	Lag	Lead	Lead	Lag	Lead
Lead-Lag Optimize?												
Recall Mode	None	Min	None	Min	Min	None	None	None	Min	None	None	None
Act Effct Green (s)	87.4	78.7	96.5	101.4	91.3	115.7	14.3	8.9	19.8	20.0	9.4	15.2
Actuated g/C Ratio	0.68	0.61	0.75	0.78	0.71	0.90	0.11	0.07	0.15	0.15	0.07	0.12
v/c Ratio	0.21	0.35	0.06	0.79	0.63	0.03	0.45	0.06	0.42	0.31	0.26	0.30
Control Delay	11.7	15.5	1.9	23.1	13.2	0.7	60.8	63.1	9.6	50.1	66.1	14.3
Queue Delay	0.0	0.0	0.0	0.0	0.0	0.0	0.0	0.0	0.0	0.0	0.0	0.0
Total Delay	11.7	15.5	1.9	23.1	13.2	0.7	60.8	63.1	9.6	50.1	66.1	14.3
LOS	B	B	A	C	B	A	E	E	A	D	E	B
Approach Delay		14.6			14.3			29.5			39.4	
Approach LOS		B			B			C			D	
Queue Length 50th (ft)	6	188	0	91	442	0	77	6	0	60	30	0
Queue Length 95th (ft)	17	285	16	232	573	7	122	24	53	113	70	45
Internal Link Dist (ft)		1106			1194			374			266	

Lane Group	EBL	EBT	EBR	WBL	WBT	WBR	NBL	NBT	NBR	SBL	SBT	SBR
Turn Bay Length (ft)	210		235	235		235	140		140			
Base Capacity (vph)	214	3260	1247	573	3820	1216	272	192	480	311	207	302
Starvation Cap Reductn	0	0	0	0	0	0	0	0	0	0	0	0
Spillback Cap Reductn	0	0	0	0	0	0	0	0	0	0	0	0
Storage Cap Reductn	0	0	0	0	0	0	0	0	0	0	0	0
Reduced v/c Ratio	0.14	0.35	0.06	0.64	0.63	0.03	0.33	0.04	0.32	0.26	0.17	0.24

Intersection Summary

Area Type: Other
Cycle Length: 150
Actuated Cycle Length: 129.2
Natural Cycle: 60
Control Type: Actuated-Uncoordinated
Maximum v/c Ratio: 0.79
Intersection Signal Delay: 16.3 Intersection LOS: B
Intersection Capacity Utilization 70.5% ICU Level of Service C
Analysis Period (min) 15

Splits and Phases: 3: Northgate Parkway & Lake Cook Road

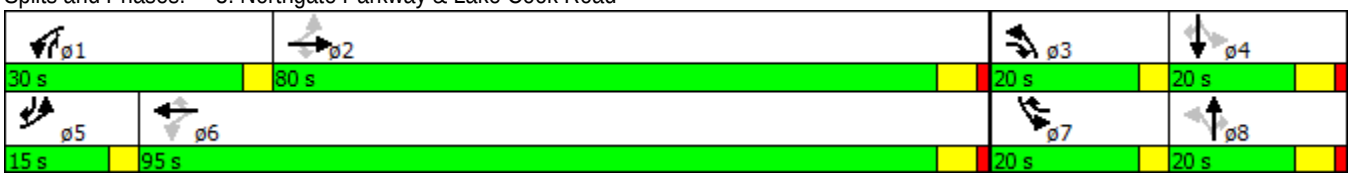

HCM Unsignalized Intersection Capacity Analysis
2: Durable Packaging Access Drive & Northgate Parkway

9/22/2016

Movement	EBL	EBR	NBL	NBT	SBT	SBR
Lane Configurations						
Volume (veh/h)	15	13	3	226	446	3
Sign Control	Stop			Free	Free	
Grade	0%			0%	0%	
Peak Hour Factor	0.93	0.93	0.93	0.93	0.93	0.93
Hourly flow rate (vph)	16	14	3	243	480	3
Pedestrians						
Lane Width (ft)						
Walking Speed (ft/s)						
Percent Blockage						
Right turn flare (veh)						
Median type				None	None	
Median storage veh)						
Upstream signal (ft)					454	
pX, platoon unblocked	0.92	0.92	0.92			
vC, conflicting volume	729	480	483			
vC1, stage 1 conf vol						
vC2, stage 2 conf vol						
vCu, unblocked vol	661	389	393			
tC, single (s)	6.5	6.2	4.4			
tC, 2 stage (s)						
tF (s)	3.6	3.3	2.5			
p0 queue free %	96	98	100			
cM capacity (veh/h)	376	610	933			

Direction, Lane #	EB 1	NB 1	SB 1	SB 2
Volume Total	30	246	480	3
Volume Left	16	3	0	0
Volume Right	14	0	0	3
cSH	457	933	1700	1700
Volume to Capacity	0.07	0.00	0.28	0.00
Queue Length 95th (ft)	5	0	0	0
Control Delay (s)	13.4	0.2	0.0	0.0
Lane LOS	B	A		
Approach Delay (s)	13.4	0.2	0.0	
Approach LOS	B			

Intersection Summary			
Average Delay	0.6		
Intersection Capacity Utilization	33.5%	ICU Level of Service	A
Analysis Period (min)	15		

Lanes, Volumes, Timings
3: Northgate Parkway & Lake Cook Road

9/30/2016

Lane Group	EBL	EBT	EBR	WBL	WBT	WBR	NBL	NBT	NBR	SBL	SBT	SBR
Lane Configurations												
Volume (vph)	53	2850	85	180	958	52	107	57	479	28	10	29
Ideal Flow (vphpl)	1900	2000	1900	1900	2000	1900	1900	2000	1900	1900	2000	1900
Storage Length (ft)	210		235	235		235	140		140	0		0
Storage Lanes	1		1	1		1	1		1	1		1
Taper Length (ft)	160			175			160			70		
Lane Util. Factor	1.00	0.91	1.00	1.00	0.91	1.00	1.00	1.00	1.00	1.00	1.00	1.00
Frt			0.850			0.850			0.850			0.850
Flt Protected	0.950			0.950			0.950			0.950		
Satd. Flow (prot)	1770	5353	1524	1703	5250	1583	1736	2000	1553	1736	2000	1468
Flt Permitted	0.260			0.049			0.514			0.718		
Satd. Flow (perm)	484	5353	1524	88	5250	1583	939	2000	1553	1312	2000	1468
Right Turn on Red			Yes			Yes			Yes			Yes
Satd. Flow (RTOR)			67			55			120			51
Link Speed (mph)		45			45			30			30	
Link Distance (ft)		1186			1274			454			346	
Travel Time (s)		18.0			19.3			10.3			7.9	
Peak Hour Factor	0.95	0.95	0.95	0.95	0.95	0.95	0.95	0.95	0.95	0.95	0.95	0.95
Heavy Vehicles (%)	2%	2%	6%	6%	4%	2%	4%	0%	4%	4%	0%	10%
Shared Lane Traffic (%)												
Lane Group Flow (vph)	56	3000	89	189	1008	55	113	60	504	29	11	31
Turn Type	pm+pt	NA	pm+ov	pm+pt	NA	pm+ov	pm+pt	NA	pm+ov	pm+pt	NA	pm+ov
Protected Phases	5	2	3	1	6	7	3	8	1	7	4	5
Permitted Phases	2		2	6		6	8		8	4		4
Detector Phase	5	2	3	1	6	7	3	8	1	7	4	5
Switch Phase												
Minimum Initial (s)	3.0	15.0	3.0	3.0	15.0	3.0	3.0	8.0	3.0	3.0	8.0	3.0
Minimum Split (s)	7.0	21.0	7.0	7.0	21.0	7.0	7.0	14.0	7.0	7.0	14.0	7.0
Total Split (s)	14.0	83.0	15.0	14.0	83.0	15.0	15.0	28.0	14.0	15.0	28.0	14.0
Total Split (%)	10.0%	59.3%	10.7%	10.0%	59.3%	10.7%	10.7%	20.0%	10.0%	10.7%	20.0%	10.0%
Yellow Time (s)	3.5	4.5	3.5	3.5	4.5	3.5	3.5	4.5	3.5	3.5	4.5	3.5
All-Red Time (s)	0.0	1.5	0.0	0.0	1.5	0.0	0.0	1.5	0.0	0.0	1.5	0.0
Lost Time Adjust (s)	0.0	0.0	0.0	0.0	0.0	0.0	0.0	0.0	0.0	0.0	0.0	0.0
Total Lost Time (s)	3.5	6.0	3.5	3.5	6.0	3.5	3.5	6.0	3.5	3.5	6.0	3.5
Lead/Lag	Lead	Lag	Lead	Lead	Lag	Lead	Lead	Lag	Lead	Lead	Lag	Lead
Lead-Lag Optimize?												
Recall Mode	None	Min	None	None	Min	None	None	Max	None	None	None	None
Act Effct Green (s)	86.5	77.1	106.8	93.3	82.8	96.3	33.2	22.0	38.6	16.1	12.5	16.8
Actuated g/C Ratio	0.64	0.57	0.80	0.69	0.62	0.72	0.25	0.16	0.29	0.12	0.09	0.13
v/c Ratio	0.15	0.98	0.07	1.01	0.31	0.05	0.30	0.18	0.95	0.16	0.06	0.14
Control Delay	8.2	39.8	2.3	104.8	13.5	1.8	42.3	51.4	64.5	46.6	53.7	5.2
Queue Delay	0.0	0.0	0.0	0.0	0.0	0.0	0.0	0.0	0.0	0.0	0.0	0.0
Total Delay	8.2	39.8	2.3	104.8	13.5	1.8	42.3	51.4	64.5	46.6	53.7	5.2
LOS	A	D	A	F	B	A	D	D	E	D	D	A
Approach Delay		38.2			26.7			59.6			29.6	
Approach LOS		D			C			E			C	
Queue Length 50th (ft)	15	924	2	~127	157	0	79	47	354	25	9	0
Queue Length 95th (ft)	31	#1108	23	#294	197	13	134	92	#597	46	28	13
Internal Link Dist (ft)		1106			1194			374			266	

Lane Group	EBL	EBT	EBR	WBL	WBT	WBR	NBL	NBT	NBR	SBL	SBT	SBR
Turn Bay Length (ft)	210		235	235		235	140		140			
Base Capacity (vph)	425	3074	1225	187	3235	1196	373	328	531	232	328	267
Starvation Cap Reductn	0	0	0	0	0	0	0	0	0	0	0	0
Spillback Cap Reductn	0	0	0	0	0	0	0	0	0	0	0	0
Storage Cap Reductn	0	0	0	0	0	0	0	0	0	0	0	0
Reduced v/c Ratio	0.13	0.98	0.07	1.01	0.31	0.05	0.30	0.18	0.95	0.13	0.03	0.12

Intersection Summary

Area Type: Other
Cycle Length: 140
Actuated Cycle Length: 134.3
Natural Cycle: 100
Control Type: Actuated-Uncoordinated
Maximum v/c Ratio: 1.01
Intersection Signal Delay: 38.1 Intersection LOS: D
Intersection Capacity Utilization 97.0% ICU Level of Service F
Analysis Period (min) 15
~ Volume exceeds capacity, queue is theoretically infinite.
Queue shown is maximum after two cycles.
95th percentile volume exceeds capacity, queue may be longer.
Queue shown is maximum after two cycles.

Splits and Phases: 3: Northgate Parkway & Lake Cook Road

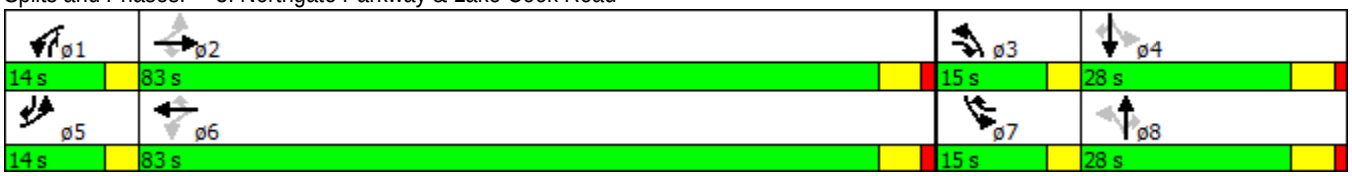

HCM Unsignalized Intersection Capacity Analysis
2: Northgate Parkway & Durable Packaging Access Drive

10/3/2016

Movement	EBL	EBR	NBL	NBT	SBT	SBR
Lane Configurations						
Volume (veh/h)	49	46	9	594	263	12
Sign Control	Stop			Free	Free	
Grade	0%			0%	0%	
Peak Hour Factor	0.84	0.84	0.84	0.84	0.84	0.84
Hourly flow rate (vph)	58	55	11	707	313	14
Pedestrians						
Lane Width (ft)						
Walking Speed (ft/s)						
Percent Blockage						
Right turn flare (veh)						
Median type				None	None	
Median storage veh)						
Upstream signal (ft)					454	
pX, platoon unblocked	0.96	0.96	0.96			
vC, conflicting volume	1042	313	327			
vC1, stage 1 conf vol						
vC2, stage 2 conf vol						
vCu, unblocked vol	1024	267	282			
tC, single (s)	6.4	6.2	4.3			
tC, 2 stage (s)						
tF (s)	3.5	3.3	2.4			
p0 queue free %	76	93	99			
cM capacity (veh/h)	247	743	1130			

Direction, Lane #	EB 1	NB 1	SB 1	SB 2
Volume Total	113	718	313	14
Volume Left	58	11	0	0
Volume Right	55	0	0	14
cSH	364	1130	1700	1700
Volume to Capacity	0.31	0.01	0.18	0.01
Queue Length 95th (ft)	32	1	0	0
Control Delay (s)	19.3	0.3	0.0	0.0
Lane LOS	C	A		
Approach Delay (s)	19.3	0.3	0.0	
Approach LOS	C			

Intersection Summary			
Average Delay	2.0		
Intersection Capacity Utilization	50.7%	ICU Level of Service	A
Analysis Period (min)	15		

Movement	EBL	EBT	EBR	WBL	WBT	WBR	NBL	NBT	NBR	SBL	SBT	SBR
Lane Configurations												
Volume (veh/h)	4	0	0	5	0	5	3	596	5	5	273	17
Sign Control		Stop			Stop			Free			Free	
Grade		0%			0%			0%			0%	
Peak Hour Factor	0.95	0.95	0.95	0.95	0.95	0.95	0.95	0.95	0.95	0.95	0.95	0.95
Hourly flow rate (vph)	4	0	0	5	0	5	3	627	5	5	287	18
Pedestrians												
Lane Width (ft)												
Walking Speed (ft/s)												
Percent Blockage												
Right turn flare (veh)												
Median type								None			None	
Median storage veh)												
Upstream signal (ft)											1073	
pX, platoon unblocked												
vC, conflicting volume	948	946	296	943	952	630	305			633		
vC1, stage 1 conf vol												
vC2, stage 2 conf vol												
vCu, unblocked vol	948	946	296	943	952	630	305			633		
tC, single (s)	7.6	6.5	7.2	8.1	7.5	7.2	4.4			5.1		
tC, 2 stage (s)												
tF (s)	4.0	4.0	4.2	4.4	4.9	4.2	2.5			3.1		
p0 queue free %	98	100	100	97	100	98	100			99		
cM capacity (veh/h)	193	259	561	164	178	343	1099			615		

Direction, Lane #	EB 1	WB 1	NB 1	SB 1
Volume Total	4	11	636	311
Volume Left	4	5	3	5
Volume Right	0	5	5	18
cSH	193	222	1099	615
Volume to Capacity	0.02	0.05	0.00	0.01
Queue Length 95th (ft)	2	4	0	1
Control Delay (s)	24.0	22.0	0.1	0.3
Lane LOS	C	C	A	A
Approach Delay (s)	24.0	22.0	0.1	0.3
Approach LOS	C	C		

Intersection Summary			
Average Delay	0.5		
Intersection Capacity Utilization	43.3%	ICU Level of Service	A
Analysis Period (min)	15		

Movement	EBL	EBR	NBL	NBT	SBT	SBR
Lane Configurations						
Volume (veh/h)	6	1	3	597	289	20
Sign Control	Stop			Free	Free	
Grade	0%			0%	0%	
Peak Hour Factor	0.95	0.95	0.95	0.95	0.95	0.95
Hourly flow rate (vph)	6	1	3	628	304	21
Pedestrians						
Lane Width (ft)						
Walking Speed (ft/s)						
Percent Blockage						
Right turn flare (veh)						
Median type				None	None	
Median storage veh)						
Upstream signal (ft)					583	
pX, platoon unblocked	0.98	0.98	0.98			
vC, conflicting volume	949	315	325			
vC1, stage 1 conf vol						
vC2, stage 2 conf vol						
vCu, unblocked vol	939	291	302			
tC, single (s)	6.4	6.2	4.1			
tC, 2 stage (s)						
tF (s)	3.5	3.3	2.2			
p0 queue free %	98	100	100			
cM capacity (veh/h)	289	738	1246			

Direction, Lane #	EB 1	NB 1	SB 1
Volume Total	7	632	325
Volume Left	6	3	0
Volume Right	1	0	21
cSH	317	1246	1700
Volume to Capacity	0.02	0.00	0.19
Queue Length 95th (ft)	2	0	0
Control Delay (s)	16.6	0.1	0.0
Lane LOS	C	A	
Approach Delay (s)	16.6	0.1	0.0
Approach LOS	C		

Intersection Summary			
Average Delay	0.2		
Intersection Capacity Utilization	43.8%	ICU Level of Service	A
Analysis Period (min)	15		

Lanes, Volumes, Timings
3: Northgate Parkway & Lake Cook Road

9/30/2016

Lane Group	EBL	EBT	EBR	WBL	WBT	WBR	NBL	NBT	NBR	SBL	SBT	SBR
Lane Configurations												
Volume (vph)	28	1145	102	390	2414	39	123	7	199	78	34	69
Ideal Flow (vphpl)	1900	2000	1900	1900	2000	1900	1900	2000	1900	1900	2000	1900
Storage Length (ft)	210		235	235		235	140		140	0		0
Storage Lanes	1		1	1		1	1		1	1		1
Taper Length (ft)	160			175			160			70		
Lane Util. Factor	1.00	0.91	1.00	1.00	0.91	1.00	1.00	1.00	1.00	1.00	1.00	1.00
Frt			0.850			0.850			0.850			0.850
Flt Protected	0.950			0.950			0.950			0.950		
Satd. Flow (prot)	1736	5353	1553	1752	5406	1335	1770	1770	1524	1736	1905	1509
Flt Permitted	0.052			0.173						0.678		
Satd. Flow (perm)	95	5353	1553	319	5406	1335	1863	1770	1524	1239	1905	1509
Right Turn on Red			Yes			Yes			Yes			Yes
Satd. Flow (RTOR)			106			47			149			73
Link Speed (mph)		45			45			30			30	
Link Distance (ft)		1186			1274			454			346	
Travel Time (s)		18.0			19.3			10.3			7.9	
Peak Hour Factor	0.96	0.96	0.96	0.96	0.96	0.96	0.96	0.96	0.96	0.96	0.96	0.96
Heavy Vehicles (%)	4%	2%	4%	3%	1%	21%	2%	13%	6%	4%	5%	7%
Shared Lane Traffic (%)												
Lane Group Flow (vph)	29	1193	106	406	2515	41	128	7	207	81	35	72
Turn Type	pm+pt	NA	pm+ov	pm+pt	NA	pm+ov	pm+pt	NA	pm+ov	pm+pt	NA	pm+ov
Protected Phases	5	2	3	1	6	7	3	8	1	7	4	5
Permitted Phases	2		2	6		6	8		8	4		4
Detector Phase	5	2	3	1	6	7	3	8	1	7	4	5
Switch Phase												
Minimum Initial (s)	3.0	15.0	3.0	3.0	15.0	3.0	3.0	8.0	3.0	3.0	8.0	3.0
Minimum Split (s)	7.0	21.0	7.0	7.0	21.0	7.0	7.0	14.0	7.0	7.0	14.0	7.0
Total Split (s)	15.0	80.0	20.0	30.0	95.0	20.0	20.0	20.0	30.0	20.0	20.0	15.0
Total Split (%)	10.0%	53.3%	13.3%	20.0%	63.3%	13.3%	13.3%	13.3%	20.0%	13.3%	13.3%	10.0%
Yellow Time (s)	3.5	4.5	3.5	3.5	4.5	3.5	3.5	4.5	3.5	3.5	4.5	3.5
All-Red Time (s)	0.0	1.5	0.0	0.0	1.5	0.0	0.0	1.5	0.0	0.0	1.5	0.0
Lost Time Adjust (s)	0.0	0.0	0.0	0.0	0.0	0.0	0.0	0.0	0.0	0.0	0.0	0.0
Total Lost Time (s)	3.5	6.0	3.5	3.5	6.0	3.5	3.5	6.0	3.5	3.5	6.0	3.5
Lead/Lag	Lead	Lag	Lead	Lead	Lag	Lead	Lead	Lag	Lead	Lead	Lag	Lead
Lead-Lag Optimize?												
Recall Mode	None	Min	None	Min	Min	None	None	None	Min	None	None	None
Act Effct Green (s)	84.4	75.7	95.7	102.8	92.8	122.2	16.9	9.1	24.6	25.1	9.4	18.2
Actuated g/C Ratio	0.62	0.56	0.70	0.76	0.68	0.90	0.12	0.07	0.18	0.18	0.07	0.13
v/c Ratio	0.22	0.40	0.09	0.88	0.68	0.03	0.58	0.06	0.52	0.26	0.27	0.27
Control Delay	13.1	19.7	1.8	39.0	16.0	0.7	66.9	64.6	19.4	48.6	69.1	13.7
Queue Delay	0.0	0.0	0.0	0.0	0.0	0.0	0.0	0.0	0.0	0.0	0.0	0.0
Total Delay	13.1	19.7	1.8	39.0	16.0	0.7	66.9	64.6	19.4	48.6	69.1	13.7
LOS	B	B	A	D	B	A	E	E	B	D	E	B
Approach Delay		18.1			18.9			38.1			39.1	
Approach LOS		B			B			D			D	
Queue Length 50th (ft)	7	245	0	179	524	0	116	6	47	63	32	0
Queue Length 95th (ft)	17	304	21	#363	631	7	165	23	111	113	70	46
Internal Link Dist (ft)		1106			1194			374			266	

Lane Group	EBL	EBT	EBR	WBL	WBT	WBR	NBL	NBT	NBR	SBL	SBT	SBR
Turn Bay Length (ft)	210		235	235		235	140		140			
Base Capacity (vph)	203	2980	1154	524	3691	1207	257	184	456	337	198	322
Starvation Cap Reductn	0	0	0	0	0	0	0	0	0	0	0	0
Spillback Cap Reductn	0	0	0	0	0	0	0	0	0	0	0	0
Storage Cap Reductn	0	0	0	0	0	0	0	0	0	0	0	0
Reduced v/c Ratio	0.14	0.40	0.09	0.77	0.68	0.03	0.50	0.04	0.45	0.24	0.18	0.22

Intersection Summary

Area Type: Other
Cycle Length: 150
Actuated Cycle Length: 135.9
Natural Cycle: 65
Control Type: Actuated-Uncoordinated
Maximum v/c Ratio: 0.88
Intersection Signal Delay: 20.9 Intersection LOS: C
Intersection Capacity Utilization 74.5% ICU Level of Service D
Analysis Period (min) 15
95th percentile volume exceeds capacity, queue may be longer.
Queue shown is maximum after two cycles.

Splits and Phases: 3: Northgate Parkway & Lake Cook Road

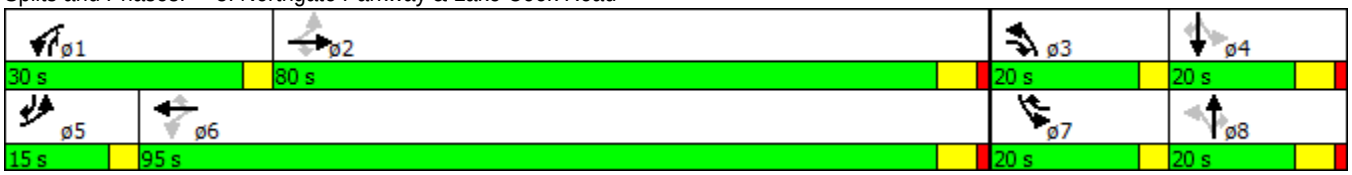

HCM Unsignalized Intersection Capacity Analysis
2: Northgate Parkway & Durable Packaging Access Drive

10/3/2016

Movement	EBL	EBR	NBL	NBT	SBT	SBR
Lane Configurations						
Volume (veh/h)	15	13	3	314	523	3
Sign Control	Stop			Free	Free	
Grade	0%			0%	0%	
Peak Hour Factor	0.93	0.93	0.93	0.93	0.93	0.93
Hourly flow rate (vph)	16	14	3	338	562	3
Pedestrians						
Lane Width (ft)						
Walking Speed (ft/s)						
Percent Blockage						
Right turn flare (veh)						
Median type				None	None	
Median storage veh)						
Upstream signal (ft)					454	
pX, platoon unblocked	0.90	0.90	0.90			
vC, conflicting volume	906	562	566			
vC1, stage 1 conf vol						
vC2, stage 2 conf vol						
vCu, unblocked vol	839	455	459			
tC, single (s)	6.5	6.2	4.4			
tC, 2 stage (s)						
tF (s)	3.6	3.3	2.5			
p0 queue free %	94	97	100			
cM capacity (veh/h)	288	547	859			

Direction, Lane #	EB 1	NB 1	SB 1	SB 2
Volume Total	30	341	562	3
Volume Left	16	3	0	0
Volume Right	14	0	0	3
cSH	369	859	1700	1700
Volume to Capacity	0.08	0.00	0.33	0.00
Queue Length 95th (ft)	7	0	0	0
Control Delay (s)	15.6	0.1	0.0	0.0
Lane LOS	C	A		
Approach Delay (s)	15.6	0.1	0.0	
Approach LOS	C			

Intersection Summary			
Average Delay	0.5		
Intersection Capacity Utilization	37.5%	ICU Level of Service	A
Analysis Period (min)	15		

Movement	EBL	EBT	EBR	WBL	WBT	WBR	NBL	NBT	NBR	SBL	SBT	SBR
Lane Configurations												
Volume (veh/h)	17	0	3	5	0	5	1	281	5	5	527	6
Sign Control		Stop			Stop			Free			Free	
Grade		0%			0%			0%			0%	
Peak Hour Factor	0.95	0.95	0.95	0.95	0.95	0.95	0.95	0.95	0.95	0.95	0.95	0.95
Hourly flow rate (vph)	18	0	3	5	0	5	1	296	5	5	555	6
Pedestrians												
Lane Width (ft)												
Walking Speed (ft/s)												
Percent Blockage												
Right turn flare (veh)												
Median type								None			None	
Median storage veh)												
Upstream signal (ft)											1073	
pX, platoon unblocked	0.91	0.91	0.91	0.91	0.91		0.91					
vC, conflicting volume	874	872	558	872	872	298	561			301		
vC1, stage 1 conf vol												
vC2, stage 2 conf vol												
vCu, unblocked vol	815	812	469	813	813	298	473			301		
tC, single (s)	7.6	6.5	6.5	8.1	7.5	7.2	5.1			5.1		
tC, 2 stage (s)												
tF (s)	3.9	4.0	3.6	4.4	4.9	4.2	3.1			3.1		
p0 queue free %	92	100	99	97	100	99	100			99		
cM capacity (veh/h)	224	284	489	187	203	559	661			861		

Direction, Lane #	EB 1	WB 1	NB 1	SB 1
Volume Total	21	11	302	566
Volume Left	18	5	1	5
Volume Right	3	5	5	6
cSH	244	280	661	861
Volume to Capacity	0.09	0.04	0.00	0.01
Queue Length 95th (ft)	7	3	0	0
Control Delay (s)	21.1	18.3	0.1	0.2
Lane LOS	C	C	A	A
Approach Delay (s)	21.1	18.3	0.1	0.2
Approach LOS	C	C		

Intersection Summary			
Average Delay	0.8		
Intersection Capacity Utilization	41.7%	ICU Level of Service	A
Analysis Period (min)	15		

Movement	EBL	EBR	NBL	NBT	SBT	SBR
Lane Configurations						
Volume (veh/h)	20	3	1	297	530	6
Sign Control	Stop			Free	Free	
Grade	0%			0%	0%	
Peak Hour Factor	0.95	0.95	0.95	0.95	0.95	0.95
Hourly flow rate (vph)	21	3	1	313	558	6
Pedestrians						
Lane Width (ft)						
Walking Speed (ft/s)						
Percent Blockage						
Right turn flare (veh)						
Median type				None	None	
Median storage veh)						
Upstream signal (ft)					583	
pX, platoon unblocked	0.90	0.90	0.90			
vC, conflicting volume	876	561	564			
vC1, stage 1 conf vol						
vC2, stage 2 conf vol						
vCu, unblocked vol	807	458	461			
tC, single (s)	6.4	6.2	4.1			
tC, 2 stage (s)						
tF (s)	3.5	3.3	2.2			
p0 queue free %	93	99	100			
cM capacity (veh/h)	318	547	1000			

Direction, Lane #	EB 1	NB 1	SB 1
Volume Total	24	314	564
Volume Left	21	1	0
Volume Right	3	0	6
cSH	336	1000	1700
Volume to Capacity	0.07	0.00	0.33
Queue Length 95th (ft)	6	0	0
Control Delay (s)	16.5	0.0	0.0
Lane LOS	C	A	
Approach Delay (s)	16.5	0.0	0.0
Approach LOS	C		

Intersection Summary			
Average Delay	0.5		
Intersection Capacity Utilization	38.3%	ICU Level of Service	A
Analysis Period (min)	15		

REQUEST FOR PLAN COMMISSION ACTION
STAFF PROJECT REVIEW

TO: Chairperson Ruffatto and Members of the Wheeling Plan Commission

FROM: Andrew C. Jennings, Director of Community Development
Brooke A. Jones, Senior Planner

RE: **Docket Nos. PC 16-15 and SCBA 16-27**
Café Zupas
1590 Lake Cook Road
(PC 16-15) Minor Site Plan & Appearance Approval of Landscaping and Façade Modications
(SCBA 16-27) Appearance Approval of Wall & Freestanding Signs

DATE OF REPORT: October 31, 2016

DATE OF MEETING: November 3, 2016

PROJECT OVERVIEW: The petitioner is seeking minor site plan and appearance approval for changes to the landscaping and front facade, appearance approval of new wall signs and appearance approval of modifications to an existing monument sign.

LOCATION MAP:

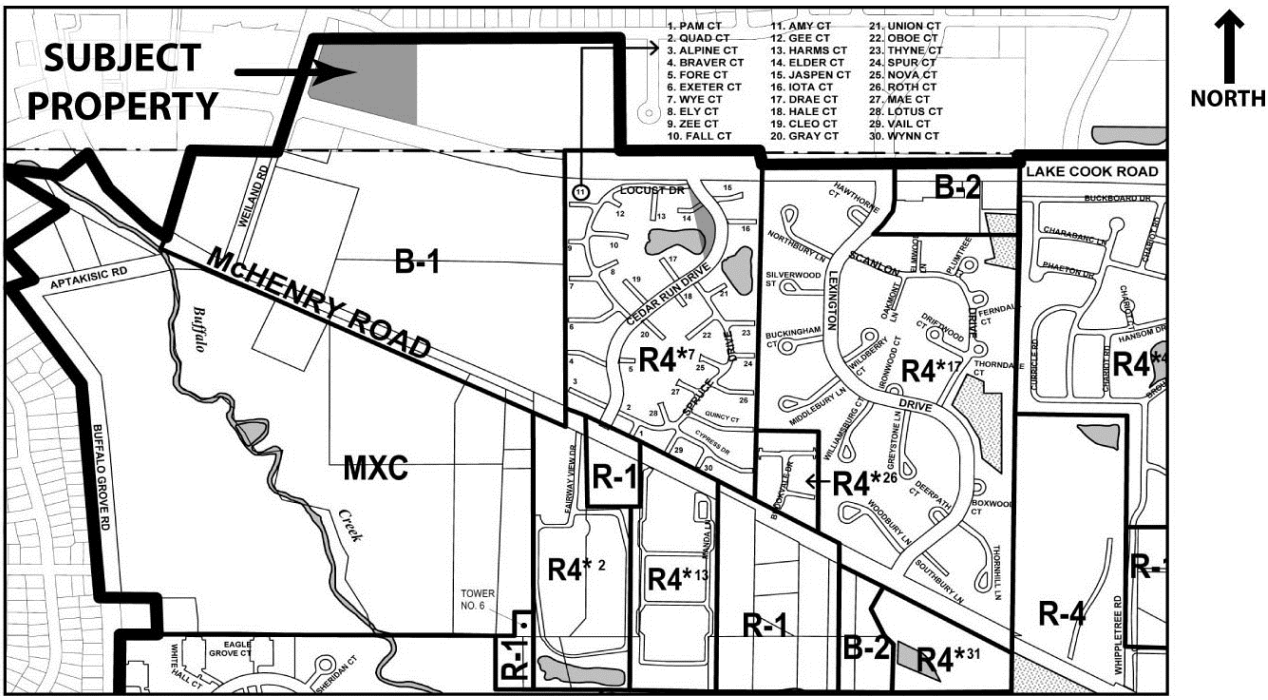

GENERAL PROPERTY INFORMATION

Applicant Name: Edgar Cepuritis, Café Zupas

Property Owner: Elizabeth Schwind

Common Property Address: 1590 Lake Cook Road (Schwind Plaza)

Common Location: Located at northeast corner of Lake Cook Road and Weiland Road

Neighboring Property Land Use(s):
North: Single- Family Residential (Buffalo Grove)
West: Commercial (Buffalo Grove)
South: Commercial
East: Commercial

Comprehensive Plan Designation: Commercial

Property Size: 5.39 acres for entire site; 4,130 sq. ft. for the outlot building (subject unit).

Existing Use of Property: Sit-down restaurant

Existing Property Zoning: B-1, Planned Shopping District

Previous Zoning Action on Property:

2005-30 A	Special use and site plan approval for bank with drive-through facilities. Approved November 28, 2005 (Ordinance 4026).
2005-30 B	Special use and site plan approval for a sit-down restaurant, TGI Friday's. Approved January 10, 2006 (Ordinance 4046).
2005-30 C	Variations to Title 19, Zoning, relating to parking setback, required parking and number of buildings on a lot. Approved November 28, 2005 (Ordinance 4024) and January 20, 2006 (Ordinance 4045).
2005-30 D	Variations to Title 21, Sign Code, to allow freestanding signs to be located closer to each other than the required 300'. Approved November 28, 2005 (Ordinance 4025).
2006-32A	Special use and site plan approval for a sit-down restaurant with outdoor seating. Approved November 13, 2006 (Ordinance 4140).
2006-32B	Variation from Title 19, Zoning, relating to number of required parking spaces. Approved November 13, 2006 (Ordinance 4139).
2007-4A	Variation from Title 19, Zoning, relating to number of required parking spaces. Approved February 26, 2007 (Ordinance 4177).
2007-4B	Special use and site plan approval for a carry-out restaurant. Approved February 26, 2007 (Ordinance 4178).
2016-13A	Variation from Title 19, Zoning, relating to number of required parking spaces. Approved August 1, 2016 (Ordinance 5022).
2016-13B	Special use and site plan approval for a sit-down restaurant with outdoor seating. Approved August 1, 2016 (Ordinance 5023).

DESCRIPTION OF PROPOSAL

Café Zupas, which is a fast casual restaurant new to the Chicagoland market, is opening in the vacant former Fifth Third bank building in Schwind Plaza. The restaurant received special use approval from the Village Board on August 1, 2016. The special use ordinance included the following condition of approval, per the suggestion of the Plan Commission:

- Within 90 days of special use approval, the petitioner shall return to the Plan Commission for minor site plan and appearance approval of a landscape plan.

The petitioner is also seeking appearance approval for new wall signs and for modifications to the existing monument sign.

The petitioner is also seeking appearance approval for a minor change to the building façade.

LANDSCAPE PLAN REVIEW

Landscaping Plan: The proposed landscape plan identifies the existing plants on site and identifies minor landscape alterations to accommodate the proposed construction for the restaurant. Some plants will be removed and some will be replaced. A large portion of landscaping at the southeast corner of the building will be removed to accommodate the new patio. The existing plants will also be weeded and trimmed, as needed. The foundation plantings for this site include a mix of evergreen shrubs (inkberry), flowering shrubs (lilac bush and knockout roses), ground cover (gro low sumac and rug juniper) and decorative grasses (pennisetum and calamagrostis).

ELEVATION PLAN REVIEW

Elevation Plans: The petitioner is requesting appearance approval to modify the approved materials of the two columns surrounding the front entry doors of the south façade. The primary material of the columns is changing from EIFS to spandrel glass. At the base of the column a more durable material is used. The proposed base column material is changing from Hardie board to a stainless material. The revised building elevations have been provided by the petitioner. Staff also provided the approved elevation plans (dated May 17, 2016) for comparison.

SIGN REVIEW

Sign Locations: The petitioner is proposing to replace the existing monument sign at the southwest corner of the site. The petitioner also requests permission to install three new wall signs. Signs are proposed for the south (primary), west and east facades.

Sign Type and Size: The petitioner is proposing three wall signs. The primary sign is located on the south façade, above the entrance. It includes a red backer plate with white internally

illuminated channel letters for "Zupas" and black boxes with white lettering for "Café" and the business tagline. The total area of this sign is 60 sq. ft. A smaller, yet otherwise identical sign, is proposed for the west façade. This sign is 27 sq. ft. in size. For the east façade, white channel letters on a black backer panel is proposed. The sign includes the business tagline only. The sign area is 28 sq. ft.

The petitioner is also planning to reface the existing double-sided monument-style sign. The sign face will have a red background with the trademark white and black business name. The faces are 79.3 sq. ft. each. The business address is located on the sign base.

The proposed signs meet the size requirements of the Sign Code.

Landscaping: At the time the staff report was written, a landscape plan had not yet been provided. If the plan is submitted late, it will be forwarded to the Commission. A condition of approval has been added to the motion that a landscape plan is required for approval of the monument sign.

STAFF REVIEW

Impact on Adjacent Uses: No impact is anticipated on adjacent uses.

Staff Recommended Action: After reviewing the proposal, Staff suggests the Plan Commission approve the proposed site and building changes and new signs.

PROPOSED MOTIONS

If the Plan Commission approves of the landscaping and signs, appropriate motions would be to:

Approve Docket No. PC 16-15, to grant minor site plan and appearance approval of the landscaping and façade modifications as shown on the landscape plan submitted September 14, 2016 and the building elevations (2 sheets) submitted October 31, 2016 for Café Zupas, located at 1590 Lake Cook Road, Wheeling Illinois.

Approve Docket No. SCBA 16-22 to grant appearance approval for the proposed freestanding and wall signs in accordance with the following exhibits submitted October 27, 2016 for Café Zupas, located at 1590 Lake Cook Road, Wheeling, Illinois:

- Elevation plans (3 sheets),
- Wall sign A plan,
- Wall sign B plan,
- Wall sign C plan,
- Monument sign plan, and
- Site plan.

And with the following conditions of approval:

1. That the m onument sign shall not be approved without a landscape plan that is reviewed by the Plan Commission.

Andrew C. Jennings, AICP
Director of Community Development

Brooke A. Jones
Senior Planner

Attachments:

Photos of existing conditions (staff)

Landscape plan

Sign elevation plans (3 sheets)

Wall sign A plan

Wall sign B plan

Wall sign C plan

Monument sign plan

Site plan

Proposed building elevation plans (2 sheets)

Approved building elevation plans (2 sheets)

Café Zupas – 1590 Lake Cook Road

Docket Nos. PC 16-15 & SCBA 16-27 (Minor Site Plan & Appearance Approval of Landscaping and Appearance Approval of Wall & Freestanding Signs)

Plan Commission Meeting – November 3, 2016

Existing conditions of front building and parking lot – looking north

Café Zupas – 1590 Lake Cook Road

Docket Nos. PC 16-15 & SCBA 16-27 (Minor Site Plan & Appearance Approval of Landscaping and Appearance Approval of Wall & Freestanding Signs)

Plan Commission Meeting – November 3, 2016

Existing conditions of east side of building

Café Zupas – 1590 Lake Cook Road

Docket Nos. PC 16-15 & SCBA 16-27 (Minor Site Plan & Appearance Approval of Landscaping and Appearance Approval of Wall & Freestanding Signs)

Plan Commission Meeting – November 3, 2016

Existing conditions of west side of building

Café Zupas – 1590 Lake Cook Road

Docket Nos. PC 16-15 & SCBA 16-27 (Minor Site Plan & Appearance Approval of Landscaping and Appearance Approval of Wall & Freestanding Signs)

Plan Commission Meeting – November 3, 2016

Existing conditions of freestanding sign (looking west)

SITE PLAN KEY NOTES

1. EXISTING CONCRETE CURB TO REMAIN
2. EXISTING LOCATION OF GAS METER; COORDINATE WITH SHEET A101
3. NOT USED
4. PATIO RAILING; COORDINATE WITH SHEET A101
5. EXISTING ELECTRICAL EQUIPMENT TO REMAIN; VERIFY LOCATION IN FIELD; COORDINATE WITH ELECTRICAL
6. RETAIN & PROTECT EXISTING CONCRETE
7. EXISTING ACCESSIBLE RAMP TO REMAIN
8. RETAIN AND PROTECT EXISTING LANDSCAPING INCLUDING PLANTINGS, PLANTER BED AND IRRIGATION SYSTEM; LOCATIONS & SIZES SHOWN ARE APPROXIMATE AND SCHEMATIC; CONTRACTOR TO VERIFY EXISTING CONDITIONS IN FIELD PRIOR TO WORK
9. EXISTING TRASH ENCLOSURE TO REMAIN; COORDINATE WITH SHEET A101
10. BIKE RACK; COORDINATE WITH SHEET A101
11. AREA OF NEW CONCRETE; COORDINATE WITH SHEET A101
    CONTRACTOR SHALL REMOVE EXISTING PLANTINGS & MODIFY EXISTING SPRINKLER SYSTEM AS REQUIRED INCLUDING (BUT NOT LIMITED TO) PLANTINGS, IRRIGATION LINES, AND IRRIGATION SYSTEM.
12. ADA PARKING SIGNAGE; COORDINATE WITH SHEET A101
13. LOCATION OF EXISTING BIKE RACK TO BE REMOVED; COORDINATE WITH SHEET D101
14. APPROXIMATE LOCATION OF EXISTING CONCRETE & ASPHALT TO BE REMOVED; D101 COORDINATE WITH SHEET
15. REMOVE EXISTING LANDSCAPE BED AND PLANTINGS IN AREA INDICATED BY DIAGONAL HATCH; MODIFY EXISTING IRRIGATION SYSTEM AS REQUIRED; COORD. WITH SITE PLAN & OWNER
16. REMOVE EXISTING LIGHT WITHIN LANDSCAPE; VERIFY EXISTING LOCATION IN FIELD

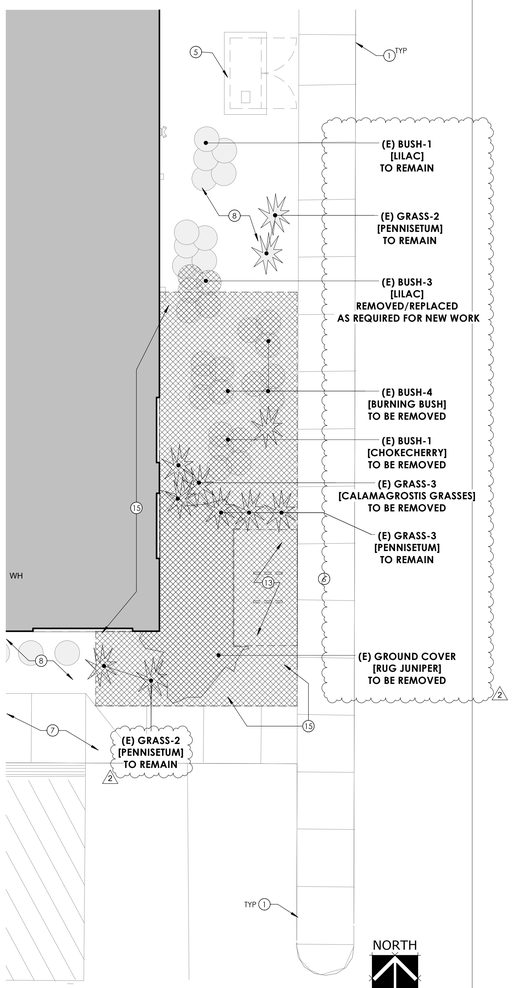

2 SCHEMATIC LANDSCAPE DEMOLITION PLAN
3/16" = 1'-0"

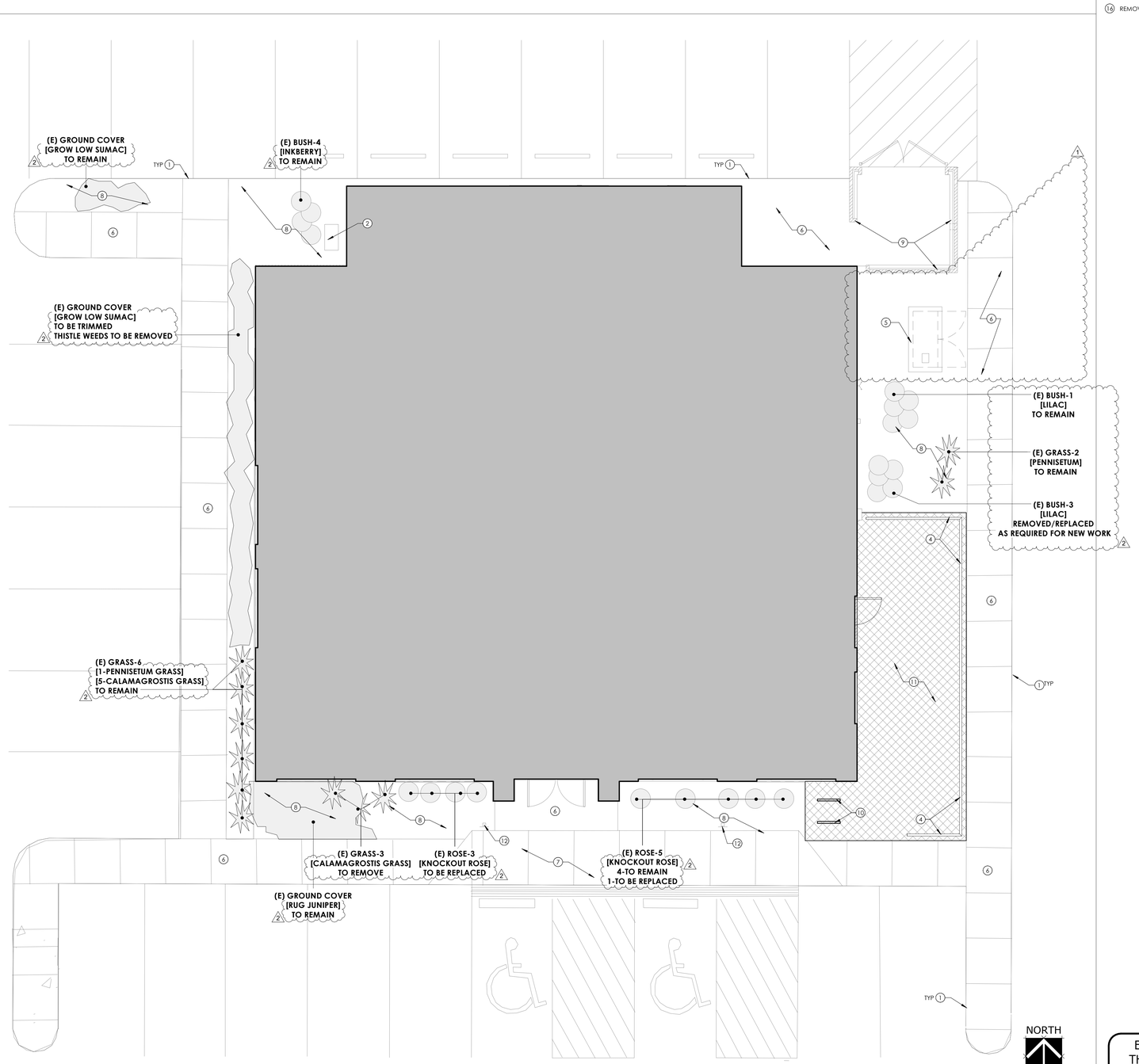

1 PROPOSED SCHEMATIC LANDSCAPE PLAN
3/16" = 1'-0"

Exhibit received September 14, 2016

EXISTING LANDSCAPE AREAS OUTSIDE OF THE SITE AREA SHOWN IN THIS SCHEMATIC LANDSCAPE PLAN ARE TO REMAIN AS IS

revisions: num.	description	date
1	ADD-SI OWNER REVISIONS	08-29-2016
2	CITY COMMENTS	09-30-2016

date: 08-15-2016
project number: CZ-43WHE
project status: PERMIT SET
original drawing is 30" x 42"
current scale: 1/8"=1'-0" 9/12/2016 2:18:31 PM

The drawings, specifications, designs, plans and photographs contained herein are the property of Babcock Design Group, Inc. Their use, reproduction or publication in whole or in part without the express written consent of Babcock Design Group, Inc. is prohibited. Any such use, reproduction or publication without the express written consent of Babcock Design Group, Inc. shall be a violation of the copyright laws of the United States of America and other countries and shall entitle Babcock Design Group, Inc. to all remedies provided by such laws and other applicable laws, treaties and conventions.
COPYRIGHT © 2013 BABCOCK DESIGN GROUP

stamp: LICENSED ARCHITECT JOSEPH NORMAN WINGER 001.02326 STATE OF ILLINOIS

CAFE ZUPAS - WHEELING, IL
for:
STORE NO. 43
1590 E. COOK ROAD
WHEELING, IL 60090

babcock design group
52 exchange place salt lake city, ut 84111 t 801.531.1124
817 west idaho street boise, id 83702 t 208.424.7675 www.babcockdesign.com

sheet title: SCHEMATIC LANDSCAPE PLAN
sheet number: A101A

SOUTH ELEVATION (PRIMARY)

SCALE: 3/16" = 1'-0"

Exhibit received October 27, 2016

Utah Contractors: 375809-5501 • Nevada:60486 • Colorado:237787 • Idaho:RCE-29969

THIS IS AN ORIGINAL UNPUBLISHED DRAWING CREATED BY ALLIED ELECTRIC SIGN. IT IS SUBMITTED FOR YOUR PERSONAL USE IN CONNECTION WITH THE PROJECT BEING PLANNED FOR YOU. IT IS NOT TO BE REPRODUCED, COPIED OR EXHIBITED.

ALLIED ELECTRIC SIGN & Awning

Signs that build business!

SALT LAKE CITY: 1920 S. 900 W. (801) 972-5503 WWW.ALLIED-SIGN.COM

UTAH COUNTY: 1852 N. Parkway Court, Springville, UT 84663 • (801) 489-3645 **OGDEN:** 2924 Pennsylvania Avenue • (801) 621-4612

DRAWING STEPS
- ☐ CONCEPT
- ☐ ESTIMATING
- ☐ PERMIT/LANDLORD
- ☐ PRODUCTION/INSTALL

DRAWING REVIEW NAME
SURVEY NAME
PRODUCTION REVIEW NAME
INSTALL REVIEW NAME

Client: Napa
Address: 1590 E. Lake Cook Rd.
Wheeling, IL 60090
File Name: Zupas (Wheeling, IL) - Sign Package - 10-27-16 (REV 1)

SALES APPROVAL:
Designer: Nik
Sales: Monica

	NAME	DATE	INITIAL
CUSTOMER APPROVAL			
LANDLORD APPROVAL			

WEST ELEVATION

SCALE: 3/16" = 1'-0"

Exhibit received October 27, 2016

Utah Contractors: 375809-5501 • Nevada:60486 • Colorado:237787 • Idaho:RCE-29969

THIS IS AN ORIGINAL UNPUBLISHED DRAWING CREATED BY ALLIED ELECTRIC SIGN. IT IS SUBMITTED FOR YOUR PERSONAL USE IN CONNECTION WITH THE PROJECT BEING PLANNED FOR YOU. IT IS NOT TO BE REPRODUCED, COPIED OR EXHIBITED.

ALLIED ELECTRIC SIGN & Awning

Signs that build business!

SALT LAKE CITY: 1920 S. 900 W. (801) 972-5503 WWW.ALLIED-SIGN.COM

DRAWING STEPS
- ☐ CONCEPT
- ☐ ESTIMATING
- ☐ PERMIT/LANDLORD
- ☐ PRODUCTION/INSTALL

DRAWING REVIEW NAME
SURVEY NAME
PRODUCTION REVIEW NAME
INSTALL REVIEW NAME

Client: Napa
Address: 1590 E. Lake Cook Rd.
Wheeling, IL 60090
File Name: Zupas (Wheeling, IL) - Sign Package - 10-27-16 (REV 1)

SALES APPROVAL:
Designer: Nik
Sales: Monica

CUSTOMER APPROVAL NAME DATE INITIAL
LANDLORD APPROVAL NAME DATE INITIAL

UTAH COUNTY: 1852 N. Parkway Court, Springville, UT 84663 • (801) 489-3645 **OGDEN:** 2924 Pennsylvania Avenue • (801) 621-4612

ELEVATION

SCALE: 3/16" = 1'-0"

Exhibit received October 27, 2016

Utah Contractors: 375809-5501 • Nevada:60486 • Colorado:237787 • Idaho:RCE-29969

THIS IS AN ORIGINAL UNPUBLISHED DRAWING CREATED BY ALLIED ELECTRIC SIGN. IT IS SUBMITTED FOR YOUR PERSONAL USE IN CONNECTION WITH THE PROJECT BEING PLANNED FOR YOU. IT IS NOT TO BE REPRODUCED, COPIED OR EXHIBITED.

ALLIED ELECTRIC SIGN & Awning

Signs that build business!

SALT LAKE CITY: 1920 S. 900 W. (801) 972-5503 WWW.ALLIED-SIGN.COM

UTAH COUNTY: 1852 N. Parkway Court, Springville, UT 84663 • (801) 489-3645 **OGDEN:** 2924 Pennsylvania Avenue • (801) 621-4612

DRAWING STEPS
- ☐ CONCEPT
- ☐ ESTIMATING
- ☐ PERMIT/LANDLORD
- ☐ PRODUCTION/INSTALL

DRAWING REVIEW NAME
SURVEY NAME
PRODUCTION REVIEW NAME
INSTALL REVIEW NAME

Client: Napa
Address: 1590 E. Lake Cook Rd.
Wheeling, IL 60090
File Name: Zupas (Wheeling, IL) - Sign Package - 10-27-16 (REV 1)

SALES APPROVAL:
Designer: Nik
Sales: Monica

	NAME	DATE	INITIAL
CUSTOMER APPROVAL			
LANDLORD APPROVAL			

MAIN WALL DISPLAY SIGN A

18" LETTERS - RED BACKER

MANUFACTURE
(1) WALL SIGN

60 SQ FT

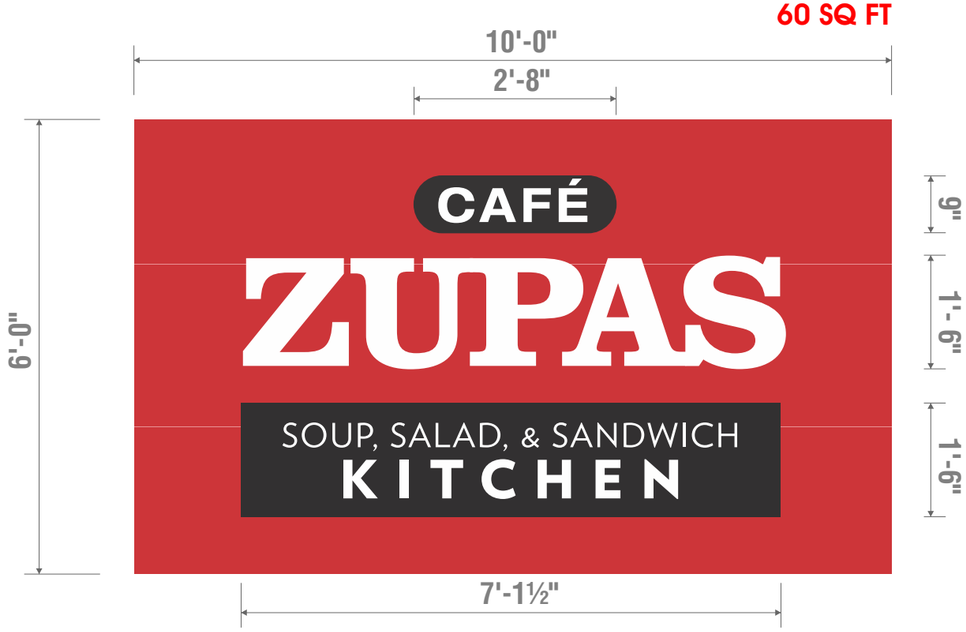

LAYOUT

SCALE: ½" = 1'-0"

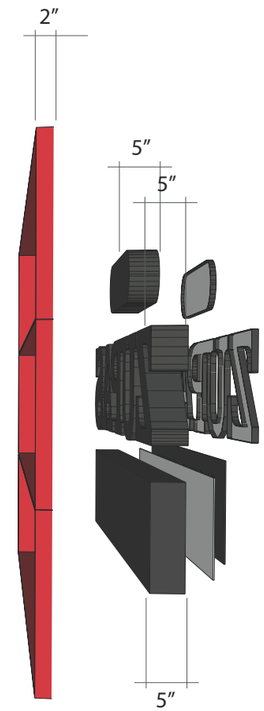

TYPICAL SECTION VIEW - NTS

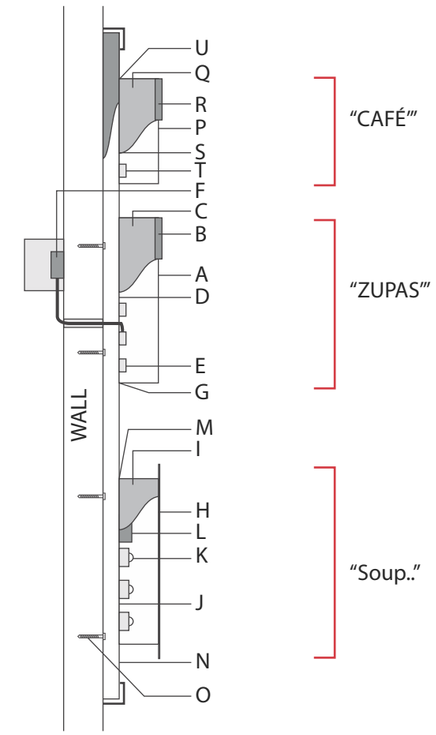

CHANNEL LETTERS- "ZUPAS"

A. FACE: 3/16" transparent white plex
B. TRIM: 1" black trimcap
C. RETURNS: .040 black aluminum 5" deep
D. BACKS: .063 aluminum stock color
E. ILLUMINATION: White LEDs
F. POWER SUPPLY: Remote housed in power supply box
G. MOUNTED to BACKER

WALL SIGN-"Soup, Salad, & Sandwich Kitchen"

H. FACES: .090 Aluminum painted black (Larger than cabinet routed and backed with 3/16" transparent white plex
I. RETURNS: .063 aluminum 5" dep painted black
J. BACKS: .063 aluminum stock color
K. ILLUMINATION: White LED's
L. BALLAST: Housd in cabinet
M. MOUNTED to BACKER

CHANNEL CABINET-"CAFE"

P. FACE: 3/16" transparent white plex with black 3M vinyl
Q. TRIM: 1" black trimcap
R. RETURNS: .040 black aluminum 5" deep
S. BACKS: .063 aluminum stock color
T. ILLUMINATION: White LEDs
F. POWER SUPPLY: Remote housed in power supply box
U. MOUNTED to BACKER

CUSTOM BACKER

N. BRAKEFORM ALUMINUM PAINTED RED (or approved red by owner) WITH ALUMINUM FRAMING
O. FLUSH MOUNTED to WALL

DISCONNECT SWITCH AT SIGN
120V SERVICE SUPPLIED BY OTHERS
INTERNAL STRUCTURE 2"X2"X1/8" ALUMINUM ANGLE PRIMED AND PAINTED

Exhibit received October 27, 2016

Utah Contractors: 375809-5501 • Nevada:60486 • Colorado:237787 • Idaho:RCE-29969

THIS IS AN ORIGINAL UNPUBLISHED DRAWING CREATED BY ALLIED ELECTRIC SIGN. IT IS SUBMITTED FOR YOUR PERSONAL USE IN CONNECTION WITH THE PROJECT BEING PLANNED FOR YOU. IT IS NOT TO BE REPRODUCED, COPIED OR EXHIBITED.

ALLIED ELECTRIC SIGN & Awning
Signs that build business!

SALT LAKE CITY:
1920 S. 900 W.
(801) 972-5503
WWW.ALLIED-SIGN.COM

DRAWING STEPS
- CONCEPT
- ESTIMATING
- PERMIT/LANDLORD
- PRODUCTION/INSTALL

DRAWING REVIEW NAME
SURVEY NAME
PRODUCTION REVIEW NAME
INSTALL REVIEW NAME

Client: Napa
Address: 1590 E. Lake Cook Rd.
Wheeling, IL 60090
File Name: Zupas (Wheeling, IL) - Sign Package - 10-27-16 (REV 1)

SALES APPROVAL:
Designer: Nik
Sales: Monica

CUSTOMER APPROVAL NAME DATE INITIAL
LANDLORD APPROVAL NAME DATE INITIAL

UTAH COUNTY: 1852 N. Parkway Court, Springville, UT 84663 • (801) 489-3645 **OGDEN:** 2924 Pennsylvania Avenue • (801) 621-4612

MAIN WALL DISPLAY SIGN B

14" LETTERS - RED BACKER

MANUFACTURE
(1) WALL SIGN

27.08 SQ FT

LAYOUT
SCALE: ½" = 1'-0"

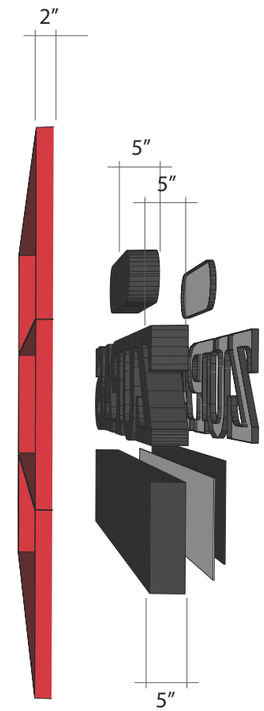

TYPICAL SECTION VIEW - NTS

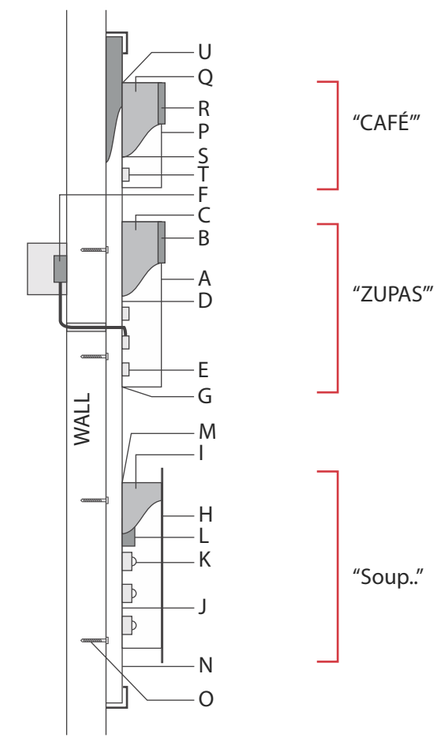

CHANNEL LETTERS- "ZUPAS"

A. FACE: 3/16" transparent white plex
B. TRIM: 1" black trimcap
C. RETURNS: .040 black aluminum 5" deep
D. BACKS: .063 aluminum stock color
E. ILLUMINATION: White LEDs
F. POWER SUPPLY: Remote housed in power supply box
G. MOUNTED to BACKER

WALL SIGN-"Soup, Salad, & Sandwich Kitchen"

H. FACES: .090 Aluminum painted black (Larger than cabinet routed and backed with 3/16" transparent white plex
I. RETURNS: .063 aluminum 5" dep painted black
J. BACKS: .063 aluminum stock color
K. ILLUMINATION: White LED's
L. BALLAST: Housd in cabinet
M. MOUNTED to BACKER

CHANNEL CABINET-"CAFE"
P. FACE: 3/16" transparent white plex with black 3M vinyl
Q. TRIM: 1" black trimcap
R. RETURNS: .040 black aluminum 5" deep
S. BACKS: .063 aluminum stock color
T. ILLUMINATION: White LEDs
F. POWER SUPPLY: Remote housed in power supply box
U. MOUNTED to BACKER

CUSTOM BACKER
N. BRAKEFORM ALUMINUM PAINTED RED (or approved red by owner) WITH ALUMINUM FRAMING
O. FLUSH MOUNTED to WALL

DISCONNECT SWITCH AT SIGN
120V SERVICE SUPPLIED BY OTHERS
INTERNAL STRUCTURE 2"X2"X1/8" ALUMINUM ANGLE PRIMED AND PAINTED

Exhibit received October 27, 2016

Utah Contractors: 375809-5501 • Nevada:60486 • Colorado:237787 • Idaho:RCE-29969

THIS IS AN ORIGINAL UNPUBLISHED DRAWING CREATED BY ALLIED ELECTRIC SIGN. IT IS SUBMITTED FOR YOUR PERSONAL USE IN CONNECTION WITH THE PROJECT BEING PLANNED FOR YOU. IT IS NOT TO BE REPRODUCED, COPIED OR EXHIBITED.

ALLIED ELECTRIC SIGN & Awning
Signs that build business!

SALT LAKE CITY: 1920 S. 900 W. (801) 972-5503 WWW.ALLIED-SIGN.COM

DRAWING STEPS
☐ CONCEPT
☐ ESTIMATING
☐ PERMIT/LANDLORD
☐ PRODUCTION/INSTALL

DRAWING REVIEW NAME
SURVEY NAME
PRODUCTION REVIEW NAME
INSTALL REVIEW NAME

Client: Napa
Address: 1590 E. Lake Cook Rd.
Wheeling, IL 60090
File Name: Zupas (Wheeling, IL) - Sign Package - 10-27-16 (REV 1)

SALES APPROVAL:
Designer: Nik
Sales: Monica

CUSTOMER APPROVAL NAME DATE INITIAL
LANDLORD APPROVAL NAME DATE INITIAL

UTAH COUNTY: 1852 N. Parkway Court, Springville, UT 84663 • (801) 489-3645 OGDEN: 2924 Pennsylvania Avenue • (801) 621-4612

CHANNEL LETTERS ON BACKER PANEL

SIGN C

MANUFACTURE
(1) WALL SIGNS

- **A** FACES: 3/16" TRANS WHITE SG PLEX
- **B** TRIM: 1" WHITE TRIMCAP
- **C** RETURNS: .040 WHITE ALUMINUM 5" DEEP
- **D** BACKS: .063 ALUMINUM STOCK COLOR
- **E** ILLUMINATION: WHITE LEDs
- **F** POWER SUPPLY: REMOTE HOUSED IN POWER SUPPLY BOX
- **G** MOUNTED TO FASCIA (SEE ATTACHMENT DETAIL)
- **H** BACKER PANEL: ALL ALUMINUM CONSTRUCTION
  PAINTED BLACK
  1" DEEP

120V SERVICE SUPPLIED BY OTHERS

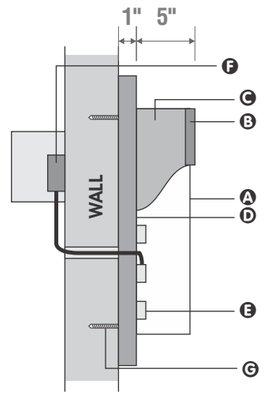

TYPICAL SECTION VIEW
NTS

28 SQ FT

LAYOUT
SCALE: ¾" = 1'-0"

Exhibit received October 27, 2016

Utah Contractors: 375809-5501 • Nevada:60486 • Colorado:237787 • Idaho:RCE-29969

THIS IS AN ORIGINAL UNPUBLISHED DRAWING CREATED BY ALLIED ELECTRIC SIGN. IT IS SUBMITTED FOR YOUR PERSONAL USE IN CONNECTION WITH THE PROJECT BEING PLANNED FOR YOU. IT IS NOT TO BE REPRODUCED, COPIED OR EXHIBITED.

ALLIED ELECTRIC SIGN & Awning
Signs that build business!

SALT LAKE CITY:
1920 S. 900 W.
(801) 972-5503
WWW.ALLIED-SIGN.COM

DRAWING STEPS
- ☐ CONCEPT
- ☐ ESTIMATING
- ☐ PERMIT/LANDLORD
- ☐ PRODUCTION/INSTALL

DRAWING REVIEW	NAME
SURVEY	NAME
PRODUCTION REVIEW	NAME
INSTALL REVIEW	NAME

Client: Napa
Address: 1590 E. Lake Cook Rd.
Wheeling, IL 60090
File Name: Zupas (Wheeling, IL) - Sign Package - 10-27-16 (REV 1)

SALES APPROVAL:
Designer: Nik
Sales: Monica

CUSTOMER APPROVAL	NAME	DATE	INITIAL
LANDLORD APPROVAL	NAME	DATE	INITIAL

UTAH COUNTY: 1852 N. Parkway Court, Springville, UT 84663 • (801) 489-3645 **OGDEN:** 2924 Pennsylvania Avenue • (801) 621-4612

D/F MONUMENT REFACE

MANUFACTURE
(2) PLEX FACE WITH VINYL APPLIED

- FACES: 3/16" TRANS WHITE SG PLEX VINYL APPLIED

VINYL SCHEDULE
SCREEN AND PRINT COLORS MAY VARY

- V1: 3M TRANS RED 230-33
- V2: 3M TRANS BLACK 230-22

Verify in field

Exhibit received October 27, 2016

Utah Contractors: 375809-5501 • Nevada:60486 • Colorado:237787 • Idaho:RCE-29969

THIS IS AN ORIGINAL UNPUBLISHED DRAWING CREATED BY ALLIED ELECTRIC SIGN. IT IS SUBMITTED FOR YOUR PERSONAL USE IN CONNECTION WITH THE PROJECT BEING PLANNED FOR YOU. IT IS NOT TO BE REPRODUCED, COPIED OR EXHIBITED.

ALLIED ELECTRIC SIGN & Awning
Signs that build business!

SALT LAKE CITY: 1920 S. 900 W. (801) 972-5503 WWW.ALLIED-SIGN.COM

UTAH COUNTY: 1852 N. Parkway Court, Springville, UT 84663 • (801) 489-3645 **OGDEN:** 2924 Pennsylvania Avenue • (801) 621-4612

DRAWING STEPS
- ☐ CONCEPT
- ☐ ESTIMATING
- ☐ PERMIT/LANDLORD
- ☐ PRODUCTION/INSTALL

DRAWING REVIEW	NAME
SURVEY	NAME
PRODUCTION REVIEW	NAME
INSTALL REVIEW	NAME

Client: Napa
Address: 1590 E. Lake Cook Rd.
Wheeling, IL 60090
File Name: Zupas (Wheeling, IL) - Sign Package - 10-27-16 (REV 1)

SALES APPROVAL:
Designer: Nik
Sales: Monica

CUSTOMER APPROVAL	NAME	DATE	INITIAL
LANDLORD APPROVAL	NAME	DATE	INITIAL

CAFÉ ZUPAS

WHEELING, ILLINOIS

1590 E. Lake Cook Rd.
Wheeling, Illinois 60090
PARKING

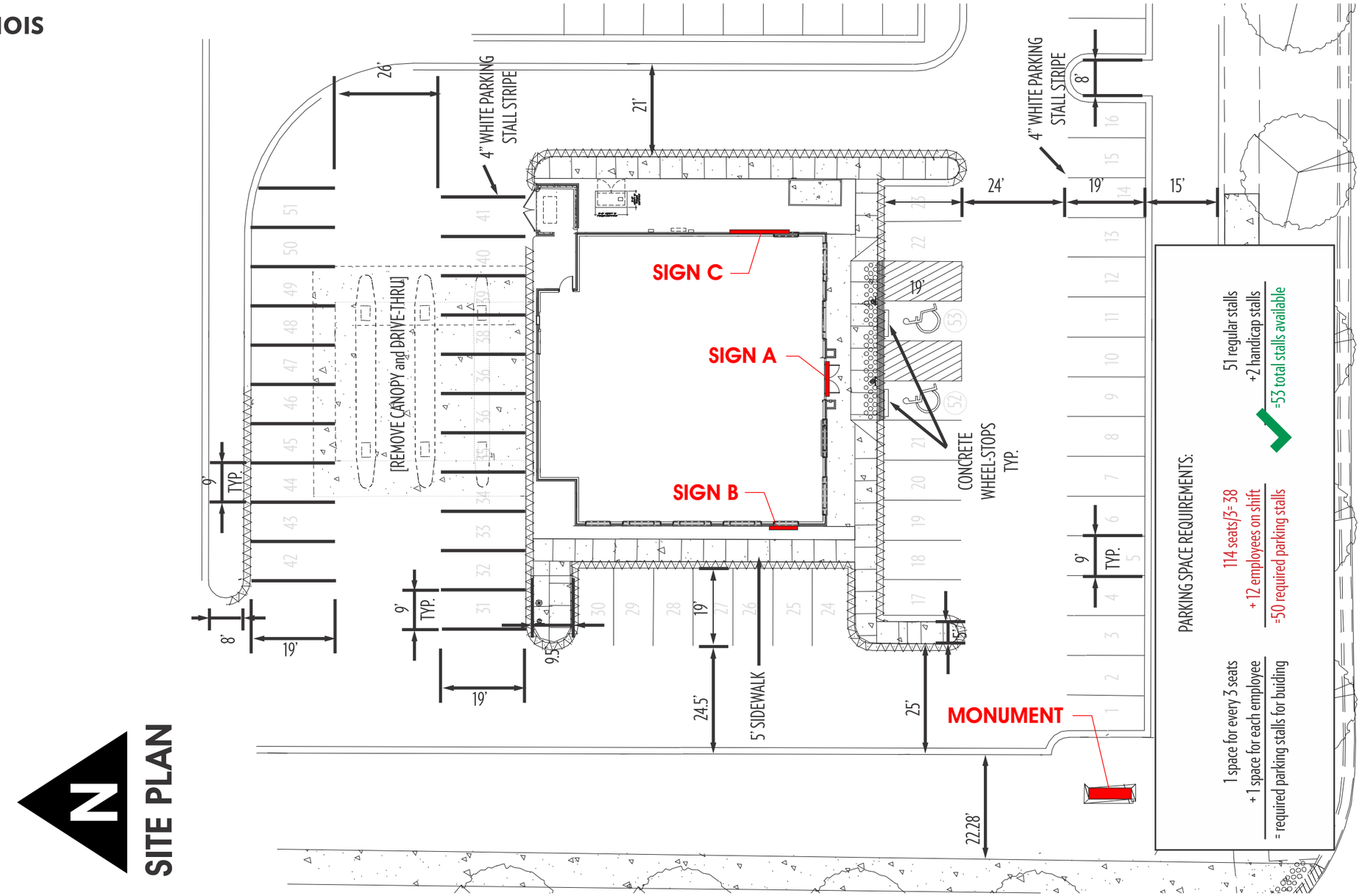

Exhibit received October 27, 2016

Utah Contractors: 375809-5501 • Nevada:60486 • Colorado:237787 • Idaho:RCE-29969

THIS IS AN ORIGINAL UNPUBLISHED DRAWING CREATED BY ALLIED ELECTRIC SIGN. IT IS SUBMITTED FOR YOUR PERSONAL USE IN CONNECTION WITH THE PROJECT BEING PLANNED FOR YOU. IT IS NOT TO BE REPRODUCED, COPIED OR EXHIBITED.

ALLIED ELECTRIC SIGN & Awning
Signs that build business!

SALT LAKE CITY:
1920 S. 900 W.
(801) 972-5503
WWW.ALLIED-SIGN.COM

DRAWING STEPS
- ☐ CONCEPT
- ☐ ESTIMATING
- ☐ PERMIT/LANDLORD
- ☐ PRODUCTION/INSTALL

DRAWING REVIEW	NAME
SURVEY	NAME
PRODUCTION REVIEW	NAME
INSTALL REVIEW	NAME

Client: Napa
Address: 1590 E. Lake Cook Rd.
Wheeling, IL 60090
File Name: Zupas (Wheeling, IL) - Sign Package - 10-27-16 (REV 1)

SALES APPROVAL:
Designer: Nik
Sales: Monica

CUSTOMER APPROVAL	NAME	DATE	INITIAL
LANDLORD APPROVAL	NAME	DATE	INITIAL

UTAH COUNTY: 1852 N. Parkway Court, Springville, UT 84663 • (801) 489-3645 **OGDEN:** 2924 Pennsylvania Avenue • (801) 621-4612

CAFÉ ZUPAS

WHEELING, ILLINOIS

1590 E. Lake Cook Rd.
Wheeling, Illinois 60090
PROPOSED EXTERIOR

EXISTING

Exhibit received October 31, 2016

10-27-16

CAFÉ ZUPAS

WHEELING, ILLINOIS

1590 E. Lake Cook Rd.
Wheeling, Illinois 60090
PROPOSED EXTERIOR

PAN-CHANNEL SIGN with red aluminum backer
see spec sheet

SANDREL GLASS: grey
SANDREL GLASS: grey

WINDOWS: Extend to the floor

CLEAR ANODIZED ALUMINUM FRIEZE

FIBER CEMENT BOARD: Cembonit Graphite

PAN-CHANNEL SIGN with red aluminum backer
see spec sheet

STUCCO: Sw xxxx "color" tbd

BLUE GLASS: In mullions

AWNINGS: red
see spec sheet

STUCCO: Sw xxxx "color" tbd

Blueglass entrance with stainless steel on bottom

Patio

WINDOWS: Extend to the floor

PAN-CHANNEL SIGN with black aluminum backer

AWNINGS: red
see spec sheet

Patio

NEW STOREFRONT: windows and door

Exhibit received October 31, 2016

CAFÉ ZUPAS

WHEELING, ILLINOIS

1590 E. Lake Cook Rd.
Wheeling, Illinois 60090
PROPOSED EXTERIOR

EXISTING

Exhibit received May 17, 2016

3-30-16

CAFÉ ZUPAS

WHEELING, ILLINOIS

1590 E. Lake Cook Rd.
Wheeling, Illinois 60090
PROPOSED EXTERIOR

PAN-CHANNEL SIGN with red aluminum backer

SANDREL GLASS: grey
SANDREL GLASS: grey

WINDOWS: Extend to the floor

CLEAR ANODIZED ALUMINUM FRIEZE

FIBER CEMENT BOARD: Cembonit Graphite

PAN-CHANNEL SIGN with red aluminum backer

STUCCO: Sw xxxx "color" tbd

BLUE GLASS: In mullions

AWNINGS: red

STUCCO: Sw xxxx "color" tbd

STUCCO: Sw xxxx "color" tbd

WINDOWS: Extend to the floor

Patio

PAN-CHANNEL SIGN with black aluminum backer

Patio

NEW STOREFRONT: windows and door

Exhibit received May 17, 2016

REQUEST FOR PLAN COMMISSION ACTION
STAFF PROJECT REVIEW

TO: Chairperson Ruffatto and Members of the Wheeling Plan Commission

FROM: Andrew C. Jennings, Director of Community Development
Brooke A. Jones, Senior Planner

RE: Docket No. PC 16-16
Harmony Village
(See attached list of addresses)
Minor Site Plan & Appearance Approval of Façade Modifications

DATE OF REPORT: October 28, 2016

DATE OF MEETING: November 3, 2016

PROJECT OVERVIEW: The petitioner is requesting m inor site plan and appearan ce approval for façade modifications at Harmony Village.

LOCATION MAP:

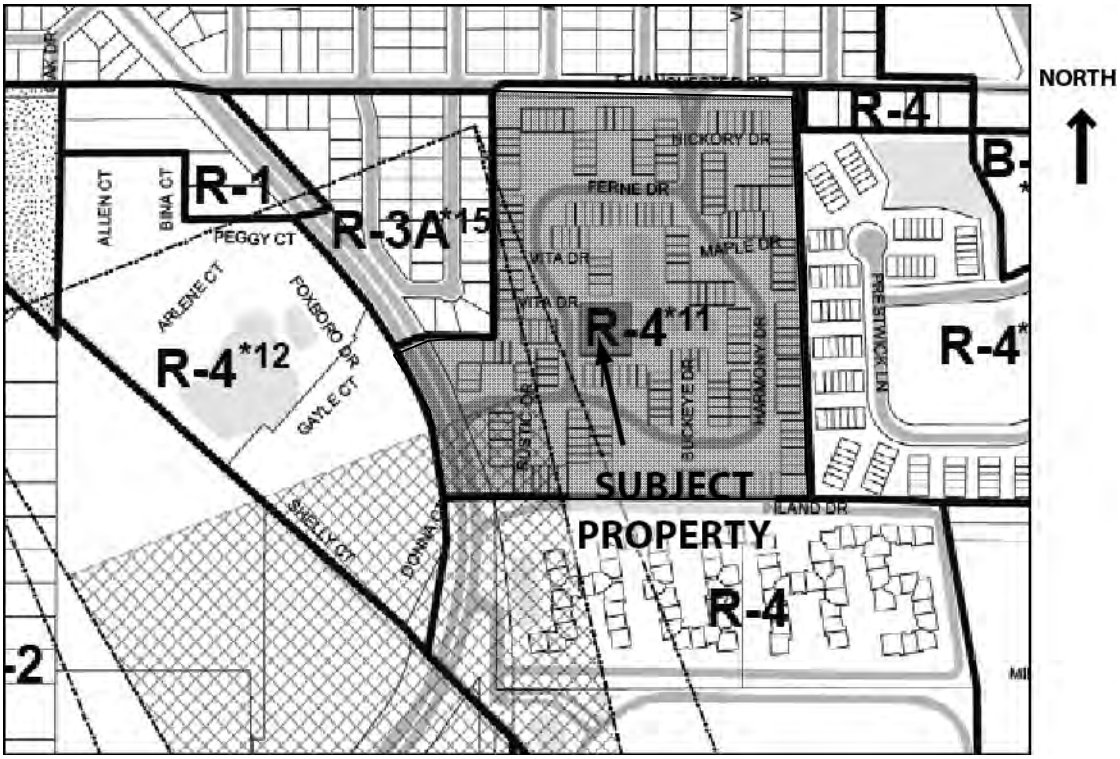

GENERAL PROPERTY INFORMATION

Applicant Name: John Kadlec, Site Maintenance, Inc.

Property Owner Name: Harmony Village Homeowners Association

Common Property Address: See attached list of addresses

Common Location: The property is located east of Wolf Road, just south of Inland Drive.

Neighboring Property Land Use(s): North: Single-Family Residential
West: Single-Family Res./Multi-Family Residential
South: Multi-Family Residential
East: Multi-Family Residential

Existing Use of Property: Multi-Family Residential

Existing Property Zoning: R-4, Multiple Family Residential District

Previous Zoning Action on Property: None

DESCRIPTION OF PROPOSAL / APPEARANCE REVIEW

The petitioner is requesting minor site plan and appearance approval to replace the siding on all the townhomes and clubhouse in Harmony Village. Architectural plans for the work has been provided and includes ancillary work of the lintels, gutters, chimneys, and other minor features of the buildings. The petitioner will bring material and color samples of the siding to the meeting.

STAFF REVIEW

Impact on adjacent uses: There does not appear to be a negative impact on adjacent uses.

Planning Staff's Recommended Action: Staff recommends approval of the proposed minor façade modifications.

PROPOSED MOTION

If the Plan Commission approves of the proposed façade modifications, an appropriate motion would be to:

Approve of Docket No. PC 16-16 Minor Site Plan & Appearance Approval for modifications to the existing townhomes and clubhouse in accordance with the siding replacement plans (7 sheets) submitted October 27, 2016, by Waldman Engineering Consultants, Inc., on behalf of the Harmony Village Homeowners Association, for the properties located in the Harmony Village Subdivision, Wheeling, Illinois.

Andrew C. Jennings, AICP
Director of Community Development

Brooke Jones
Senior Planner

Attachments: Photos of existing conditions (staff)

List of all addresses in Harmony Village

Siding replacement plans (7 sheets)

Harmony Village

Docket No. PC 16-16 (Minor Site Plan and Appearance Approval of Facade Modifications)

Plan Commission Meeting – November 3, 2016

Existing conditions of typical homes

Harmony Village

Docket No. PC 16-16 (Minor Site Plan and Appearance Approval of Building Modifications)

Plan Commission Meeting – November 3, 2016

Existing conditions of typical homes

Harmony Village

Docket No. PC 16-16 (Minor Site Plan and Appearance Approval of Building Modifications)

Plan Commission Meeting – November 3, 2016

Existing conditions of typical homes

Harmony Village

1	448-460 Hickory Drive (7 Units)
2	403-413 Hickory Drive (6 Units)
3	455-461 Hickory Drive (4 Units)
4	407-419 Harmony Drive (7 Units)
5	450-460 Maple Drive (6 Units)
6	431-441 Maple Drive (6 Units)
7	447-455 Harmony Drive (6 Units)
8	459-469 Harmony Drive (6 Units)
9	481-491 Alder Drive (6 Units)
10	457-465 Alder Drive (5 Units)
11	439-449 Buckeye Drive (6 Units)
12	395-405 Poplar Drive (6 Units)
13	480-490 Poplar Drive (6 Units)
14	479-491 Rustic Drive (7 Units)
15	359-369 Rustic Drive (6 Units)
16	482-492 Rustic Drive (6 Units)
17	460-464 Beech Drive (3 Units)
18	352-356 Beech Drive (3 Units)
19	461-465 Beech Drive (3 Units)
20	458-464 Ferne Drive (4 Units)
21	361-367 Ferne Drive (4 Units)
22	442-450 Vista Drive (5 Units)
23	420-432 Ferne Drive (7 Units)
24	402-414 Honey Locusts Dr. (7 Units)
25	360-370 Honey Locusts Dr. (6 Units)
26	402-410 Elm Drive (5 Units)
27	390-396 Elm Drive (4 Units)
28	403-411 Elm Drive (5 Units)
29	400-412 Harmony Drive (7 Units)
30	399-407 Ferne Drive (3 Units)
31	383-393 Ferne Drive (6 Units)
32	366-372 Vita Drive (4 Units)
33	433-441 Poplar Drive (7 Units)
34	388-400 Poplar Drive (7 Units)
35	462-472 Buckeye Drive (6 Units)
36	440-446 Buckeye Drive (4 Units)
37	463-473 Buckeye Drive (6 Units)
38	462-472 Harmony Drive (6 Units)
39	448-458 Harmony Drive (6 Units)
40	443-451 Maple Drive (5 Units)
41	428-438 Maple Drive (6 Units)
42	Clubhouse - 1 Ferne Drive

HARMONY VILLAGE HOMEOWNERS ASSOCIATION, INC.
WHEELING, ILLINOIS 60090
SIDING REPLACEMENT PROJECT

WALDMAN ENGINEERING CONSULTANTS, INC

1240 IROQUOIS AVE, SUITE 506
NAPERVILLE, ILLINOIS 60564
TEL: 630-922-3000
FAX: 922-3003
WEB: www.WaldmanEng.com

ADOPTED BUILDING CODES

ALL WORK IS TO BE PERFORMED IN STRICT ACCORDANCE WITH THE FOLLOWING:

1. INTERNATIONAL RESIDENTIAL CODE, 2012
2. INTERNATIONAL BUILDING CODE, 2012
3. INTERNATIONAL ENERGY CONSERVATION CODE, 2012
4. INTERNATIONAL FUEL GAS CODE, 2012
5. INTERNATIONAL MECHANICAL CODE, 2012
6. NATIONAL ELECTRIC CODE, 2011
7. ILLINOIS STATE PLUMBING CODE, LATEST EDITION

THE DESIGN SHOWN ON THIS DRAWING IS INTENDED FOR THE NAMED STRUCTURE ONLY AND ANY USE FOR OTHER STRUCTURES IS EXPRESSLY FORBIDDEN WITHOUT THE WRITTEN CONSENT OF WALDMAN ENGINEERING. ANY CHANGES MADE TO THIS DRAWING BY OTHER THAN THE ENGINEERS AT WALDMAN ENGINEERING SHALL VOID THE DESIGN AND RELIEVE THE ENGINEERS OF ANY FURTHER RESPONSIBILITY.

THIS DRAWING COVERS THE DESIGN OF THE COMPLETED STRUCTURE ONLY, AND THE STRUCTURAL ENGINEERS DO NOT ASSUME ANY RESPONSIBILITY FOR ANY MEANS, METHODS OR TECHNIQUES OF CONSTRUCTION OR FOR IMPLEMENTATION OF ANY LOCAL, STATE, OR FEDERAL SAFETY REQUIREMENTS CONCERNING SAFETY OF WORKMEN OR ANY OTHERS ON OR ABOUT THE JOBSITE

THIS DRAWING IS THE PROPERTY OF WALDMAN ENGINEERING. IT IS FOR THE EXCLUSIVE USE OF THIS PROJECT. ANY RE-USE OF THIS DRAWING OR INFORMATION WITHOUT WRITTEN PERMISSION OF WALDMAN ENGINEERING IS PROHIBITED.

LIST OF DRAWINGS

DWG #	DESCRIPTION	REV. DATE
0	TITLE SHEET & SITE PLAN	2/09/16
1	BUILDING 14 PARTIAL FRONT ELEVATION	2/09/16
2	BUILDING 14 PARTIAL FRONT ELEVATION	2/09/16
3	BUILDING 14 PARTIAL REAR ELEVATION	2/09/16
4	BUILDING 14 PARTIAL REAR ELEVATION	2/09/16
5	BUILDING 14 RIGHT SIDE ELEVATION	2/09/16
6	BUILDING 14 LEFT SIDE ELEVATION	2/09/16
7	TYPICAL WINDOW AND DOOR FLASHING AND WALL ISOMETRIC DETAILS	8/28/15
7.1	TYPICAL SEPARATION WALL DETAILS	2/09/16
8	TYPICAL SIDING FLASHING DETAILS	8/28/15
9	TYPICAL SIDING FLASHING DETAILS	8/28/15
10	TYPICAL PRIVACY FENCE/HANDRAIL ATTACHMENT DETAILS	2/09/16
11	TYPICAL ROOF-TO-WALL FLASHING DETAILS	8/28/15
12	TYPICAL UNIT 1 PATIO INSET DETAILS	2/09/16
13	TYPICAL NEW PATIO DOOR FLASHING DETAILS	8/28/15
14	TYPICAL NEW PATIO DOOR PERIMETER BASE WALL FLASHING AND GABLE END EDGE DETAILS	12/11/15
15	TYPICAL UNIT 1 PATIO INSET HANDRAIL DETAILS	12/11/15
16	TYPICAL UNIT 1 SIDE ENTRY ROOF FLASHING DETAILS	2/09/16
17	TYPICAL GUTTER APRON DETAIL	12/11/15
18	TYPICAL BRICK REGLET FLASHING AND PRIVACY CAP FLASHING DETAILS	8/28/15
19	UNIT COST - TYPICAL CABLE CHASE DETAILS	12/11/15
20	GENERAL NOTES	2/09/16

2

NOTE:
AREA OF WORK AT BUILDINGS 1-41 AND THE CLUBHOUSE

0 SITE PLAN
NTS

N

Exhibit received October 27, 2016

2

GENERAL NOTES:

- CONTRACTOR TO FIELD VERIFY ALL MEASUREMENTS AND MATERIAL QUANTITIES
- WORK THESE DRAWINGS IN COMBINATION WITH THE SPECIFICATIONS DATED AUGUST 28, 2015
- CONTACT ENGINEER SHOULD DISCREPANCY BETWEEN DRAWINGS AND WRITTEN SPECIFICATIONS BE DISCOVERED
- ALL WORK TO COMPLY WITH CODES ADOPTED BY THE VILLAGE OF WHEELING
- ALL WORK TO BE PERFORMED IN WORKMAN LIKE MANNER MEETING ALL APPLICABLE INDUSTRY STANDARDS

LIST OF ADDRESSES

BLDG #	UNITS	BLDG TYPE
1	448-460	4-6-3-4-6-6-1
2	403-413	1-5-4-6-3-6
3	455-461	1-5-4-6
4	407-419	1-2-3-4-6-6-1
5	450-460	6-5-4-6-6-1
6	431-441	1-5-4-6-6-1
7	447-455	1-5-4-6-6-1
8	459-469	1-5-4-6-6-1
9	481-491	1-5-4-6-3-6
10	457-465	1-6-4-4-6
11	439-449	4-3-4-6-6-5

LIST OF ADDRESSES

BLDG #	UNITS	BLDG TYPE
12	395-405	4-5-2-3-6-3
13	480-490	1-5-4-4-3-1
14	479-491	1-2-3-4-5-6-5
15	359-369	6-4-6-4-6-5
16	482-492	4-6-4-6-4-6
17	460-464	6-6-1
18	352-356	6-4-6
19	461-465	6-4-5
20	458-464	6-4-6-5
21	361-367	1-6-6-4

LIST OF ADDRESSES

BLDG #	UNITS	BLDG TYPE
22	442-450	1-6-6-6-1
23	420-432	6-3-4-6-6-5-6
24	402-414	6-5-3-4-6-5-1
25	360-370	6-5-4-6-3-6
26	402-410	1-4-6-5-6
27	390-396	1-3-4-6
28	403-411	4-3-4-3-6
29	400-412	1-6-6-4-3-5-1
30	399-407	1-4-6-4-6
31	383-393	6-4-6-4-6-5

LIST OF ADDRESSES

BLDG #	UNITS	BLDG TYPE
32	366-372	6-6-6-4
33	433-441	6-4-6-6-4
34	388-400	1-6-3-4-3-6-1
35	462-472	1-5-4-6-4-3
36	440-446	1-3-4-1
37	463-473	6-5-4-6-6-6
38	462-472	1-6-6-4-6-4
39	448-458	6-4-6-4-6-6
40	443-451	4-6-4-6-4
41	428-438	4-6-4-6-4-6

REVISIONS

NO.	DESCRIPTION	DATE
1.	UPDATED LIST OF DRAWINGS REVISION DATES. ADDED SHEET 7.1: TYPICAL SEPARATION WALL DETAILS.	12/11/15
2.	UPDATED TITLE SHEET AND UNIT STYLES FOR BUILDING 38.	2/09/16

SIDING REPLACEMENT PROJECT

TITLE SHEET & SITE PLAN

HARMONY VILLAGE HOMEOWNERS ASSOCIATION, INC.
WHEELING, ILLINOIS 60090

PROJECT #:	15C-182
DRAWN BY:	MJN
APPROVED BY:	MAW
DATE:	AUGUST 28, 2015
SHEET NO:	0

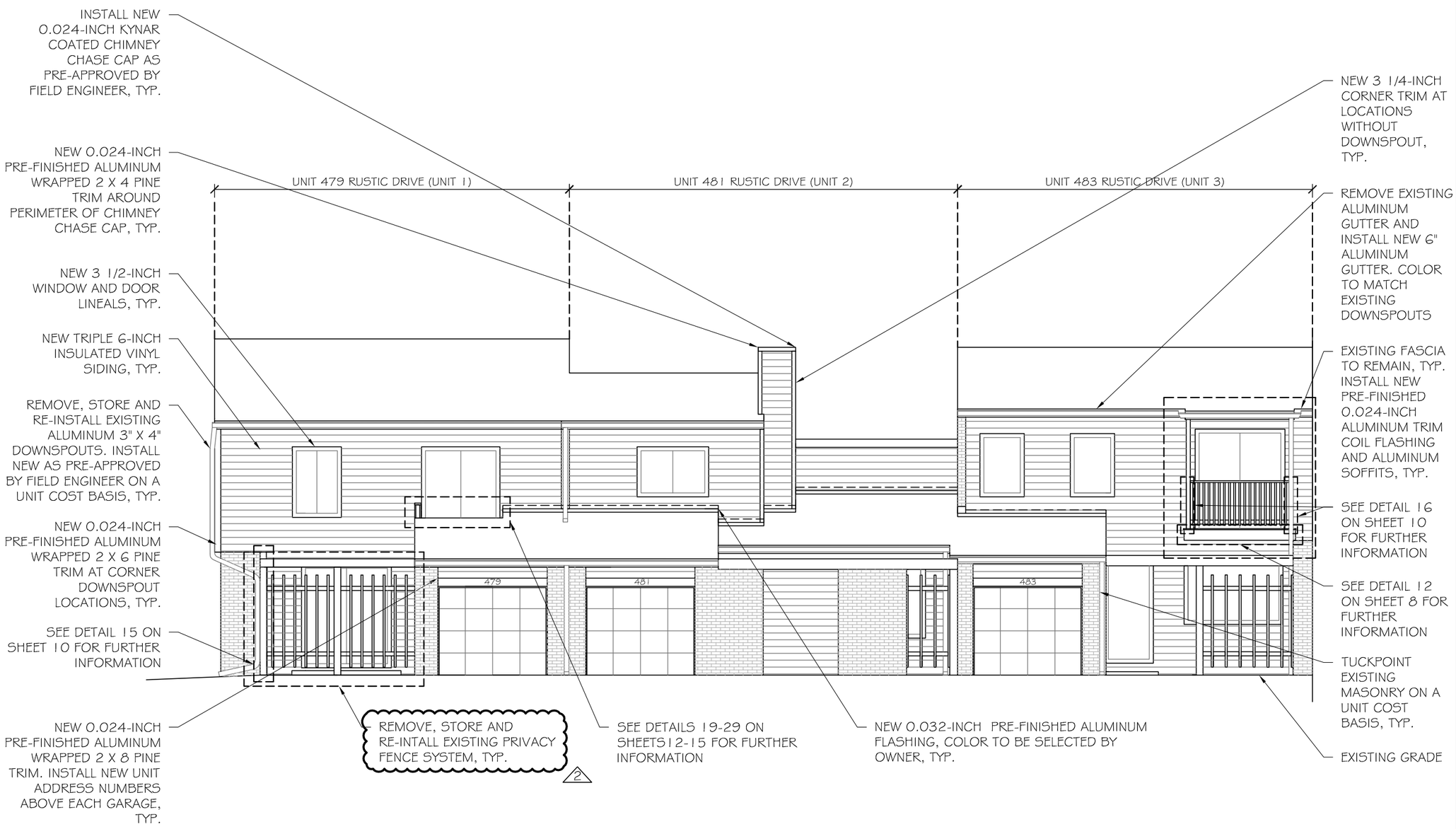

1 BUILDING 14 PARTIAL FRONT ELEVATION

SCALE: $\frac{1}{16}$" = 1'-0"

2

GENERAL NOTES:

- CONTRACTOR TO FIELD VERIFY ALL MEASUREMENTS AND MATERIAL QUANTITIES
- WORK THESE DRAWINGS IN COMBINATION WITH THE SPECIFICATIONS DATED AUGUST 28, 2015
- CONTACT ENGINEER SHOULD DISCREPANCY BETWEEN DRAWINGS AND WRITTEN SPECIFICATIONS BE DISCOVERED
- ALL WORK TO COMPLY WITH CODES ADOPTED BY THE VILLAGE OF WHEELING
- ALL WORK TO BE PERFORMED IN WORKMAN LIKE MANNER MEETING ALL APPLICABLE INDUSTRY STANDARDS

NOTES:

- CONTRACTOR TO FIELD VERIFY EXISTING CONDITIONS, DIMENSIONS AND MATERIALS.
- INSTALL ABOVE MATERIALS IN STRICT ACCORDANCE WITH MANUFACTURER'S WRITTEN INSTALLATION INSTRUCTIONS, TYP.

Exhibit received October 27, 2016

WALDMAN ENGINEERING CONSULTANTS, INC

1240 IROQUOIS AVE, SUITE 506

NAPERVILLE, ILLINOIS 60564

TEL: 630-922-3000

FAX: 922-3003

WEB: www.WaldmanEng.com

THE DESIGN SHOWN ON THIS DRAWING IS INTENDED FOR THE NAMED STRUCTURE ONLY AND ANY USE FOR OTHER STRUCTURES IS EXPRESSLY FORBIDDEN WITHOUT THE WRITTEN CONSENT OF WALDMAN ENGINEERING. ANY CHANGES MADE TO THIS DRAWING BY OTHER THAN THE ENGINEERS AT WALDMAN ENGINEERING SHALL VOID THE DESIGN AND RELIEVE THE ENGINEERS OF ANY FURTHER RESPONSIBILITY.

THIS DRAWING COVERS THE DESIGN OF THE COMPLETED STRUCTURE ONLY, AND THE STRUCTURAL ENGINEERS DO NOT ASSUME ANY RESPONSIBILITY FOR ANY MEANS, METHODS OR TECHNIQUES OF CONSTRUCTION OR FOR IMPLEMENTATION OF ANY LOCAL, STATE, OR FEDERAL SAFETY REQUIREMENTS CONCERNING SAFETY OF WORKMEN OR ANY OTHERS ON OR ABOUT THE JOBSITE

THIS DRAWING IS THE PROPERTY OF WALDMAN ENGINEERING. IT IS FOR THE EXCLUSIVE USE OF THIS PROJECT. ANY RE-USE OF THIS DRAWING OR INFORMATION WITHOUT WRITTEN PERMISSION OF WALDMAN ENGINEERING IS PROHIBITED.

REVISIONS

NO.	DESCRIPTION	DATE
2.	REVISED DETAIL 1.	2/09/16

SIDING REPLACEMENT PROJECT

BUILDING 14 PARTIAL FRONT ELEVATION

HARMONY VILLAGE HOMEOWNERS ASSOCIATION, INC.
WHEELING, ILLINOIS 60090

PROJECT #:	15C-182
DRAWN BY:	MJN
APPROVED BY:	MAW
DATE:	AUGUST 28, 2015
SHEET NO:	1

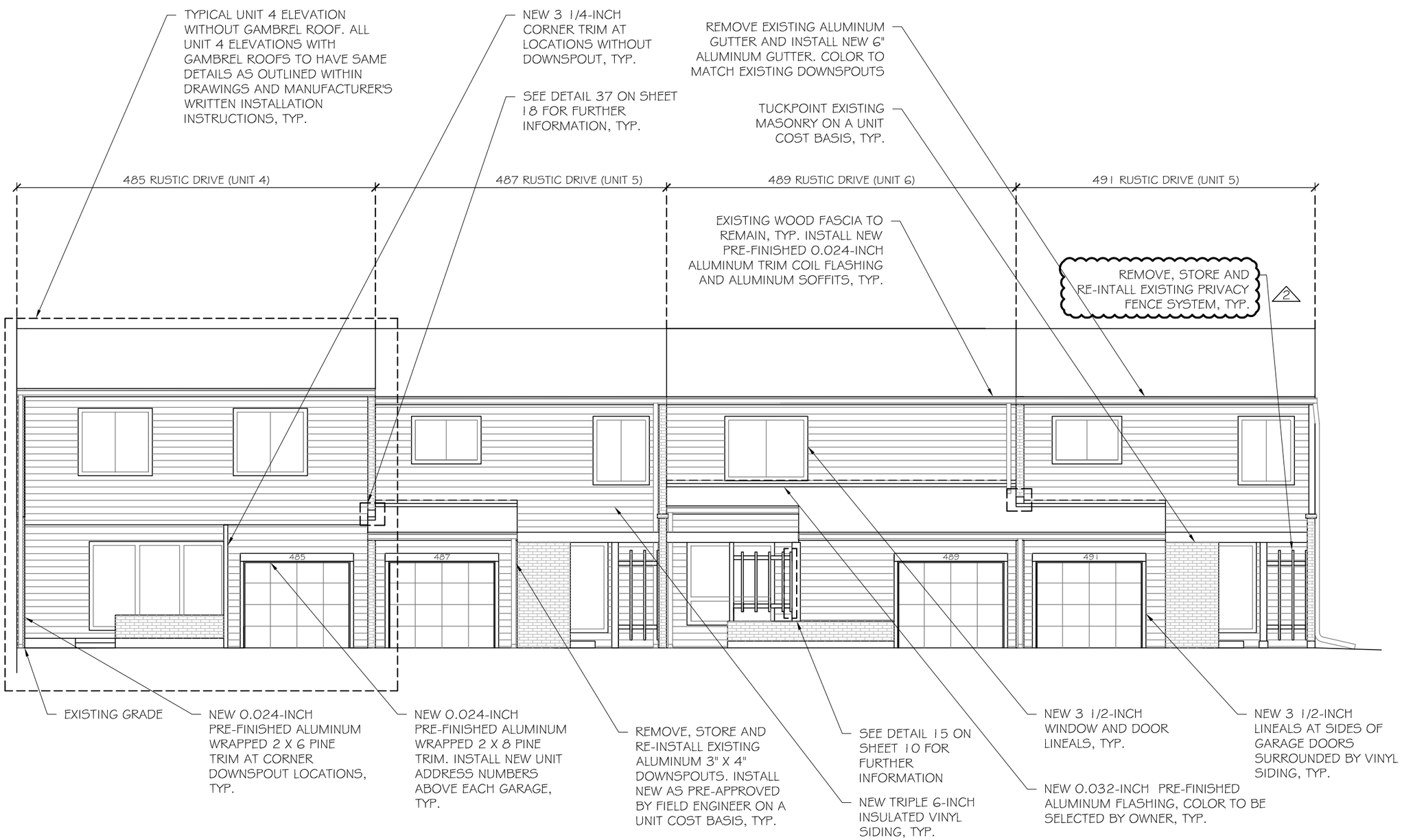

2 BUILDING 14 PARTIAL FRONT ELEVATION

SCALE: $\frac{1}{16}$" = 1'-0"

2

GENERAL NOTES:

- CONTRACTOR TO FIELD VERIFY ALL MEASUREMENTS AND MATERIAL QUANTITIES
- WORK THESE DRAWINGS IN COMBINATION WITH THE SPECIFICATIONS DATED AUGUST 28, 2015
- CONTACT ENGINEER SHOULD DISCREPANCY BETWEEN DRAWINGS AND WRITTEN SPECIFICATIONS BE DISCOVERED
- ALL WORK TO COMPLY WITH CODES ADOPTED BY THE VILLAGE OF WHEELING
- ALL WORK TO BE PERFORMED IN WORKMAN LIKE MANNER MEETING ALL APPLICABLE INDUSTRY STANDARDS

NOTES:

- CONTRACTOR TO FIELD VERIFY EXISTING CONDITIONS, DIMENSIONS AND MATERIALS.
- INSTALL ABOVE MATERIALS IN STRICT ACCORDANCE WITH MANUFACTURER'S WRITTEN INSTALLATION INSTRUCTIONS, TYP.

Exhibit received October 27, 2016

WALDMAN ENGINEERING CONSULTANTS, INC

1240 IROQUOIS AVE, SUITE 506

NAPERVILLE, ILLINOIS 60564

TEL: 630-922-3000

FAX: 922-3003

WEB: www.WaldmanEng.com

THE DESIGN SHOWN ON THIS DRAWING IS INTENDED FOR THE NAMED STRUCTURE ONLY AND ANY USE FOR OTHER STRUCTURES IS EXPRESSLY FORBIDDEN WITHOUT THE WRITTEN CONSENT OF WALDMAN ENGINEERING. ANY CHANGES MADE TO THIS DRAWING BY OTHER THAN THE ENGINEERS AT WALDMAN ENGINEERING SHALL VOID THE DESIGN AND RELIEVE THE ENGINEERS OF ANY FURTHER RESPONSIBILITY.

THIS DRAWING COVERS THE DESIGN OF THE COMPLETED STRUCTURE ONLY, AND THE STRUCTURAL ENGINEERS DO NOT ASSUME ANY RESPONSIBILITY FOR ANY MEANS, METHODS OR TECHNIQUES OF CONSTRUCTION OR FOR IMPLEMENTATION OF ANY LOCAL, STATE, OR FEDERAL SAFETY REQUIREMENTS CONCERNING SAFETY OF WORKMEN OR ANY OTHERS ON OR ABOUT THE JOBSITE

THIS DRAWING IS THE PROPERTY OF WALDMAN ENGINEERING. IT IS FOR THE EXCLUSIVE USE OF THIS PROJECT. ANY RE-USE OF THIS DRAWING OR INFORMATION WITHOUT WRITTEN PERMISSION OF WALDMAN ENGINEERING IS PROHIBITED.

REVISIONS

NO.	DESCRIPTION	DATE
2.	REVISED DETAIL 2.	2/09/16

SIDING REPLACEMENT PROJECT

BUILDING 14 PARTIAL FRONT ELEVATION

HARMONY VILLAGE HOMEOWNERS ASSOCIATION, INC.
WHEELING, ILLINOIS 60090

PROJECT #:	15C-182
DRAWN BY:	MJN
APPROVED BY:	MAW
DATE:	AUGUST 28, 2015
SHEET NO:	2

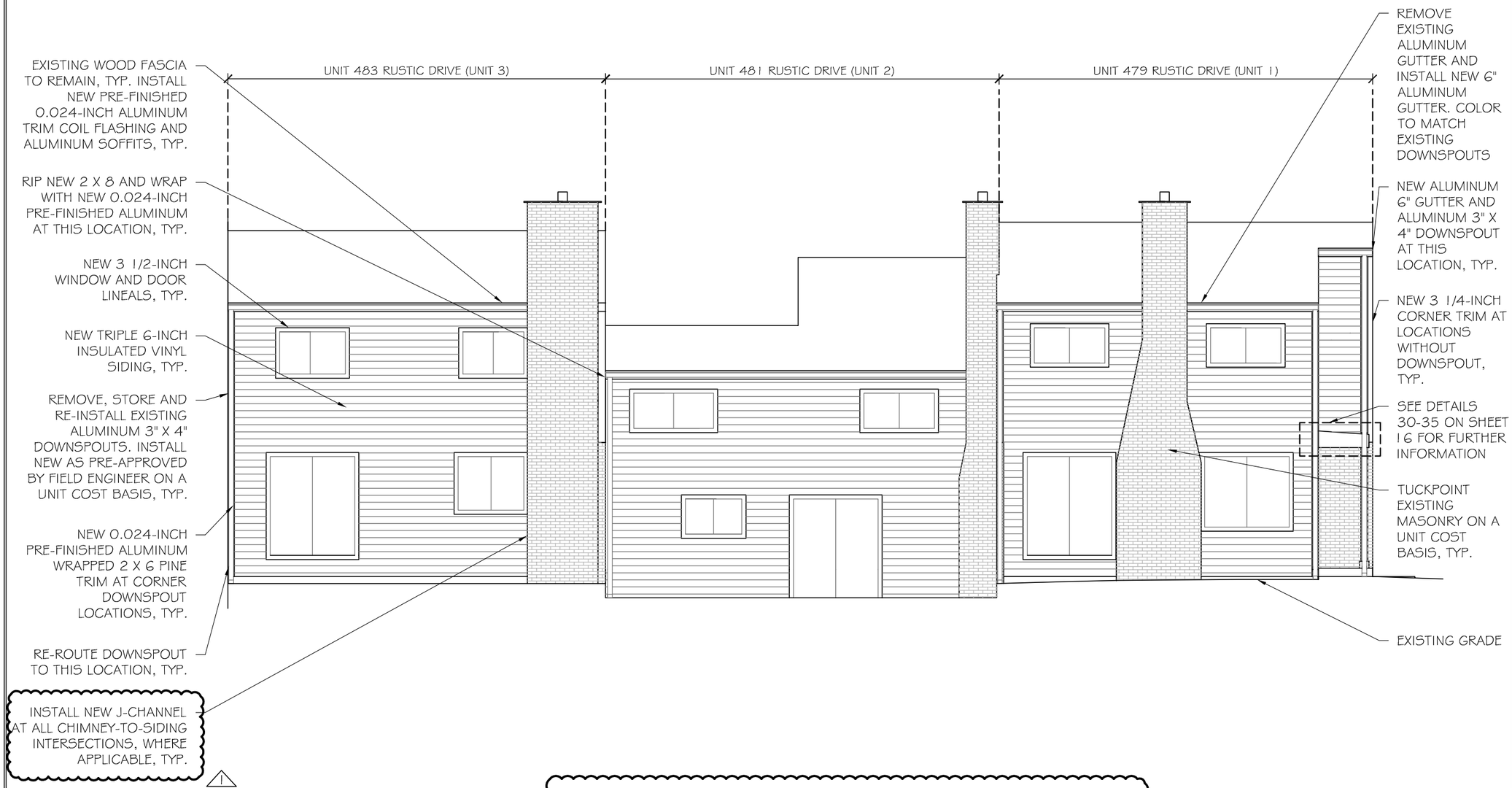

3 BUILDING 14 PARTIAL REAR ELEVATION

SCALE: $\frac{1}{16}$" = 1'-0"

2

GENERAL NOTES:

- CONTRACTOR TO FIELD VERIFY ALL MEASUREMENTS AND MATERIAL QUANTITIES
- WORK THESE DRAWINGS IN COMBINATION WITH THE SPECIFICATIONS DATED AUGUST 28, 2015
- CONTACT ENGINEER SHOULD DISCREPANCY BETWEEN DRAWINGS AND WRITTEN SPECIFICATIONS BE DISCOVERED
- ALL WORK TO COMPLY WITH CODES ADOPTED BY THE VILLAGE OF WHEELING
- ALL WORK TO BE PERFORMED IN WORKMAN LIKE MANNER MEETING ALL APPLICABLE INDUSTRY STANDARDS

NOTES:

- CONTRACTOR TO FIELD VERIFY EXISTING CONDITIONS, DIMENSIONS AND MATERIALS.
- INSTALL ABOVE MATERIALS IN STRICT ACCORDANCE WITH MANUFACTURER'S WRITTEN INSTALLATION INSTRUCTIONS, TYP.

Exhibit received October 27, 2016

WALDMAN ENGINEERING CONSULTANTS, INC

1240 IROQUOIS AVE, SUITE 506
NAPERVILLE, ILLINOIS 60564
TEL: 630-922-3000
FAX: 922-3003
WEB: www.WaldmanEng.com

THE DESIGN SHOWN ON THIS DRAWING IS INTENDED FOR THE NAMED STRUCTURE ONLY AND ANY USE FOR OTHER STRUCTURES IS EXPRESSLY FORBIDDEN WITHOUT THE WRITTEN CONSENT OF WALDMAN ENGINEERING. ANY CHANGES MADE TO THIS DRAWING BY OTHER THAN THE ENGINEERS AT WALDMAN ENGINEERING SHALL VOID THE DESIGN AND RELIEVE THE ENGINEERS OF ANY FURTHER RESPONSIBILITY.

THIS DRAWING COVERS THE DESIGN OF THE COMPLETED STRUCTURE ONLY, AND THE STRUCTURAL ENGINEERS DO NOT ASSUME ANY RESPONSIBILITY FOR ANY MEANS, METHODS OR TECHNIQUES OF CONSTRUCTION OR FOR IMPLEMENTATION OF ANY LOCAL, STATE, OR FEDERAL SAFETY REQUIREMENTS CONCERNING SAFETY OF WORKMEN OR ANY OTHERS ON OR ABOUT THE JOBSITE

THIS DRAWING IS THE PROPERTY OF WALDMAN ENGINEERING. IT IS FOR THE EXCLUSIVE USE OF THIS PROJECT. ANY RE-USE OF THIS DRAWING OR INFORMATION WITHOUT WRITTEN PERMISSION OF WALDMAN ENGINEERING IS PROHIBITED.

REVISIONS

NO.	DESCRIPTION	DATE
1.	ADDED NOTE TO DETAIL 3.	12/11/15
2.	REVISED DETAIL 3.	2/09/16

SIDING REPLACEMENT PROJECT

BUILDING 14 PARTIAL REAR ELEVATION

HARMONY VILLAGE HOMEOWNERS ASSOCIATION, INC.
WHEELING, ILLINOIS 60090

PROJECT #:	15C-182
DRAWN BY:	MJN
APPROVED BY:	MAW
DATE:	AUGUST 28, 2015
SHEET NO:	3

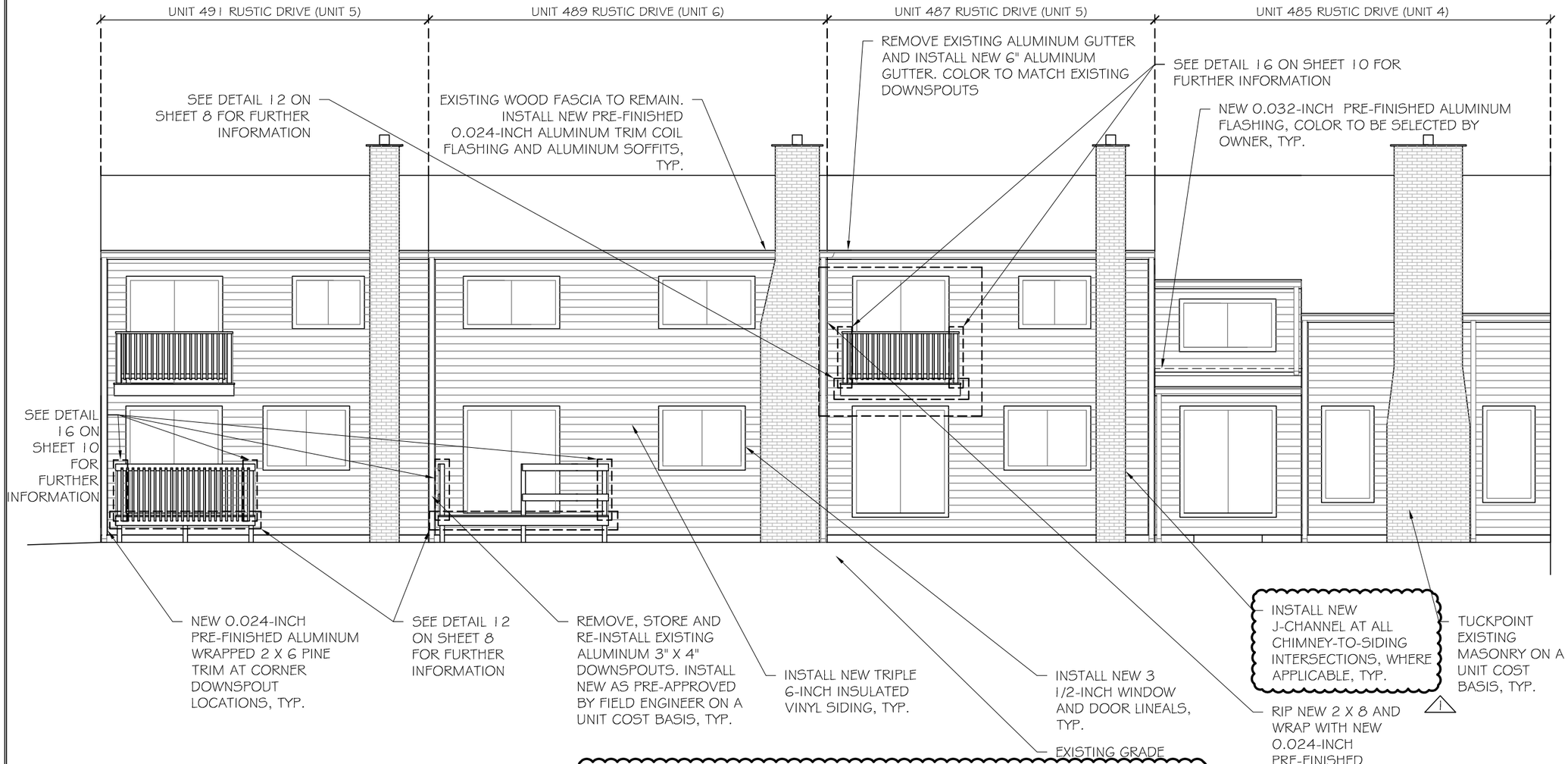

4 BUILDING 14 PARTIAL REAR ELEVATION

SCALE: $\frac{1}{16}$" = 1'-0"

2

GENERAL NOTES:

- CONTRACTOR TO FIELD VERIFY ALL MEASUREMENTS AND MATERIAL QUANTITIES
- WORK THESE DRAWINGS IN COMBINATION WITH THE SPECIFICATIONS DATED AUGUST 28, 2015
- CONTACT ENGINEER SHOULD DISCREPANCY BETWEEN DRAWINGS AND WRITTEN SPECIFICATIONS BE DISCOVERED
- ALL WORK TO COMPLY WITH CODES ADOPTED BY THE VILLAGE OF WHEELING
- ALL WORK TO BE PERFORMED IN WORKMAN LIKE MANNER MEETING ALL APPLICABLE INDUSTRY STANDARDS

NOTES:

- CONTRACTOR TO FIELD VERIFY EXISTING CONDITIONS, DIMENSIONS AND MATERIALS.
- INSTALL ABOVE MATERIALS IN STRICT ACCORDANCE WITH MANUFACTURER'S WRITTEN INSTALLATION INSTRUCTIONS, TYP.

Exhibit received October 27, 2016

WALDMAN ENGINEERING CONSULTANTS, INC

1240 IROQUOIS AVE, SUITE 506
NAPERVILLE, ILLINOIS 60564
TEL: 630-922-3000
FAX: 922-3003
WEB: www.WaldmanEng.com

THE DESIGN SHOWN ON THIS DRAWING IS INTENDED FOR THE NAMED STRUCTURE ONLY AND ANY USE FOR OTHER STRUCTURES IS EXPRESSLY FORBIDDEN WITHOUT THE WRITTEN CONSENT OF WALDMAN ENGINEERING. ANY CHANGES MADE TO THIS DRAWING BY OTHER THAN THE ENGINEERS AT WALDMAN ENGINEERING SHALL VOID THE DESIGN AND RELIEVE THE ENGINEERS OF ANY FURTHER RESPONSIBILITY.

THIS DRAWING COVERS THE DESIGN OF THE COMPLETED STRUCTURE ONLY, AND THE STRUCTURAL ENGINEERS DO NOT ASSUME ANY RESPONSIBILITY FOR ANY MEANS, METHODS OR TECHNIQUES OF CONSTRUCTION OR FOR IMPLEMENTATION OF ANY LOCAL, STATE, OR FEDERAL SAFETY REQUIREMENTS CONCERNING SAFETY OF WORKMEN OR ANY OTHERS ON OR ABOUT THE JOBSITE

THIS DRAWING IS THE PROPERTY OF WALDMAN ENGINEERING. IT IS FOR THE EXCLUSIVE USE OF THIS PROJECT. ANY RE-USE OF THIS DRAWING OR INFORMATION WITHOUT WRITTEN PERMISSION OF WALDMAN ENGINEERING IS PROHIBITED.

REVISIONS

NO.	DESCRIPTION	DATE
1.	ADDED NOTE TO DETAIL 4.	12/11/15
2.	REVISED DETAIL 4.	2/09/16

SIDING REPLACEMENT PROJECT

BUILDING 14 PARTIAL REAR ELEVATION

HARMONY VILLAGE HOMEOWNERS ASSOCIATION, INC.
WHEELING, ILLINOIS 60090

PROJECT #:	15C-182
DRAWN BY:	MJN
APPROVED BY:	MAW
DATE:	AUGUST 28, 2015
SHEET NO:	4

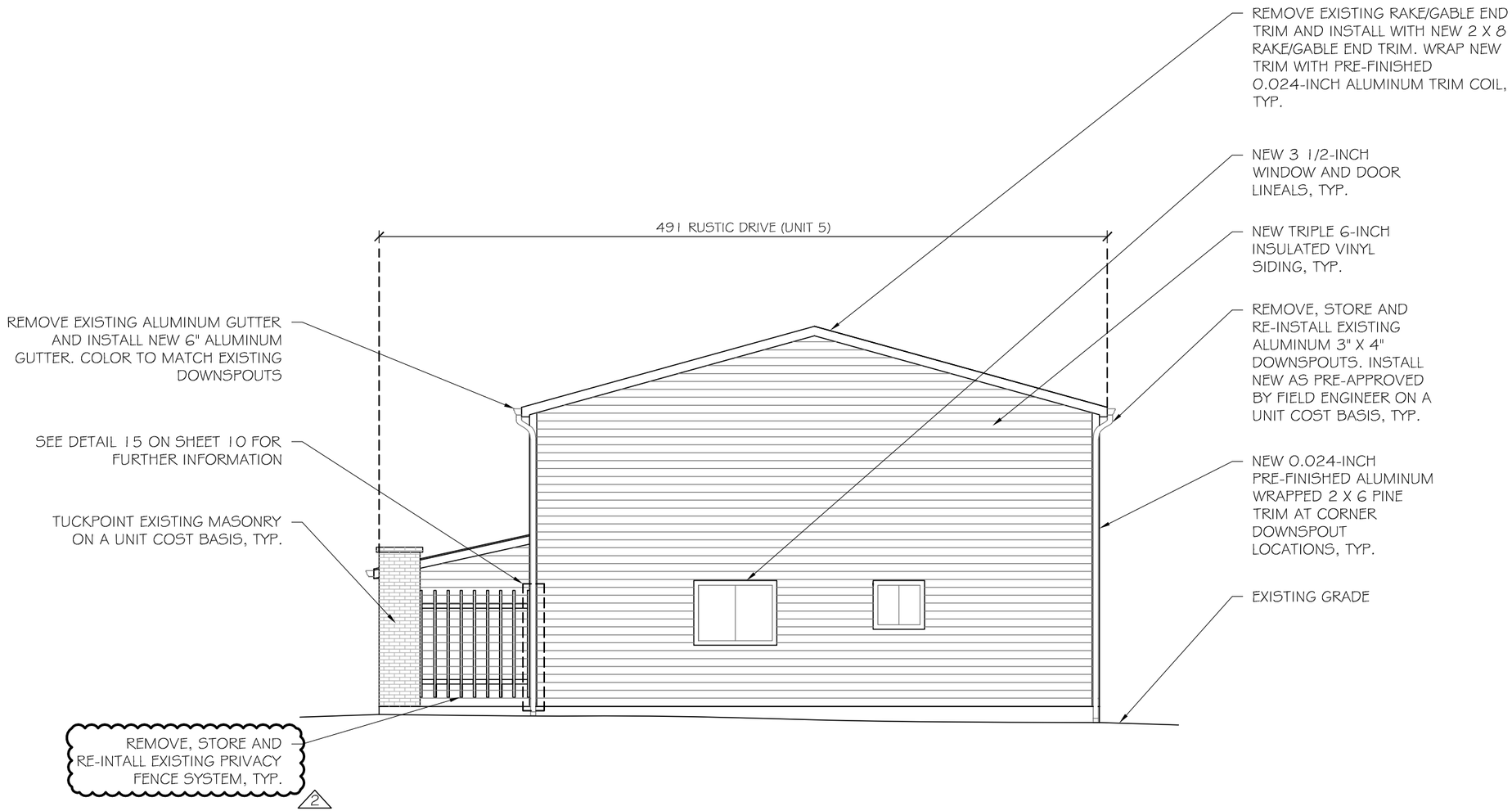

5 BUILDING 14 RIGHT SIDE ELEVATION

SCALE: $\frac{1}{16}$" = 1'-0"

GENERAL NOTES:

- CONTRACTOR TO FIELD VERIFY ALL MEASUREMENTS AND MATERIAL QUANTITIES
- WORK THESE DRAWINGS IN COMBINATION WITH THE SPECIFICATIONS DATED AUGUST 28, 2015
- CONTACT ENGINEER SHOULD DISCREPANCY BETWEEN DRAWINGS AND WRITTEN SPECIFICATIONS BE DISCOVERED
- ALL WORK TO COMPLY WITH CODES ADOPTED BY THE VILLAGE OF WHEELING
- ALL WORK TO BE PERFORMED IN WORKMAN LIKE MANNER MEETING ALL APPLICABLE INDUSTRY STANDARDS

NOTES:

- CONTRACTOR TO FIELD VERIFY EXISTING CONDITIONS, DIMENSIONS AND MATERIALS.
- INSTALL ABOVE MATERIALS IN STRICT ACCORDANCE WITH MANUFACTURER'S WRITTEN INSTALLATION INSTRUCTIONS, TYP.

Exhibit received October 27, 2016

WALDMAN ENGINEERING CONSULTANTS, INC

1240 IROQUOIS AVE, SUITE 506
NAPERVILLE, ILLINOIS 60564
TEL: 630-922-3000
FAX: 922-3003
WEB: www.WaldmanEng.com

THE DESIGN SHOWN ON THIS DRAWING IS INTENDED FOR THE NAMED STRUCTURE ONLY AND ANY USE FOR OTHER STRUCTURES IS EXPRESSLY FORBIDDEN WITHOUT THE WRITTEN CONSENT OF WALDMAN ENGINEERING. ANY CHANGES MADE TO THIS DRAWING BY OTHER THAN THE ENGINEERS AT WALDMAN ENGINEERING SHALL VOID THE DESIGN AND RELIEVE THE ENGINEERS OF ANY FURTHER RESPONSIBILITY.

THIS DRAWING COVERS THE DESIGN OF THE COMPLETED STRUCTURE ONLY, AND THE STRUCTURAL ENGINEERS DO NOT ASSUME ANY RESPONSIBILITY FOR ANY MEANS, METHODS OR TECHNIQUES OF CONSTRUCTION OR FOR IMPLEMENTATION OF ANY LOCAL, STATE, OR FEDERAL SAFETY REQUIREMENTS CONCERNING SAFETY OF WORKMEN OR ANY OTHERS ON OR ABOUT THE JOBSITE

THIS DRAWING IS THE PROPERTY OF WALDMAN ENGINEERING. IT IS FOR THE EXCLUSIVE USE OF THIS PROJECT. ANY RE-USE OF THIS DRAWING OR INFORMATION WITHOUT WRITTEN PERMISSION OF WALDMAN ENGINEERING IS PROHIBITED.

REVISIONS

NO.	DESCRIPTION	DATE
2.	REVISED DETAIL 5.	2/09/16

SIDING REPLACEMENT PROJECT

BUILDING 14 RIGHT SIDE ELEVATION

HARMONY VILLAGE HOMEOWNERS ASSOCIATION, INC.
WHEELING, ILLINOIS 60090

PROJECT #:	15C-182
DRAWN BY:	MJN
APPROVED BY:	MAW
DATE:	AUGUST 28, 2015
SHEET NO:	5

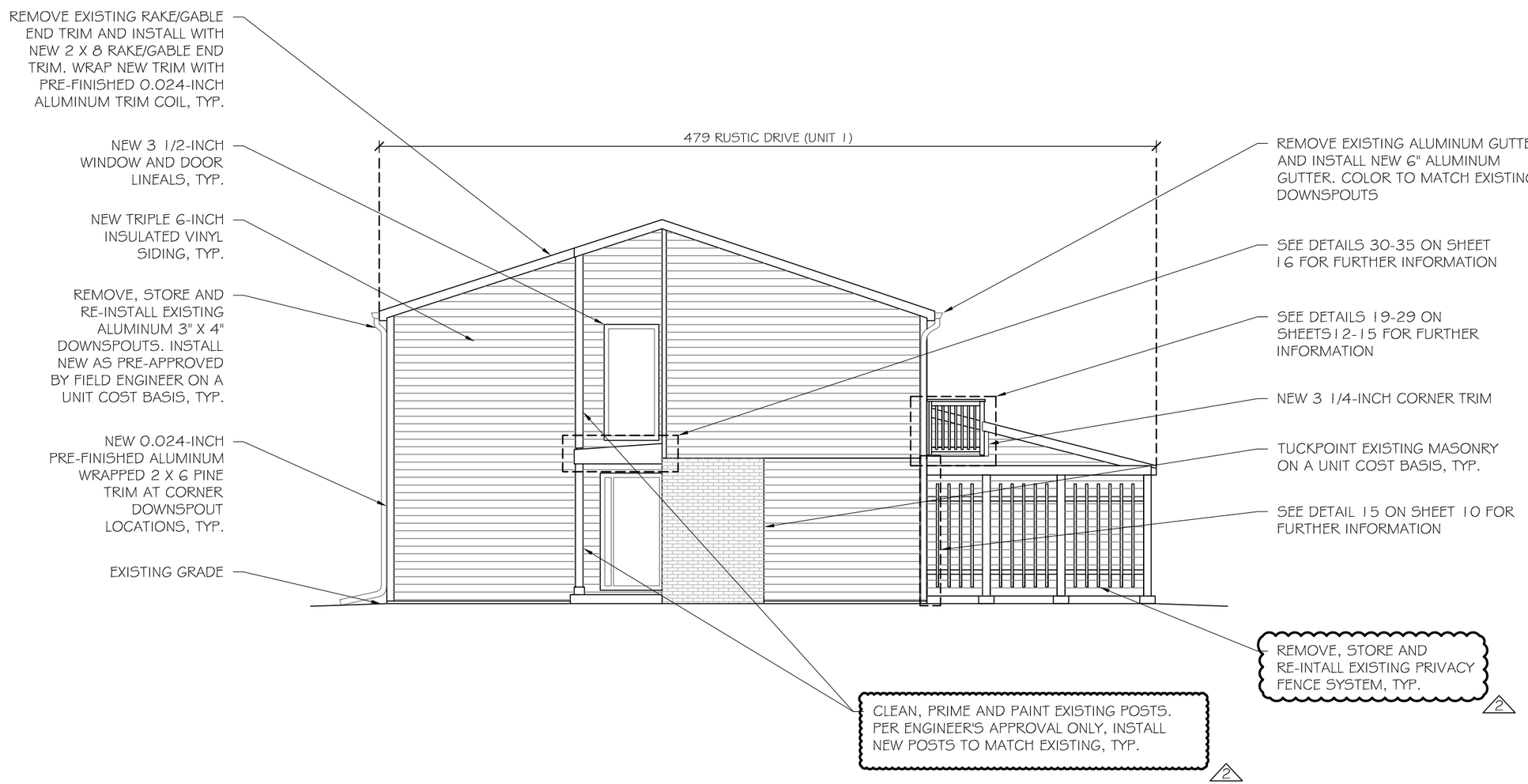

6 BUILDING 14 LEFT SIDE ELEVATION

SCALE: $\frac{1}{16}$" = 1'-0"

2

GENERAL NOTES:

- CONTRACTOR TO FIELD VERIFY ALL MEASUREMENTS AND MATERIAL QUANTITIES
- WORK THESE DRAWINGS IN COMBINATION WITH THE SPECIFICATIONS DATED AUGUST 28, 2015
- CONTACT ENGINEER SHOULD DISCREPANCY BETWEEN DRAWINGS AND WRITTEN SPECIFICATIONS BE DISCOVERED
- ALL WORK TO COMPLY WITH CODES ADOPTED BY THE VILLAGE OF WHEELING
- ALL WORK TO BE PERFORMED IN WORKMAN LIKE MANNER MEETING ALL APPLICABLE INDUSTRY STANDARDS

NOTES:

- CONTRACTOR TO FIELD VERIFY EXISTING CONDITIONS, DIMENSIONS AND MATERIALS.
- INSTALL ABOVE MATERIALS IN STRICT ACCORDANCE WITH MANUFACTURER'S WRITTEN INSTALLATION INSTRUCTIONS, TYP.

Exhibit received October 27, 2016

WALDMAN ENGINEERING CONSULTANTS, INC

1240 IROQUOIS AVE, SUITE 506
NAPERVILLE, ILLINOIS 60564
TEL: 630-922-3000
FAX: 922-3003
WEB: www.WaldmanEng.com

THE DESIGN SHOWN ON THIS DRAWING IS INTENDED FOR THE NAMED STRUCTURE ONLY AND ANY USE FOR OTHER STRUCTURES IS EXPRESSLY FORBIDDEN WITHOUT THE WRITTEN CONSENT OF WALDMAN ENGINEERING. ANY CHANGES MADE TO THIS DRAWING BY OTHER THAN THE ENGINEERS AT WALDMAN ENGINEERING SHALL VOID THE DESIGN AND RELIEVE THE ENGINEERS OF ANY FURTHER RESPONSIBILITY.

THIS DRAWING COVERS THE DESIGN OF THE COMPLETED STRUCTURE ONLY, AND THE STRUCTURAL ENGINEERS DO NOT ASSUME ANY RESPONSIBILITY FOR ANY MEANS, METHODS OR TECHNIQUES OF CONSTRUCTION OR FOR IMPLEMENTATION OF ANY LOCAL, STATE, OR FEDERAL SAFETY REQUIREMENTS CONCERNING SAFETY OF WORKMEN OR ANY OTHERS ON OR ABOUT THE JOBSITE

THIS DRAWING IS THE PROPERTY OF WALDMAN ENGINEERING. IT IS FOR THE EXCLUSIVE USE OF THIS PROJECT. ANY RE-USE OF THIS DRAWING OR INFORMATION WITHOUT WRITTEN PERMISSION OF WALDMAN ENGINEERING IS PROHIBITED.

REVISIONS

NO.	DESCRIPTION	DATE
1.	ADDED NOTE TO DETAIL 6.	12/11/15
2.	REVISED DETAIL 6.	2/09/16

SIDING REPLACEMENT PROJECT

BUILDING 14 LEFT SIDE ELEVATION

HARMONY VILLAGE HOMEOWNERS ASSOCIATION, INC.
WHEELING, ILLINOIS 60090

PROJECT #:	15C-182
DRAWN BY:	MJN
APPROVED BY:	MAW
DATE:	AUGUST 28, 2015
SHEET NO:	6