CONCENTRIC CONE CAN BE USED INSTEAD OF ECCENTRIC CONE

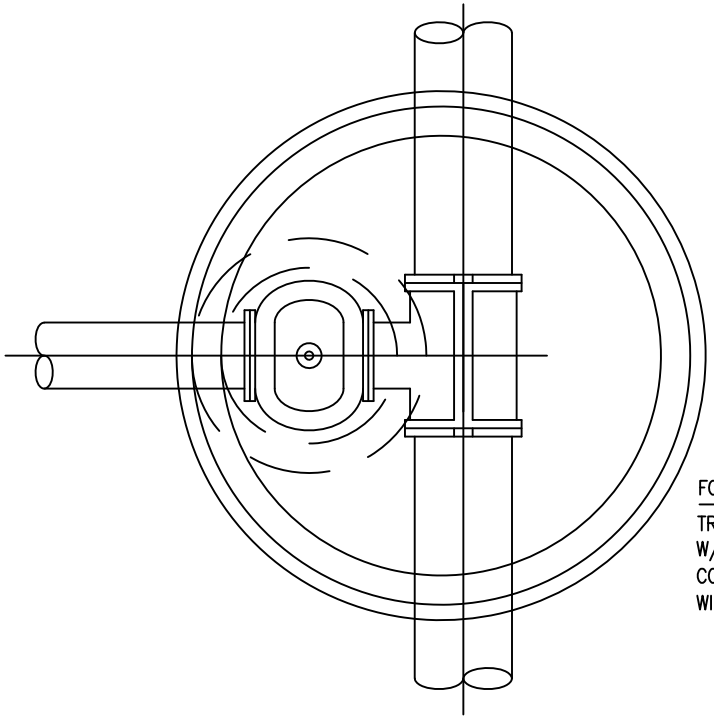

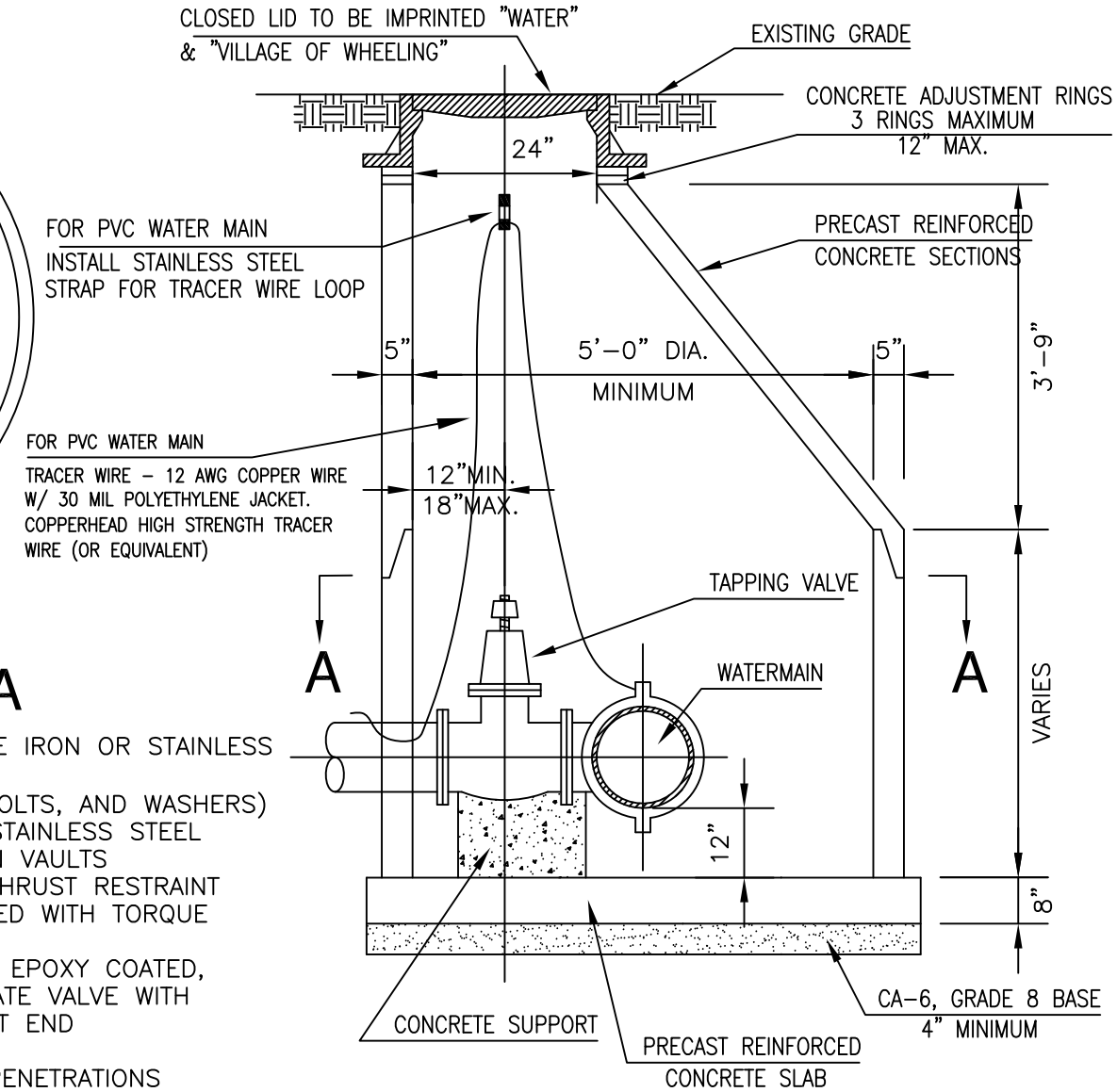

SECTION A - A

NOTE:

1. THE TAPPING SLEEVE SHALL BE DUCTILE IRON OR STAINLESS STEEL
2. ALL FASTENER HARDWARE (i.e. NUTS, BOLTS, AND WASHERS) ASSOCIATED WITH THIS TAP SHALL BE STAINLESS STEEL
3. STEPS ARE NOT ALLOWED IN WATERMAIN VAULTS
4. THE VALVE SHALL BE RESTRAINED BY THRUST RESTRAINT WEDGE, RETAINER GLANDS MANUFACTURED WITH TORQUE LIMITING TWIST-OFF NUTS
5. TAPPING VALVE SHALL BE FULL BODIED EPOXY COATED, NON-RISING STEM, RESILIENT WEDGE GATE VALVE WITH 1-FLANGE END AND 1-MECHANICAL JOINT END
6. VALVE VAULT SHALL BE WATER-TIGHT
7. PROVIDE KOR-N-SEAL BOOTS AT ALL PENETRATIONS

VILLAGE OF WHEELING ILLINOIS	VILLAGE OF WHEELING ENGINEERING DIVISION 2 COMMUNITY BOULEVARD WHEELING, IL 60090 WWW.WHEELINGIL.GOV	VALVE & TAPPING VAULT STANDARD	VILLAGE OF WHEELING SPECIFICATIONS AND DETAILS FILE LOCATION T:\ENGINEERING\STANDARDS	REVISIONS S.W. 4-12-00 AUTOCAD FILE C.C. 03-07-07 PER COMMENTS S.W. 08-15-08 CONCENTRIC CONE K.A.G. 01-03-18 TRACER WIRE
				DETAIL NO. W-4